REVISIONS

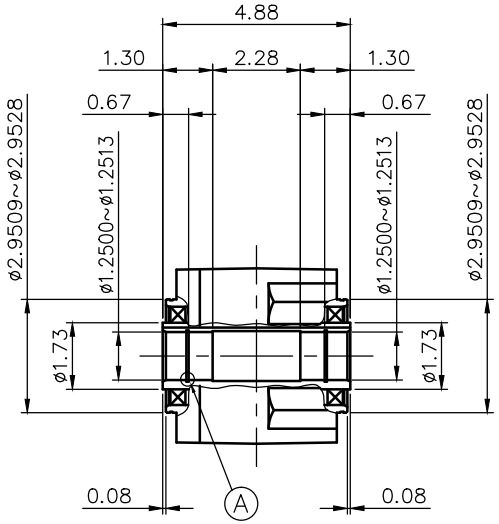

DETAIL OF OUTPUT SHAFT

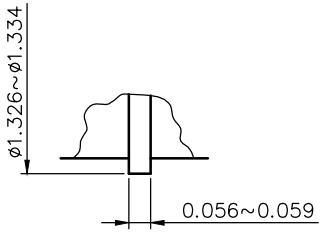

DETAIL OF : A

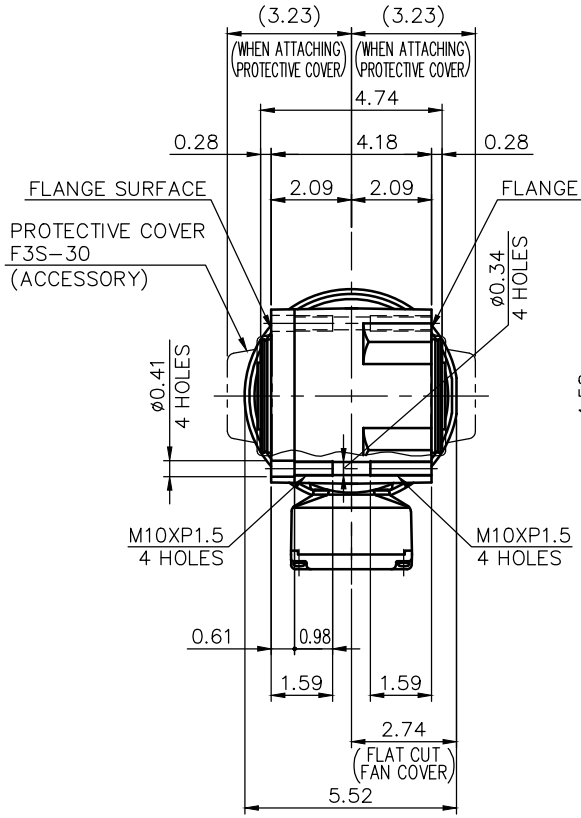

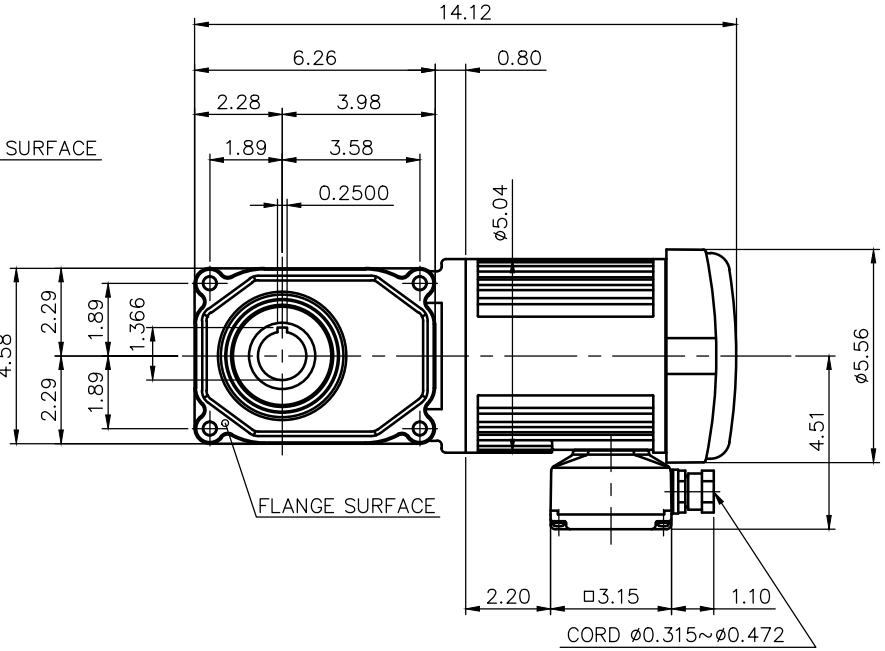

NOTE: THE RATING OF ENCLOSURE CLASS: IP65 (EN60034-5) EQUIVALENT.
NOTE: OUTPUT SHAFT MATERIAL: SUS420J2
NOTE: THIS MOTOR IS AFFIXED WITH CE MARKING.
NOTE: THE GROUND LEAD SHOULD BE LONGER THAN THE SUPPLY LEAD FOR THE MOTOR.
NOTE: THIS MOTOR IS UL CERTIFIED MODEL.(UL1004-1)
NOTE: UL-LISTED MODEL NAME: WF4AEN

MOTOR SPECIFICATION

TYPE	3-PHASE INDUCTION MOTOR
FORM	TOTALLY ENCLOSED FAN COOLED
OUT PUT	1/2 HP
VOLTAGE	208/230/460/400 V
FREQ.	60/60/60/50 Hz
POLES	4
ROTATIONAL FREQUENCY	1800/1800/1800/1500 rpm
RATING	S1 CONT.
INS.CLASS	F

REDUCER SPECIFICATION

TYPE	GTR
FORM	30
RATIO	1/5 1/7.5 1/10 1/12.5
	1/15 1/20 1/25 1/30
	1/40 1/50 1/60
LUBRICATION	GREASE

TITLE	F3S30S5~60-WF4AEN DIMENSION OF MODEL				
DRAWING NO.	F3S30S-WF4AEN				
USER					
NOTICE					
APPROVE	Y.Ikeda	SCALE		UNIT	DATE
CHECK	M.Iijima	1/5		in	2015.07.15
DESIGN	Y.Miura		NISSEI CORPORATION		