REVISIONS

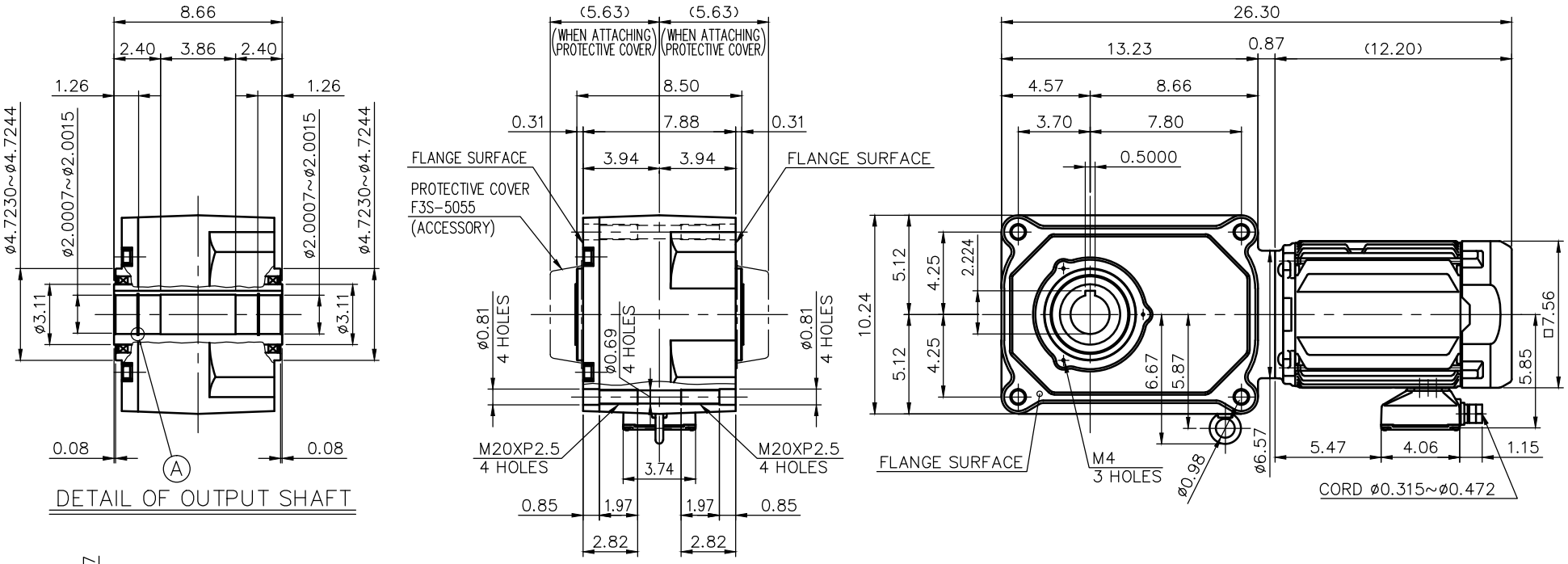

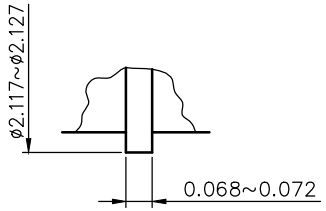

DETAIL OF : A

NOTE: THE RATING OF ENCLOSURE CLASS: IP65 (EN60034-5) EQUIVALENT.
NOTE: OUTPUT SHAFT MATERIAL: SUS420J2

NOTE: COMPLIANCE CERTIFICATION NUMBER: CC303B
NOTE: FIX THE PROTECTIVE COVER (ACCESSORY) ON M4 (3 HOLES) USE ROUND-HEAD SCREWS (ACCESSORY,3PCE)
NOTE: THIS MOTOR IS AFFIXED WITH CE MARKING.
NOTE: THE GROUND LEAD SHOULD BE LONGER THAN THE SUPPLY LEAD FOR THE MOTOR.
NOTE: THIS MOTOR IS UL CERTIFIED MODEL. (UL1004-1)
NOTE: UL-LISTED MODEL NAME: WV9AWN

MOTOR SPECIFICATION

TYPE	3-PHASE INDUCTION MOTOR
FORM	TOTALLY ENCLOSED FAN COOLED P9
OUT PUT	3 HP
VOLTAGE	208/230/460/400 V
FREQ.	60/60/60/50 Hz
POLES	4
ROTATIONAL FREQUENCY	1800/1800/1800/1500 rpm
EFFICIENCY CLASS	IE3 EN60034-30 Standard
RATING	S1 CONT.
INS.CLASS	F

REDUCER SPECIFICATION

TYPE	GTR
FORM	55
RATIO	1/80 1/100 1/120
LUBRICATION	GREASE

TITLE	F3S55S80~120-WV9AWN DIMENSION OF MODEL			
DRAWING NO.	F3S55S-WV9AWN			
USER				
NOTICE				
APPROVE	Y.Ikeda	SCALE	UNIT	DATE
CHECK	M.Iijima	1/8	in	2016.04.01
DESIGN	Y.Miura		NISSEI CORPORATION	