REVISIONS

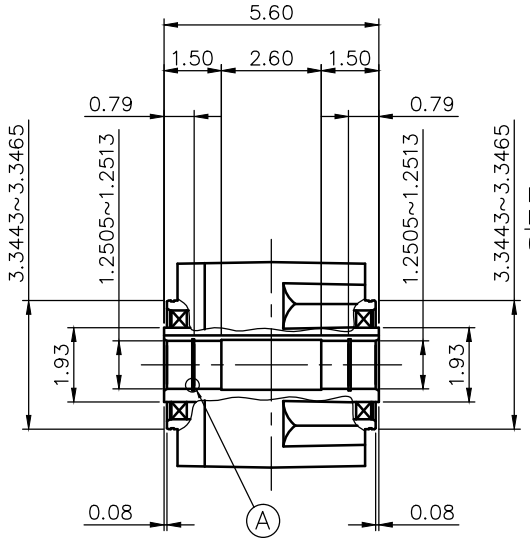

DETAIL OF OUTPUT SHAFT

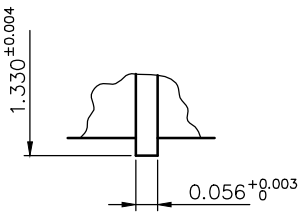

DETAIL OF : A

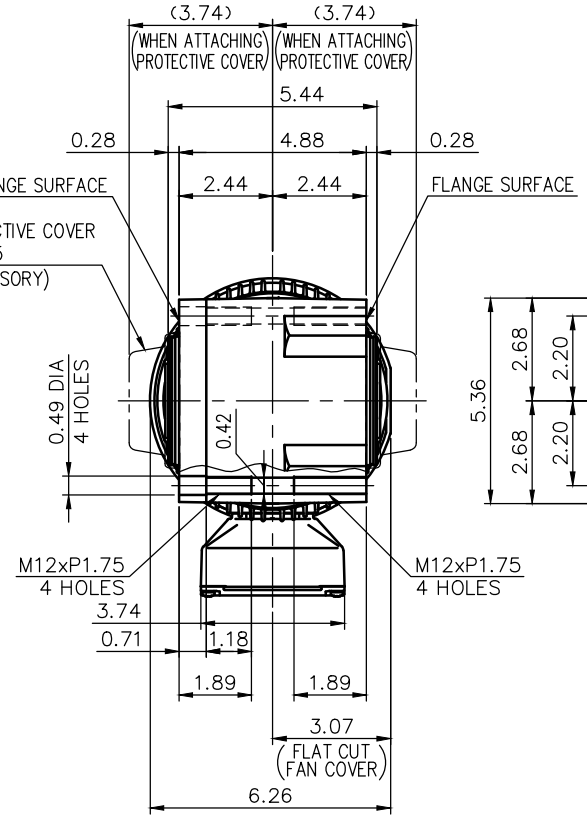

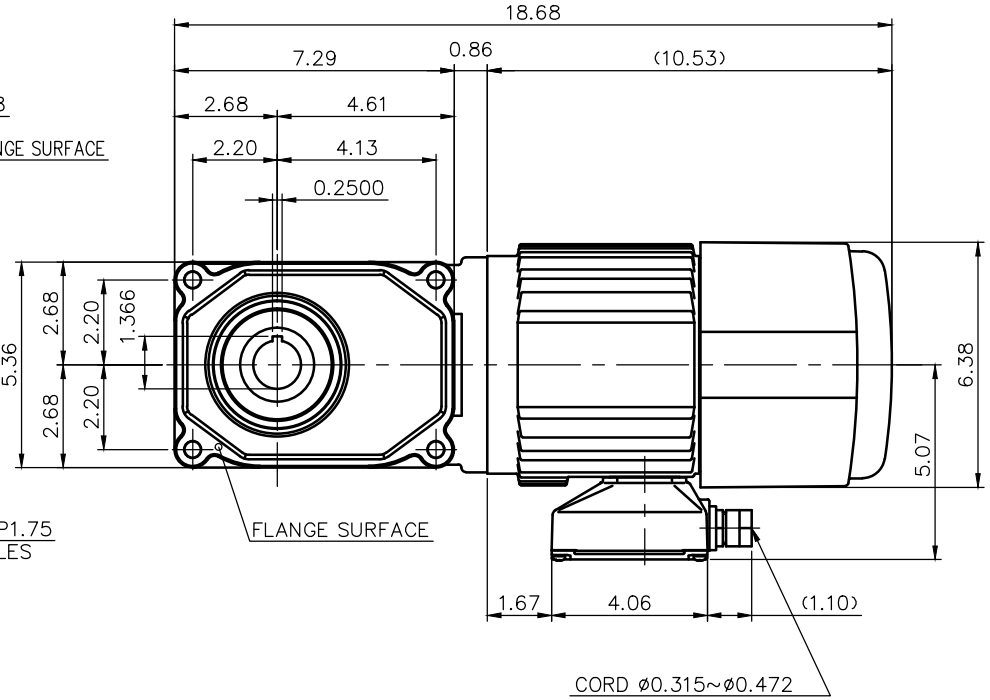

NOTE: THE RATING OF ENCLOSURE CLASS: IP65 (EN60034-5) EQUIVALENT.
NOTE: THE ATTACHED RECTIFIER IS USED FOR DC POWER SUPPLY TO THE BRAKE COIL.
NOTE: THE BRAKE LEADS ARE PULLED INTO THE TERMINAL BOX.

NOTE: OUTPUT SHAFT MATERIAL: SUS420J2
NOTE: THIS MOTOR IS AFFIXED WITH CE MARKING.
NOTE: THE GROUND LEAD SHOULD BE LONGER THAN THE SUPPLY LEAD FOR THE MOTOR.
NOTE: THIS MOTOR IS UL CERTIFIED MODEL.(UL1004-1)
NOTE: UL-LISTED MODEL NAME: WF5AWV2

BRAKE SPECIFICATION

TYPE	BSV-08U
BRAKE TYPE	SPRING CLOSE
INPUT VOLTAGE	DC 104V
POWER CONSUMPTION	30 W (at 75°C)
BRAKE TORQUE	52.0 in-lbs

MOTOR SPECIFICATION

TYPE	3-PHASE INDUCTION MOTOR
FORM	TOTALLY ENCLOSED FAN COOLED
OUT PUT	3/4 HP
VOLTAGE	208/230/460/400 V
FREQ.	60/60/60/50 Hz
POLES	4
ROTATIONAL FREQUENCY	1800/1800/1800/1500 rpm
RATING	S1 CONT.
INS.CLASS	F

REDUCER SPECIFICATION

TYPE	GTR
FORM	35
RATIO	1/5 1/7.5 1/10 1/12.5
	1/15 1/20 1/25 1/30
	1/40 1/50 1/60
LUBRICATION	GREASE

TITLE	F3S35S5~60-WF5AWV2 DIMENSION OF MODEL				
DRAWING NO.	F3S35S-WF5AWV2				
USER					
NOTICE					
APPROVE	Y.Ikeda	SCALE		UNIT	DATE
CHECK	Y.Sanji	1/5		in	2016.10.16
DESIGN	A.Kubota		NISSEI CORPORATION		