REVISIONS

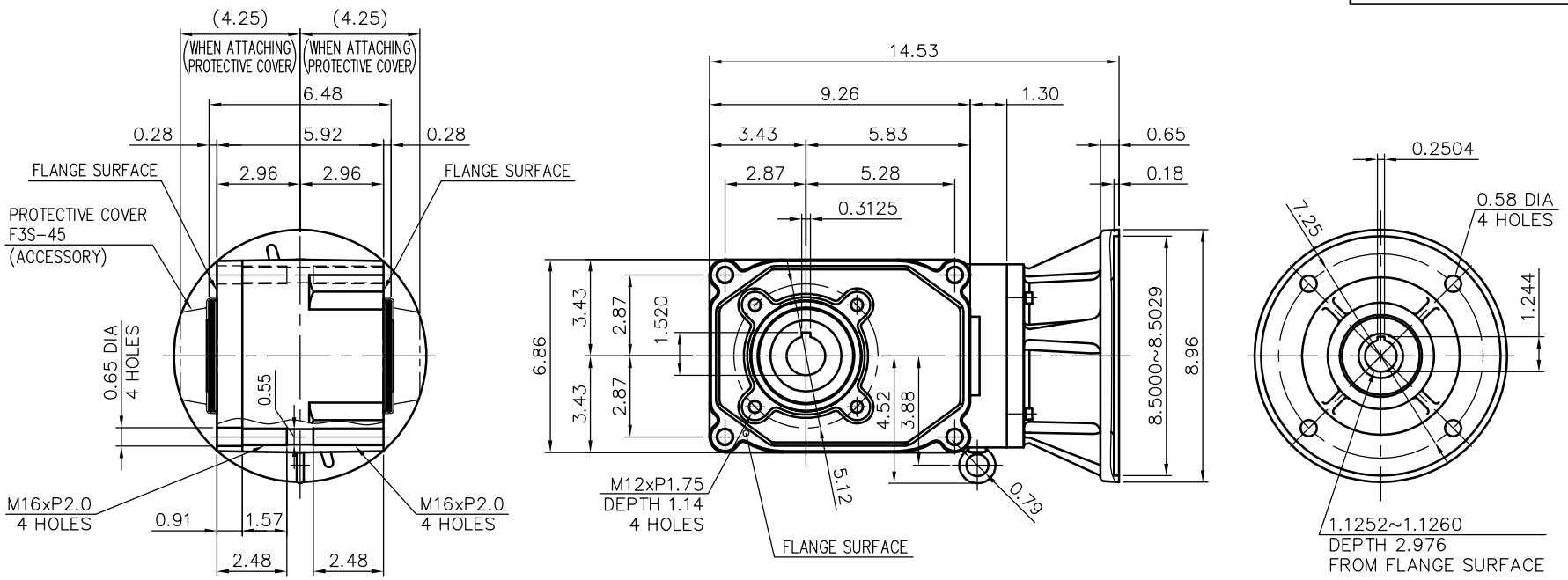

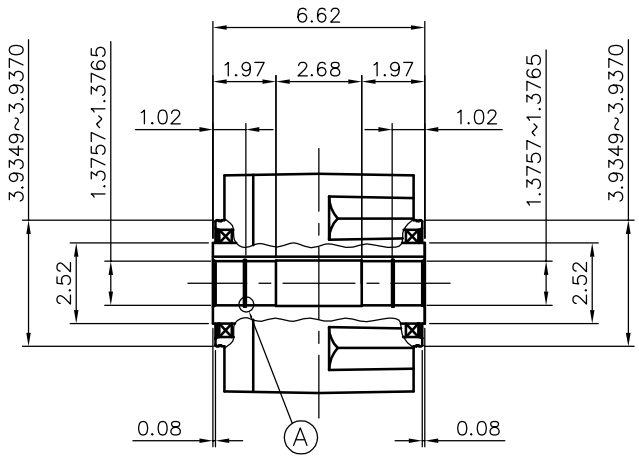

DETAIL OF OUTPUT SHAFT

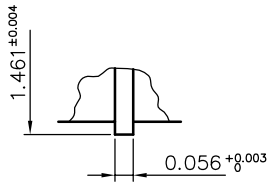

DETAIL OF : A

REDUCER SPECIFICATION

TYPE	GTR	
FORM	45	
RATIO	1/5 1/7.5 1/10 1/12.5	
	1/15 1/20 1/25 1/30	
LUBRICATION	GREASE	
CORRESPONDING MOTOR CAPACITY AT 4POLES		3 HP

TITLE	F3S45N005~030-NER DIMENSION OF MODEL				
DRAWING NO.	F3S45N-NER				
USER					
NOTICE					
APPROVE	H.Hayashi	SCALE		UNIT	DATE
CHECK	A.Hayakawa	1/6		in	2017.08.28
DESIGN	M.Suzuki		NISSEI CORPORATION		