REVISIONS

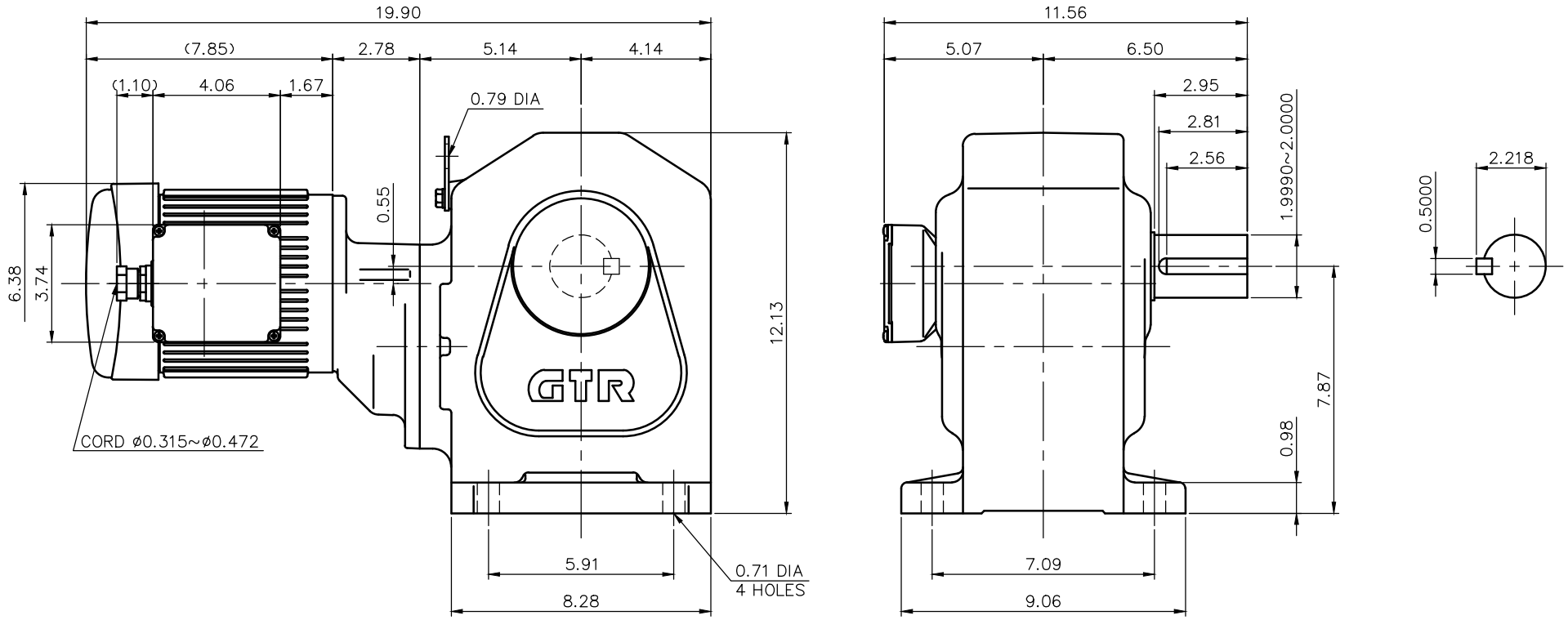

NOTE: THIS MOTOR IS AFFIXED WITH CE MARKING.
NOTE: THE GROUND LEAD SHOULD BE LONGER THAN THE SUPPLY LEAD FOR THE MOTOR.
NOTE: THIS MOTOR IS UL CERTIFIED MODEL.(UL1004-1)
NOTE: UL-LISTED MODEL NAME: MF5AWN

MOTOR SPECIFICATION

TYPE	3-PHASE INDUCTION MOTOR
FORM	TOTALLY ENCLOSED FAN COOLED
OUT PUT	3/4 HP
VOLTAGE	208/230/460/400 V
FREQ.	60/60/60/50 Hz
POLES	4
ROTATIONAL FREQUENCY	1800/1800/1800/1500 rpm
RATING	S1 CONT.
INS.CLASS	F

REDUCER SPECIFICATION

TYPE	GTR
FORM	50L
RATIO	1/300 1/375 1/450
LUBRICATION	GREASE

TITLE	H2L50L300~450-MF5AWN DIMENSION OF MODEL				
DRAWING NO.	H2L50L-MF5AWN				
USER					
NOTICE					
APPROVE	Y.Ikeda	SCALE		UNIT	DATE
CHECK	Y.Sanji	1/5		in	2016.10.16
DESIGN	A.Kubota		NISSEI CORPORATION		