REVISIONS

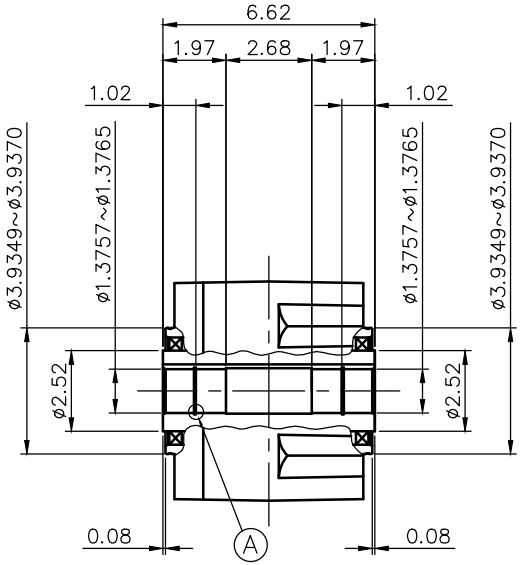

DETAIL OF OUTPUT SHAFT

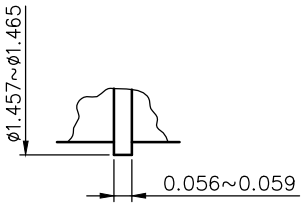

DETAIL OF : A

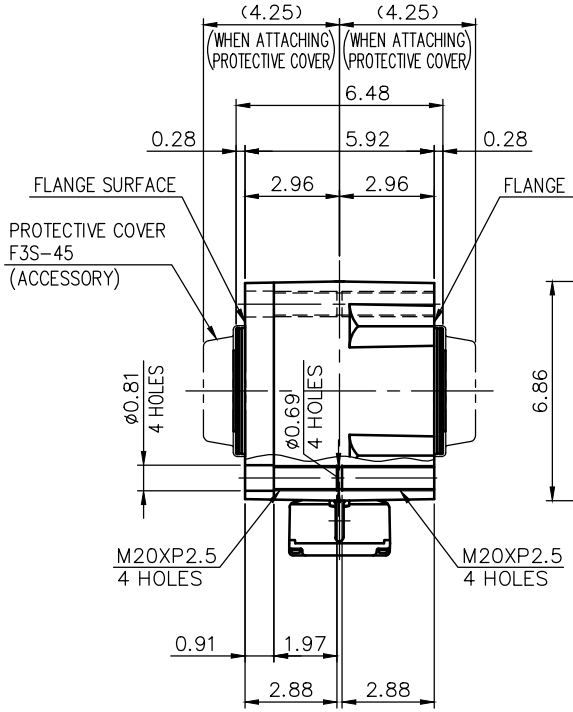

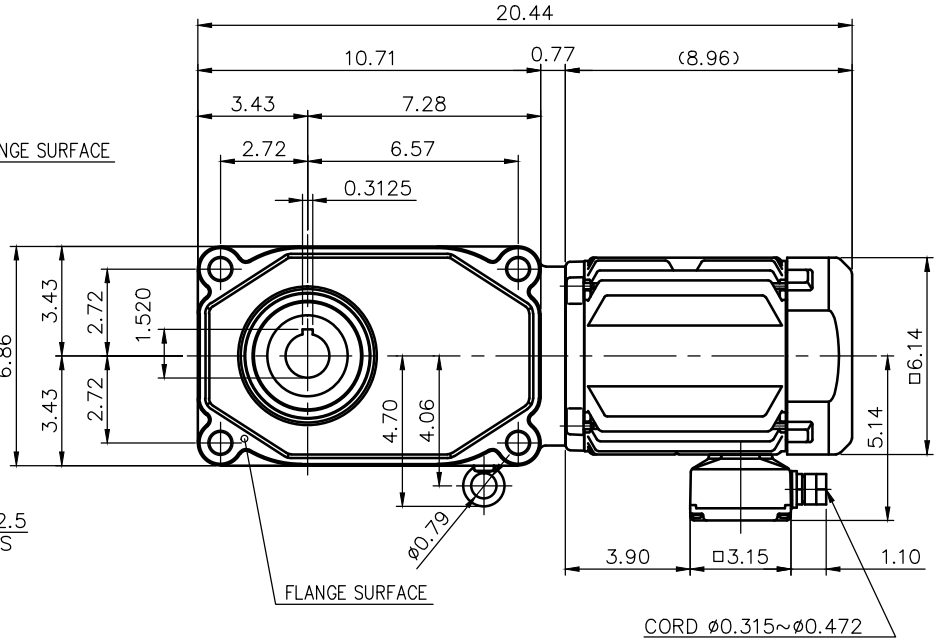

NOTE: THE RATING OF ENCLOSURE CLASS:
IP65 (EN60034-5) EQUIVALENT.
NOTE: OUTPUT SHAFT MATERIAL: SUS420J2

NOTE: THIS MOTOR IS AFFIXED WITH CE MARKING.
NOTE: THE GROUND LEAD SHOULD BE LONGER THAN THE SUPPLY LEAD FOR THE MOTOR.
NOTE: THIS MOTOR IS UL CERTIFIED MODEL. (UL1004-1)
NOTE: UL-LISTED MODEL NAME: WV6AEN

MOTOR SPECIFICATION

TYPE	3-PHASE INDUCTION MOTOR
FORM	TOTALLY ENCLOSED FAN COOLED P6
OUT PUT	1 HP
VOLTAGE	208/230/460/400 V
FREQ.	60/60/60/50 Hz
POLES	4
ROTATIONAL FREQUENCY	1800/1800/1800/1500 rpm
EFFICIENCY CLASS	IE3 EN60034-30 Standard
RATING	S1 CONT.
INS.CLASS	F

REDUCER SPECIFICATION

TYPE	GTR
FORM	45
RATIO	1/80 1/100 1/120
	1/160 1/200 1/240
LUBRICATION	GREASE

TITLE	F3S45S80~240-WV6AEN DIMENSION OF MODEL				
DRAWING NO.	F3S45S-WV6AEN				
USER					
NOTICE					
APPROVE	Y.Ikeda	SCALE		UNIT	DATE
CHECK	M.Iijima	1/6		in	2015.05.01
DESIGN	Y.Miura		NISSEI CORPORATION		