REVISIONS

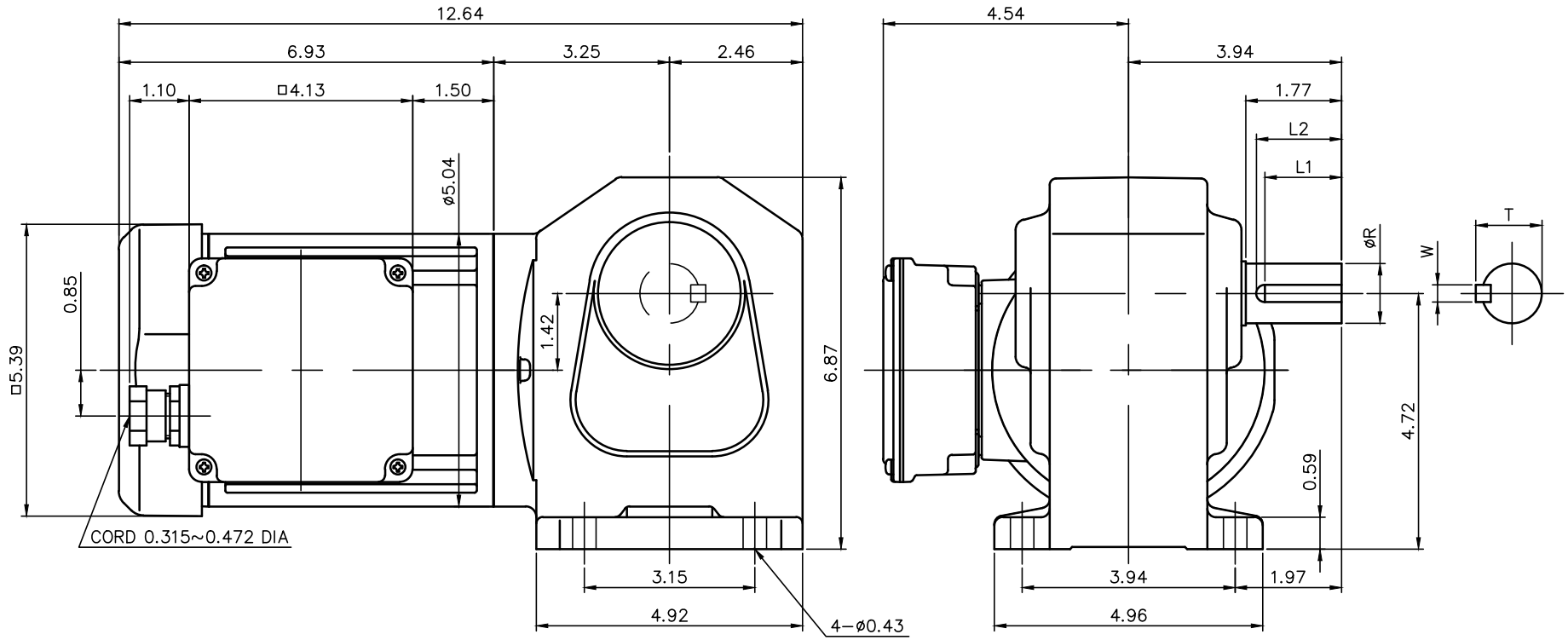


| モータ仕様 MOTOR SPECIFICATION | |
|---|---|
| 名称 TYPE | 三相誘導電動機 THREE PHASE INDUCTION MOTOR |
| 冷却方式 COOLING METHOD | 全閉外扇形 TOTALLY ENCLOSED FAN COOLED |
| 出力 MOTOR POWER | 1/2 HP (0.4 kW) |
| 定格 RATING | S1 CONT. |
| 耐熱クラス INS. CLASS | F |
| 保護構造 IP RATING | IP44 |

| モータ仕様 MOTOR SPECIFICATION | | | | | | |
|---|---|---|---|---|---|---|
| ** | 電圧 VOLTAGE | 周波数 FREQUENCY | 回転速度 ROTATION SPEED | 電流値 CURRENT VALUE | 対応規格 COMPLIANT STANDARDS | 高効率認証 EFFICIENCY STANDARDS |
| AV | 208 V | 60 Hz | 1680 r/min | 1.8 A | UL/cUL/CE | - |
| | 230 V | 60 Hz | 1720 r/min | 1.8 A | | |
| | 460 V | 60 Hz | 1720 r/min | 0.9 A | | |
| | 400 V | 50 Hz | 1400 r/min | 1.0 A | | |
| EV | 415 V | 50 Hz | 1390 r/min | 0.96 A | | |
| | 440 V | 50 Hz | 1410 r/min | 0.95 A | | |
| | 480 V | 60 Hz | 1680 r/min | 0.82 A | | |
| MA | 575 V | 60 Hz | 1700 r/min | 0.68 A | UL/cUL | |

| 減速機仕様 REDUCER SPECIFICATION | |
|---|---|
| 名称 TYPE | GTR |
| 枠番 FRAME NO. | 28 |
| 減速比 RATIO | 5 10 15 20 25 30 40 50 60 |
| 潤滑 LUBRICATION | グリース GREASE |
| 塗装 PAINT COLOR | グレー (マンセル値 9B6/0.5) GREY (MANSEL CODE: 9B6/0.5) |

● 製品型式「□□□」は減速比によって入る文字数が変わります。
Number of characters on product model「□□□」,varies depending on the reduction ratio.

● 製品型式「＊＊」には「AV」「EV」「MA」が入ります。
Replace product model「**」with「AV」「EV」「MA」.

| 出力軸仕様 OUTPUT SHAFT SPECIFICATION | | | | | | | |
|---|---|---|---|---|---|---|---|
| FRAME NO | R | STANDARD /OPTION | DIAMETER TOLERANCE | L1 | L2 | T | W |
| 28 | 1.1250 in | STANDARD | +0.0/−0.0005 | 1.50 in | 1.63 in | 1.236 in | 0.2500 in |
| | 28 mm | OPTION | +0.0/−0.013 | 40 mm | 40 mm | 31 mm | 8 mm |

| | | | | |
|---|---|---|---|---|
| TITLE | H2L28L□□□−MB04T＊＊EN 外形寸法図 DIMENSION OF MODEL | | | |
| DRAWING NO. | H2L28L−MB04TEN | | | |
| USER | | | | |
| NOTICE | | | | |
| APPROVE | H.Hayashi | SCALE 1:3 | UNIT in | DATE 2020.03.31 |
| CHECK | M.Iijima | | NISSEI CORPORATION | |
| DESIGN | A.Kobayashi | | | |