REVISIONS

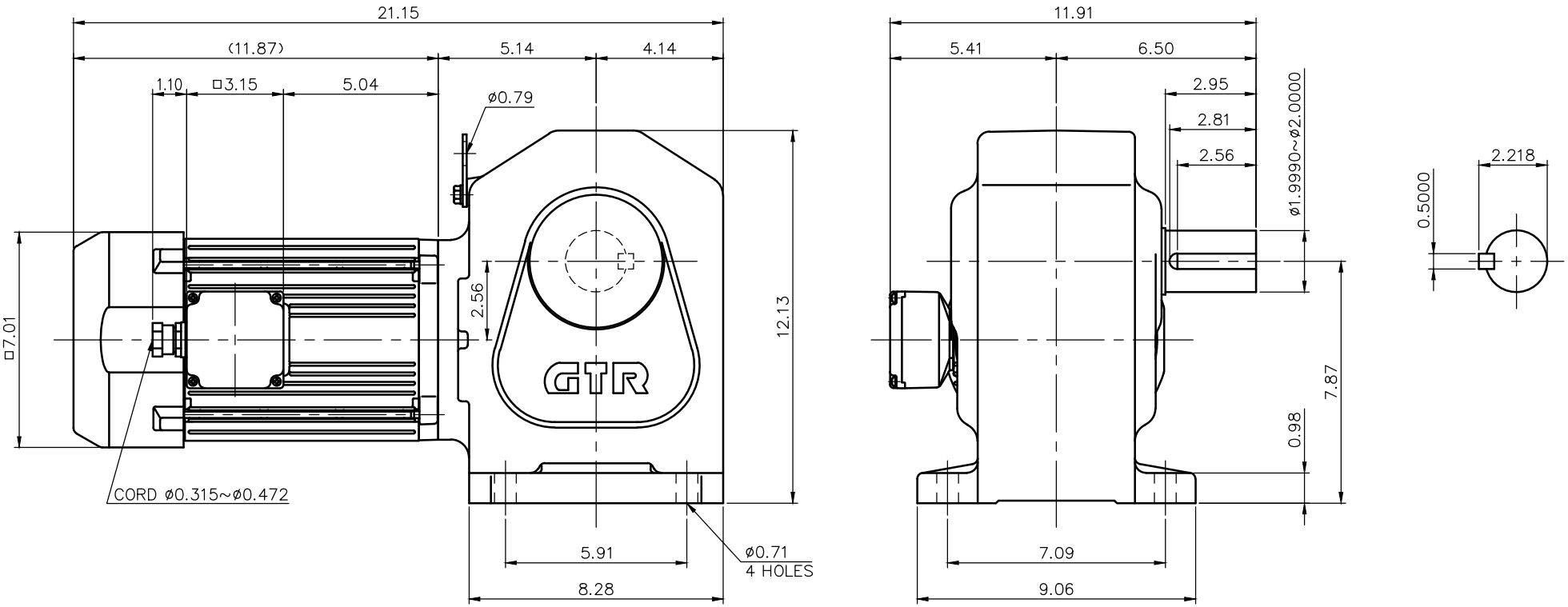

NOTE: THE BRAKE LEADS ARE PULLED INTO THE TERMINAL BOX.
NOTE: THE ATTACHED RECTIFIER IS USED FOR DC POWER SUPPLY TO THE BRAKE COIL.

NOTE: THIS MOTOR IS AFFIXED WITH CE MARKING.
NOTE: THE GROUND LEAD SHOULD BE LONGER THAN THE SUPPLY LEAD FOR THE MOTOR.
NOTE: THIS MOTOR IS UL CERTIFIED MODEL. (UL1004-1)
NOTE: UL-LISTED MODEL NAME: MV8AEB4

BRAKE SPECIFICATION

TYPE	BS3-15-180
BRAKE TYPE	SPRING CLOSE
INPUT VOLTAGE	DC 207V
POWER CONSUMPTION	49 W (at 75°C)
BRAKE TORQUE	104.1 in-lbs

MOTOR SPECIFICATION

TYPE	3-PHASE INDUCTION MOTOR
FORM	TOTALLY ENCLOSED FAN COOLED P8
OUT PUT	2 HP
VOLTAGE	208/230/460/400 V
FREQ.	60/60/60/50 Hz
POLES	4
ROTATIONAL FREQUENCY	1800/1800/1800/1500 rpm
EFFICIENCY CLASS	IE3 EN60034-30 Standard
RATING	S1 CONT.
INS.CLASS	F

REDUCER SPECIFICATION

TYPE	GTR
FORM	50L
RATIO	1/80 1/100 1/120 1/160 1/200 1/240
LUBRICATION	GREASE

TITLE	H2L50L80~240-MV8AEB4 DIMENSION OF MODEL				
DRAWING NO.	H2L50L-MV8AEB4				
USER					
NOTICE					
APPROVE	Y.Ikeda	SCALE		UNIT	DATE
CHECK	M.Iijima	1/5		in	2015.05.01
DESIGN	Y.Miura		NISSEI CORPORATION		