REVISIONS

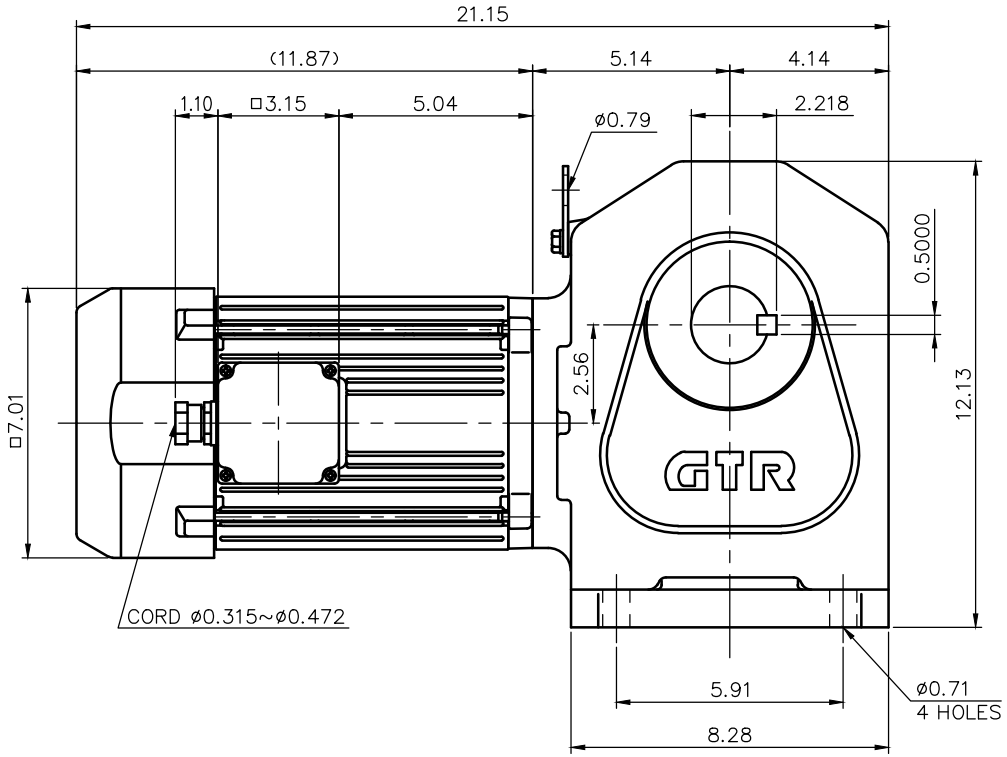


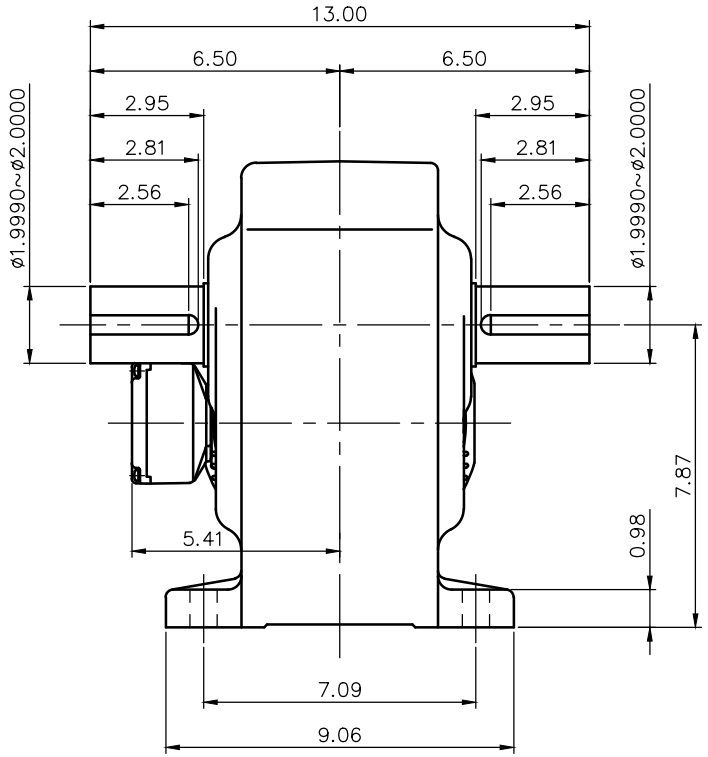


NOTE: THE BRAKE LEADS ARE PULLED INTO THE TERMINAL BOX.
NOTE: THE ATTACHED RECTIFIER IS USED FOR DC POWER SUPPLY TO THE BRAKE COIL.

NOTE: THIS MOTOR IS AFFIXED WITH CE MARKING.
NOTE: THE GROUND LEAD SHOULD BE LONGER THAN THE SUPPLY LEAD FOR THE MOTOR.
NOTE: THIS MOTOR IS UL CERTIFIED MODEL. (UL1004-1)
NOTE: UL-LISTED MODEL NAME: MV8AEB4

BRAKE SPECIFICATION

| | |
|---|---|
| TYPE | BS3-15-180 |
| BRAKE TYPE | SPRING CLOSE |
| INPUT VOLTAGE | DC 207V |
| POWER CONSUMPTION | 49 W (at 75°C) |
| BRAKE TORQUE | 104.1 in-lbs |

MOTOR SPECIFICATION

| | |
|---|---|
| TYPE | 3-PHASE INDUCTION MOTOR |
| FORM | TOTALLY ENCLOSED FAN COOLED P8 |
| OUT PUT | 2 HP |
| VOLTAGE | 208/230/460/400 V |
| FREQ. | 60/60/60/50 Hz |
| POLES | 4 |
| ROTATIONAL FREQUENCY | 1800/1800/1800/1500 rpm |
| EFFICIENCY CLASS | IE3 EN60034-30 Standard |
| RATING | S1 CONT. |
| INS.CLASS | F |

REDUCER SPECIFICATION

| | |
|---|---|
| TYPE | GTR |
| FORM | 50T |
| RATIO | 1/80 1/100 1/120 1/160 1/200 1/240 |
| LUBRICATION | GREASE |

| | | | | | |
|---|---|---|---|---|---|
| TITLE | H2L50T80~240-MV8AEB4 DIMENSION OF MODEL | | | | |
| DRAWING NO. | H2L50T-MV8AEB4 | | | | |
| USER | | | | | |
| NOTICE | | | | | |
| APPROVE | Y.Ikeda | SCALE | | UNIT | DATE |
| CHECK | M.Iijima | 1/5 | | in | 2015.05.01 |
| DESIGN | Y.Miura | | NISSEI CORPORATION | | |