REVISIONS

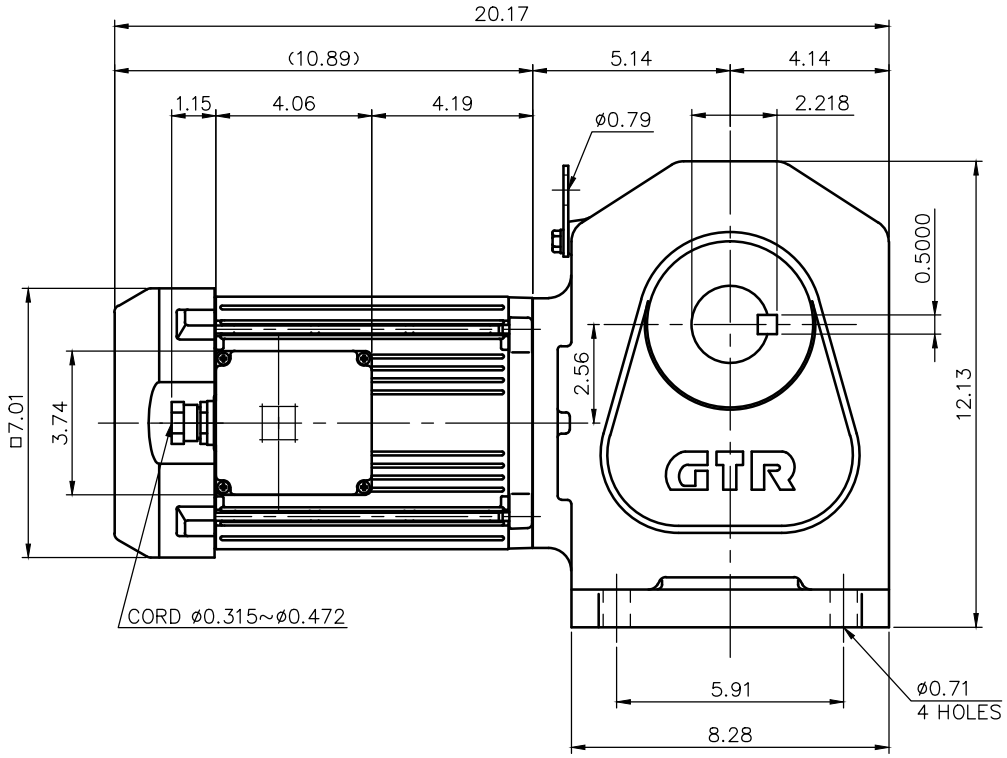

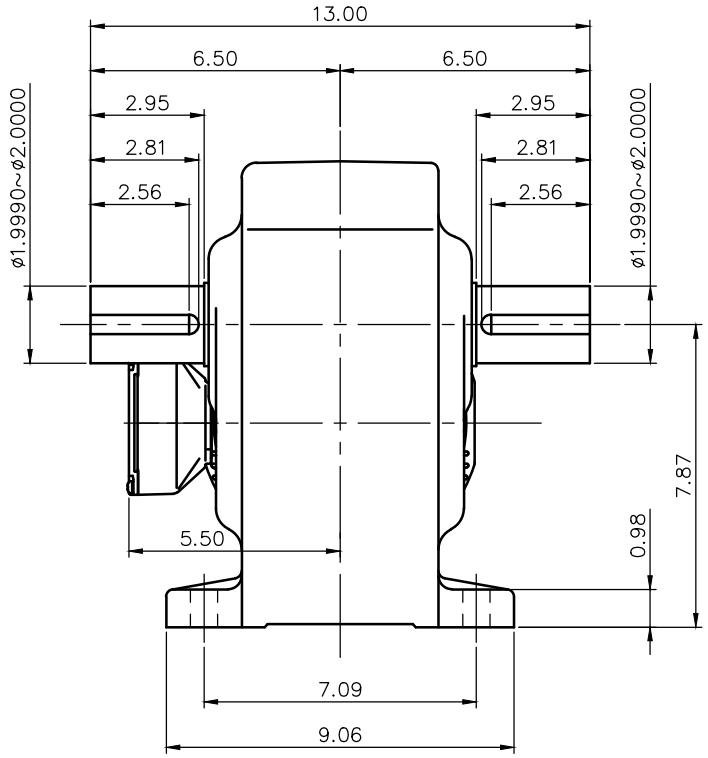

NOTE: COMPLIANCE CERTIFICATION NUMBER: CC303B
NOTE: THIS MOTOR IS AFFIXED WITH CE MARKING.
NOTE: THE GROUND LEAD SHOULD BE LONGER THAN THE SUPPLY LEAD FOR THE MOTOR.
NOTE: THIS MOTOR IS UL CERTIFIED MODEL. (UL1004-1)
NOTE: UL-LISTED MODEL NAME: MV8AWN

MOTOR SPECIFICATION

TYPE	3-PHASE INDUCTION MOTOR
FORM	TOTALLY ENCLOSED FAN COOLED P8
OUT PUT	2 HP
VOLTAGE	208/230/460/400 V
FREQ.	60/60/60/50 Hz
POLES	4
ROTATIONAL FREQUENCY	1800/1800/1800/1500 rpm
EFFICIENCY CLASS	IE3 EN60034-30 Standard
RATING	S1 CONT.
INS.CLASS	F

REDUCER SPECIFICATION

TYPE	GTR
FORM	50T
RATIO	1/80 1/100 1/120 1/160 1/200 1/240
LUBRICATION	GREASE

TITLE	H2L50T80~240-MV8AWN DIMENSION OF MODEL				
DRAWING NO.	H2L50T-MV8AWN				
USER					
NOTICE					
APPROVE	Y.Ikeda	SCALE		UNIT	DATE
CHECK	M.Iijima	1/5		in	2016.04.01
DESIGN	Y.Miura		NISSEI CORPORATION		