Orientalmotor

HM-40112-12

5-phase stepping motor

CRK Series CFLEX

Built-in Controller Type

OPERATING MANUAL

Introduction

Installation and connection

Operation type and setting

Method of control via I/O

Method of control via Modbus RTU (RS-485 communication)

Method of control via industrial network

Inspection, troubleshooting and remedial actions

Appendix

Thank you for purchasing an Oriental Motor product.
This Manual describes product handling procedures and safety precautions.

- Please read it thoroughly to ensure safe operation.
- Always keep the manual where it is readily available.

1 Introduction

1 **Introduction** 8

2 **Operating Manuals for the product** 9

3 **Overview of the product** 10

4 **System configuration** 12

5 **Safety precautions** 13

6 **Precautions for use** 15

7 **General specifications** 17

8 **Regulations and standards** 18

8-1 EU Directive 18

9 **Preparation** 19

9-1 Checking the product 19

9-2 Combinations of motors and drivers 19

9-3 Names and functions of parts 22

2 Installation and connection

1 **Installation** 26

1-1 Location for installation 26

1-2 Installing the motor 26

1-3 Installing a load 28

1-4 Permissible radial load and permissible axial load 29

1-5 Installing the driver 32

1-6 Installing and wiring in compliance with EMC Directive 33

2 **Connection** 35

2-1 Connecting the motor 35

2-2 Connecting the connector-type motor 36

2-3 Connecting the electromagnetic brake 38

2-4 Connecting the power supply and grounding the driver 39

2-5 Connecting the I/O signals 40

2-6 Connecting the data setter 43

2-7 Connecting the encoder 43

2-8 Connecting the RS-485 communication cable 46

3 **Explanation of I/O signals** 47

3-1 Input signals 47

3-2 Output signals 53

3 Operation type and setting

1 Adjustment and setting 60

1-1 Step angle 60
1-2 Operating current 60
1-3 Standstill current 61
1-4 Acceleration/deceleration rate 61

2 Operation 62

2-1 Positioning operation 63
2-2 Return-to-home operation 72
2-3 Continuous operation 77
2-4 Other operation 80

3 Operation data 82

4 Parameter 83

4-1 Parameter list 83
4-2 I/O parameter 84
4-3 Motor parameter 85
4-4 Speed parameter 85
4-5 Return-to-home parameter 86
4-6 Alarm/warning parameter 86
4-7 Common parameter 87
4-8 Operation setting parameter 87
4-9 Communication parameter 88

5 Related functions 89

5-1 Position control 89
5-2 Encoder input 89
5-3 Misstep detection function 90

4 Method of control via I/O

1 Guidance 94

2 Operation data 97

3 Parameter 98

3-1 Parameter list 98
3-2 I/O parameter 99
3-3 Motor parameter 100
3-4 Speed parameter 100
3-5 Return-to-home parameter 100
3-6 Alarm/warning parameter 101
3-7 Common parameter 101
3-8 Communication parameter 101
3-9 Operation setting parameter 102

4 Timing charts 103

5 Method of control via Modbus RTU (RS-485 communication)

1 Guidance 106

2 Communication specifications 108

3 Setting the switches 109

4 Setting the RS-485 communication 111

5 Communication mode and communication timing 112

5-1 Communication mode 112

5-2 Communication timing 112

6 Message 113

6-1 Query 113

6-2 Response 115

7 Function code 117

7-1 Reading from a holding register(s) 117

7-2 Writing to a holding register 118

7-3 Diagnosis 118

7-4 Writing to multiple holding registers 119

7-5 Control method selection 120

8 Register address list 121

8-1 Register address types 121

8-2 Operation area 122

8-3 Maintenance area 125

8-4 Monitor area 126

8-5 Parameter area 128

8-6 Operation data area 131

9 Group send 133

10 Detection of communication errors 135

10-1 Communication errors 135

10-2 Alarms and warnings 135

11 Timing charts 136

12 Example of communication setting 138

12-1 Positioning operation 138

12-2 Continuous operation 140

12-3 Return-to-home operation 141

6 Method of control via industrial network

1 Method of control via CC-Link communication 144

1-1 Guidance 144
1-2 Setting the switches 147
1-3 Remote register list 148
1-4 Assignment for remote I/O of 6 axes connection mode 148
1-5 Assignment for remote I/O of 12 axes connection mode 151

2 Method of control via MECHATROLINK communication 156

2-1 Guidance 156
2-2 Setting the switches 159
2-3 I/O field map for the **NETC01-M2** 160
2-4 I/O field map for the **NETC01-M3** 161
2-5 Communication format 162

3 Details of remote I/O 164

3-1 Input signals to the driver 164
3-2 Output signals from the driver 164

4 Command code list 166

4-1 Group function 166
4-2 Maintenance command 167
4-3 Monitor command 168
4-4 Operation data 170
4-5 Application parameter 170
4-6 System parameter 172
4-7 Operation command 173

7 Inspection, troubleshooting and remedial actions

1 Inspection and maintenance 176

1-1 Inspection 176
1-2 Warranty 176
1-3 Disposal 176

2 Alarms and warnings 177

2-1 Alarms 177
2-2 Warnings 180

3 Troubleshooting and remedial actions 181

8 Appendix

1 Cables 184

2 Accessory 185

3 Method of control via GW protocol Version 1 186

3-1 Guidance 186
3-2 Communication specifications 189
3-3 Setting the switches 190
3-4 Communication mode 191
3-5 Communication timing 192
3-6 Frame structures 192
3-7 Control method selection 195
3-8 Example of communication setting 196
3-9 Command list 199
3-10 Command types 202
3-11 Command details 203
3-12 Simultaneous send 223
3-13 Group send 223
3-14 Detection of communication errors 225
3-15 Timing charts 226

1 Introduction

This part explains the composition of the operating manuals, the product overview, specifications and safety standards as well as the name and function of each part and others.

◆Table of contents

1 Introduction 8

2 Operating Manuals for the product..... 9

3 Overview of the product..... 10

4 System configuration..... 12

5 Safety precautions 13

6 Precautions for use..... 15

7 General specifications 17

8 Regulations and standards..... 18

8-1 EU Directive 18

9 Preparation 19

9-1 Checking the product..... 19

9-2 Combinations of motors and drivers..... 19

9-3 Names and functions of parts..... 22

1 Introduction

■ Before use

Only qualified personnel of electrical and mechanical engineering should work with the product.
Use the product correctly after thoroughly reading the section "4 Safety precautions" on p.13. In addition, be sure to observe the contents described in warning, caution, and note in this manual.
The product described in this manual has been designed and manufactured to be incorporated in general industrial equipment. Do not use for any other purpose. For the driver's power supply, use a DC power supply with reinforced insulation on its primary and secondary sides. Oriental Motor Co., Ltd. is not responsible for any damage caused through failure to observe this warning.

2 Operating Manuals for the product

■ Related operating manuals

For operating manuals, download from Oriental Motor Website Download Page or contact your nearest Oriental Motor sales office.

- **CRK** Series FLEX Built-in Controller Type OPERATING MANUAL (this document)
- Data setter **OPX-2A** OPERATING MANUAL

3 Overview of the product

The product described in this manual is a product that combines a driver with a built-in positioning function and a high-torque, low-vibration 5-phase stepping motor. The driver is compatible with I/O control, Modbus RTU control (RS-485 communication), and FA network control via the network converter.
Operation data and parameters are set using any of the **MEXE02** support software, the **OPX-2A** data setter, or RS-485 communication.

■ Main features

● Three operating patterns

You can perform positioning operation, return-to-home operation and continuous operation.
Up to 63 operation data points can be set, and multi-point positioning is also possible.

● Low vibration, low noise

The micro-step driver with smooth drive function achieves low vibration and low noise.

● Supporting Modbus RTU (RS-485 communication)

You can set operation data and parameters or issue operation start/stop commands from the host controller.
Up to 31 drivers can be connected to one client.

● Detection of misstep

If the deviation between the encoder counter value and driver command position reaches or exceeds the set value, a STEPOUT output signal will be output.

● Alarm and warning functions

The driver provides alarms that are designed to protect the driver from overheating, poor connection, misoperation, etc. (protective functions), as well as warnings that are output before the corresponding alarms generate (warning functions).

■ Accessories

The operation data and parameters can be set using a **MEXE02**, **OPX-2A** or via RS-485 communication. Provide the following accessories as needed.

- **MEXE02**.....The **MEXE02** can be downloaded from Oriental Motor Website Download Page.
  When the **MEXE02** is used, a communication cable for support software **CC05IF-USB** is needed to connect a PC and driver. Be sure to purchase it.
- **OPX-2A**.....This product can be purchased separately.

■ Related products

You can connect the **CRK** Series FLEX built-in controller via the network converter so as to use in various network.

Network converter	Supported network
NETC01-CC	CC-Link Ver.1.1
NETC02-CC	CC-Link Ver.2
NETC01-M2	MECHATROLINK-II
NETC01-M3	MECHATROLINK-III
NETC01-ECT	EtherCAT

■ Function list

Main functions

Return-to-home operation [Setting by parameters]	• **2-sensor mode** • **3-sensor mode** • **Data setting mode (Position preset)**
Motor operation [Setting by operation data and parameters]	• **Positioning operation** **Operation function**: Single-motion operation, Linked-motion operation, Linked-motion operation 2 + **Starting method**: Data number selecting operation, Sequential positioning operation • **Continuous operation**
Other operations [Setting by parameters]	• **JOG operation**

Support functions

[Setting by parameters]	• **Protective function** Alarm detection Warning detection • **I/O function** Output function selection Input logic level setting • **Coordination setting** Motor resolution Motor rotation direction Encoder setting (Electronic gear) • **Return-to-home function** Home position offset External sensor signal detection • **Stop operation** STOP input action Hardware overtravel Software overtravel • **Motor function setting** Operating current Standstill current

External interface

Data setter	• **Monitor function** • **Operation data setting** • **Parameter setting** • **Data storing** • **Download/Upload** • **Data initialization** • **Test function** Test operation Teaching I/O test
RS-485 communication	• **Operation start** • **Operation data setting** • **Parameter setting** • **Monitor function** • **Maintenance function**

4 System configuration

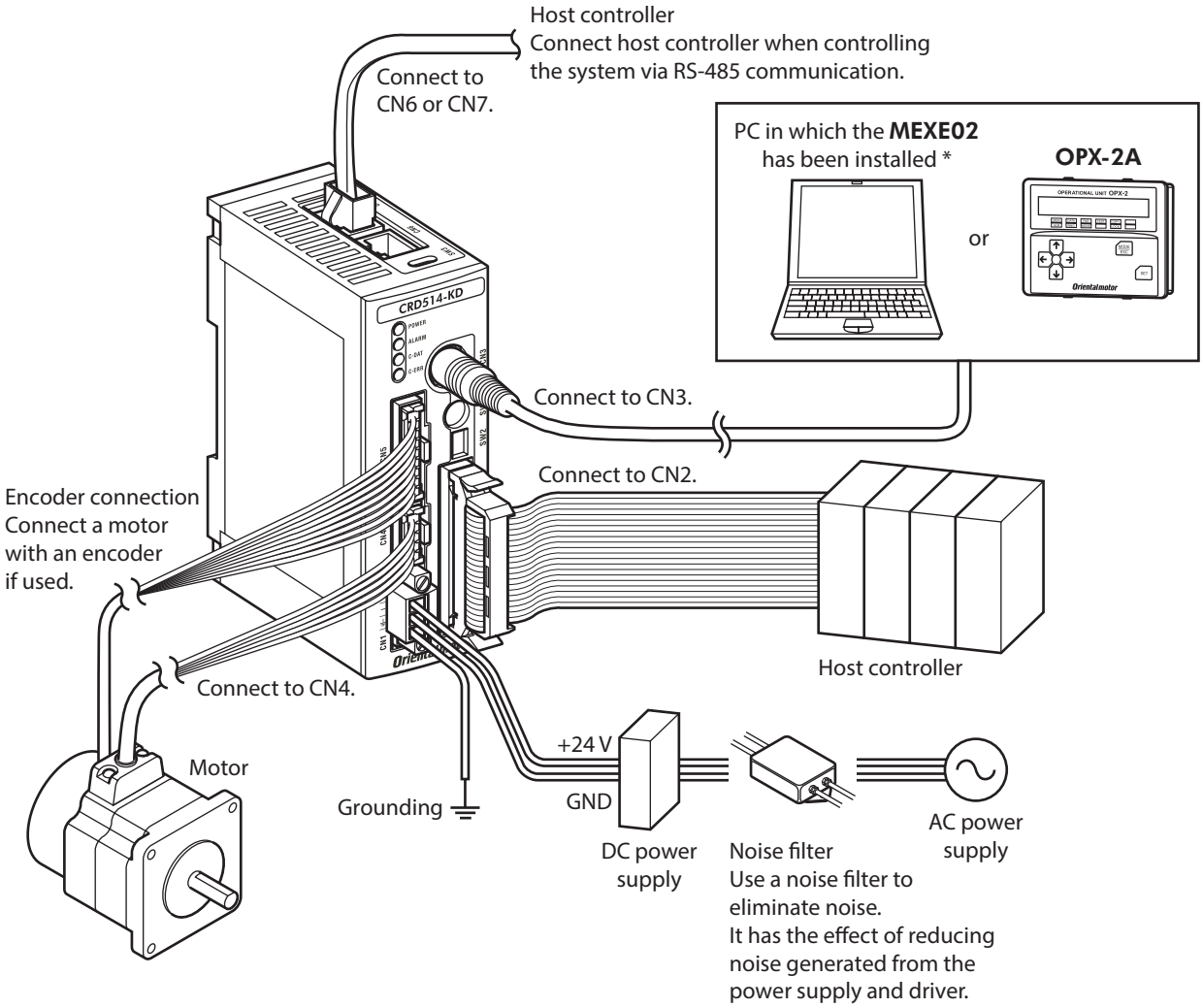

* The PC must be supplied by the user. Use the Oriental Motor communication cable for the support software when connecting the PC and driver.

5 Safety precautions

The precautions described below are intended to prevent danger or injury to the user and other personnel through safe, correct use of the product. Use the product only after carefully reading and fully understanding these instructions.

⚠WARNING	Handling the product without observing the instructions that accompany a "WARNING" symbol may result in serious injury or death.
⚠CAUTION	Handling the product without observing the instructions that accompany a "CAUTION" symbol may result in injury or property damage.
Note	The items under this heading contain important handling instructions that the user should observe to ensure safe use of the product.

⚠WARNING

General

- Do not use the product in explosive or corrosive environments, in the presence of flammable gases, locations subjected to splashing water, or near combustibles. Doing so may result in fire, electric shock or injury.
- Assign qualified personnel the task of installing, wiring, operating/controlling, inspecting and troubleshooting the product. Failure to do so may result in fire, electric shock or injury.
- When using the product in a vertical drive application such as elevating equipment, be sure to take a measure to hold the moving part in position. Failure to do so may result in injury or damage to equipment.
- Do not use the brake mechanism of the electromagnetic brake motor for braking or as a safety brake. Doing so may result in injury or damage to equipment.
- With certain types of alarms (protective functions), the motor may stop when the alarm generates and the holding torque will be lost as a result. This will result in injury or damage to equipment.
- When an alarm is generated, first remove the cause and then clear the alarm. Continuing the operation without removing the cause of the problem may cause malfunction of the motor and driver, leading to injury or damage to equipment.

Connection

- Always keep the power supply voltage of the driver within the specified range. Failure to do so may result in fire.
- For the driver's power supply, use a DC power supply with reinforced insulation on its primary and secondary sides. Failure to do so may result in electric shock.
- Connect the cables securely according to the wiring diagram in order to prevent fire.
- Do not forcibly bend, pull or pinch the cable or lead wire. Doing so may result in fire.
- Turn off the power to both the PC and driver before connecting your PC to the driver. Failure to do so may cause electric shock.

Operation

- Turn off the driver power in the event of a power failure. Otherwise, the motor may suddenly start when the power is restored, causing injury or damage to equipment.
- Do not remove the motor excitation during operation. Doing so may cause the motor to stop and lose the holding force, resulting in injury or damage to equipment.
- Configure an interlock circuit using a sequence program so that the entire system including the driver will operate on the safe side if a RS-485 communication error occurs.

Repair, disassembly and modification

- Do not disassemble or modify the motor and driver. Doing so may result in injury.

⚠CAUTION

General

- Do not use the motor and driver beyond its specifications. Doing so may result in injury or damage to equipment.
- Keep your fingers and objects out of the openings in the motor and driver. Failure to do so may result in fire or injury.
- Do not touch the motor and driver during operation or immediately after stopping. Doing so may result in skin burn(s).

Transportation

- Do not hold the motor output shaft, motor cable or lead wires. This may cause damage or injury.

Installation

- Install the motor and driver in an enclosure in order to prevent injury.
- Keep the area around the motor and driver free of combustible materials in order to prevent fire or a skin burn(s).
- Do not leave anything around the motor and driver that would obstruct ventilation. Doing so may result in damage to equipment.
- Provide a cover over the rotating parts (output shaft) of the motor to prevent injury.

Connection

- The driver's power supply connector (CN1), I/O connector (CN2), data edit connector (CN3) and RS-485 communication connectors (CN6/CN7) are not electrically insulated. When grounding the positive terminal of the power supply, do not connect any equipment (PC, etc.) whose negative terminal is grounded. Doing so may cause the driver and PC to short, damaging both.
- When connecting, check the silk screen of the driver and pay attention to the polarity of the power supply. Reverse-polarity connection may cause damage to the driver. The power-supply circuit and the RS-485 communication circuit are not insulated. Therefore, when controlling multiple drivers via RS-485 communication, the reverse polarity of the power supply will cause a short circuit and may result in damage to the drivers.

Operation

- Use a motor and driver only in the specified combination. An incorrect combination may cause a fire.
- Provide an emergency stop device or emergency stop circuit external to the equipment so that the entire equipment will operate safely in the event of a system failure or malfunction. Failure to do so may result in injury.
- Before supplying power to the driver, turn all control inputs to the driver to OFF. Failure to do so may result in injury or damage to equipment.
- Set the speed and acceleration/deceleration rate at reasonable levels. Otherwise, the motor will misstep and the moving part may move in an unexpected direction, resulting in injury or damage to equipment.
- Do not touch the rotating part (output shaft) during operation. This may cause injury.
- When moving the moving part manually, put the motor into a non-excitation state. Continuing the work while the motor is in an excitation state may result in injury.
- The motor surface temperature may exceed 70 °C (158 °F) even under normal operating conditions. If the operator is allowed to approach the running motor, attach a warning label as shown below in a conspicuous position. Failure to do so may result in skin burn(s).

Warning label

- Immediately when trouble has occurred, stop running and turn off the driver power. Failure to do so may result in fire or injury.
- Static electricity may cause the driver to malfunction or suffer damage. While the driver is receiving power, do not touch the driver. Use only an insulated slotted screwdriver to adjust the driver's switches.

6 Precautions for use

This section covers limitations and requirements the user should consider when using the product.

- **When conducting the insulation resistance measurement and the dielectric strength test, be sure to separate the connection between the motor and the driver.**

  Conducting the insulation resistance measurement or dielectric strength test with the motor and driver connected may result in damage to the product.

- **Do not apply strong impact on the motor output shaft.**

  If you are using a motor with encoder, an optical encoder is housed in the motor. To prevent damage to the encoder, handle the motor with care and avoid strong impact to the motor output shaft when transporting the motor or installing the load.

- **Do not apply a radial load and axial load in excess of the specified permissible limit**

  Operating it under an excessive radial load and axial load may damage the motor bearings (ball bearings). Be sure to operate the motor within the specified permissible limit of radial load and axial load. See p.29 for details.

- **Motor case temperature**
  - The motor case surface temperature may exceed 100 °C (212 °F) under certain conditions (ambient temperature, operating speed, duty cycle, etc.). Keeping the surface temperature of the motor case below 100 °C (212 °F) will also maximize the life of the motor bearings (ball bearings).
  - Use the geared motor in a condition where the gear case temperature does not exceed 70 °C (158 °F), in order to prevent deterioration of grease and parts in the gear case.
  - When the motor with encoder is used, make sure the temperature of the encoder case does not exceed 80 °C (176 °F).

- **Holding torque at standstill**

  The motor holding torque is reduced by the current cutback function of the driver at motor standstill. When selecting a motor, check the holding torque at motor standstill in the specifications on the catalog.

- **Do not use the electromagnetic brake to reduce speed or as a safety brake.**

  Do not use the electromagnetic brake as a means to decelerate and stop the motor. The brake hub of the electromagnetic brake will wear significantly and the braking force will drop if used to stop the motor.
  The electromagnetic brake is a power-off activated type. This means that although it helps maintain the position of the load in the event of power outage, etc., this brake cannot securely hold the load in place. Accordingly, do not use the electromagnetic brake as a safety brake. To use the electromagnetic brake to hold the load in place, do so after the motor has stopped.

- **Note on connecting a power supply whose positive terminal is grounded**

  The driver's power supply connector (CN1), I/O connector (CN2), data edit connector (CN3) and RS-485 communication connectors (CN6/CN7) are not electrically insulated. When grounding the positive terminal of the power supply, do not connect any equipment (PC, etc.) whose negative terminal is grounded. Doing so may cause the driver and PC to short, damaging both.

- **Preventing electrical noise**

  See "1-6 Installing and wiring in compliance with EMC Directive" on p.33 for measures with regard to noise.

- **Regeneration**

  The overvoltage alarm will generate depending on the operating condition. When an alarm is generated, review the operating conditions.

- **Saving data to the non-volatile memory**

  Do not turn off the main power supply while data is being written to the non-volatile memory and five seconds after the completion of a data write. Doing so may abort the data write and cause a EEPROM error alarm to generate.
  The non-volatile memory can be rewritten approximately 100,000 times.

- **Grease of geared motor**

  On rare occasions, a small amount of grease may ooze out from the geared motor. If there is concern over possible environmental damage resulting from the leakage of grease, check for grease stains during regular inspections. Alternatively, install an oil pan or other device to prevent leakage from causing further damage. Oil leakage may lead to problems in the customer's equipment or products.

- **Rotating direction of the gear output shaft**

The relationship between the rotating direction of the motor shaft and that of the gear output shaft changes as follows, depending on the gear type and gear ratio.

Type of gear	Gear ratio	Rotating direction (relative to the motor rotating direction)			
		Frame size [mm (in.)]			
		□20 (0.79) ø22 (0.87)	□28 (1.10) □30 (1.18)	□42 (1.65)	□60 (2.36)
TH geared	3.6, 7.2, 10	–	Opposite direction	Same direction	
	20, 30	–	Same direction	Opposite direction	
PS geared **PN** geared	All gear ratio	Same direction			
Harmonic geared	All gear ratio	Opposite direction			

7 General specifications

		Motor		Driver
Degree of protection		• High-resolution type • High-torque type • High-torque type with encoder • Geared type (**PK513**, **PK523**)	IP20	IP20
		• Standard type • Standard type with electromagnetic brake • Standard type with encoder • Geared type (**PK543**, **PK544**, **PK564**, **PK566**)	IP30	
Operation environment	Ambient temperature	• –10 to +50 °C (+14 to +122 °F) • **PS** geared type of ø22 mm (ø0.87 in.): 0 to +50 °C (+32 to +122 °F) (non-freezing) • Harmonic geared type: 0 to +40 °C (+32 to +104 °F) (non-freezing)		0 to +40 °C (+32 to +104 °F) (non-freezing)
	Humidity	85% or less (non-condensing)		
	Altitude	Up to 1,000 m (3,300 ft.) above sea level		
	Surrounding atmosphere	No corrosive gas, dust, water or oil		
Storage environment	Ambient temperature	–20 to +60 °C (–4 to +140 °F) (non-freezing)		–25 to +70 °C (–13 to +158 °F) (non-freezing)
	Humidity	85% or less (non-condensing)		
	Altitude	Up to 3,000 m (10,000 ft.) above sea level		
	Surrounding atmosphere	No corrosive gas, dust, water or oil		
Shipping environment	Ambient temperature	–20 to +60 °C (–4 to +140 °F) (non-freezing)		–25 to +70 °C (–13 to +158 °F) (non-freezing)
	Humidity	85% or less (non-condensing)		
	Altitude	Up to 3,000 m (10,000 ft.) above sea level		
	Surrounding atmosphere	No corrosive gas, dust, water or oil		
Insulation resistance		100 MΩ or more when 500 VDC megger is applied between the windings and case.		100 MΩ or more when 500 VDC megger is applied between the FG terminal and power supply terminal.
Dielectric strength		Sufficient to withstand the following between the windings and case for 1 minute. • **PK513P**, **PK52□PM**, **PK52□P**, **PK54□PM**, **PK54□P**: 0.5 kVAC 50/60 Hz • **PK54□**: 1.0 kVAC 50/60 Hz • **PK52□HPM**, **PK52□HP**, **PK56□PM**, **PK56□**: 1.5 kVAC 50/60 Hz		Sufficient to withstand 500 VAC at 50 Hz or 60 Hz applied between the FG terminal and power supply terminal for one minute.

8 Regulations and standards

8-1 EU Directive

■ CE Marking

This product is affixed with the mark under the following directives.

- **EMC Directive**

  This product is conducted EMC testing under the conditions specified in "Example of motor and driver installation and wiring" on p.34. The conformance of your mechanical equipment with the EMC Directive will vary depending on such factors as the configuration, wiring, and layout for other control system devices and electrical parts used with this product. It therefore must be verified through conducting EMC measures in a state where all parts including this product have been installed in the equipment.

- **RoHS Direcstive**

  This product does not contain the substances exceeding the restriction values.

9 Preparation

This chapter explains the items you should check, as well as the name and function of each part.

9-1 Checking the product

Verify that the items listed below are included. Report any missing or damaged items to the Oriental Motor sales office from which you purchased the product.
The unit models and corresponding motor/driver combinations are listed on p.19.

- **Motor**
  - Motor ..... 1 unit
  - Varistor 1 piece*1
  - Motor connector lead wires [0.6 m (2 ft.), 5 pins] 1 piece*2
  - Encoder connector lead wires [0.6 m (2 ft.), 8 pins] 1 piece*3
  - CN5 connector lead wires [0.6 m (2 ft.), 9 pins] 1 piece*4
  - Instructions and Precautions for Safe Use ..... 1 copy

*1 Item included with motors with electromagnetic brake only.
*2 Item included with connector-type motor units only.
*3 Item included with motors with encoder only. [□20 mm (0.79 in.), □28 mm (1.10 in.)]
*4 Item included with motor units with encoder only.

- **Driver**
  - Driver ..... 1 unit
  - CN1 connector (3 pins) ..... 1 piece
  - CN2 connector cable [1 m (3.3 ft.), 40 pins] ..... 1 piece
  - CN4 connector lead wires [0.6 m (2 ft.), 5 pins] ..... 1 piece
  - Instructions and Precautions for Safe Use ..... 1 copy

9-2 Combinations of motors and drivers

When purchasing a motor and driver package, check the package model name against the model name described on the package label.
Check the model number of the motor and driver against the number shown on the nameplate.
- The box (□) in the model name indicates **A** (single shaft) or **B** (double shaft)
- For geared type, the box (■) in the model name indicates a number of the gear ratio.

■ High-resolution type

Frame size [mm (in.)]	Model	Motor model	Driver model
□28 (1.10)	**CRK523PM□KD**	**PK523PM□**	**CRD503-KD**
	CRK524PM□KD	**PK524PM□**	
	CRK525PM□KD	**PK525PM□**	
	CRK523HPM□KD	**PK523HPM□**	**CRD507H-KD**
	CRK524HPM□KD	**PK524HPM□**	
	CRK525HPM□KD	**PK525HPM□**	
□42 (1.65)	**CRK544PM□KD**	**PK544PM□**	**CRD507-KD**
	CRK546PM□KD	**PK546PM□**	
□60 (2.36)	**CRK564PM□KD**	**PK564PM□**	**CRD514-KD**
	CRK566PM□KD	**PK566PM□**	
	CRK569PM□KD	**PK569PM□**	

■ High-torque type

Frame size [mm (in.)]	Model	Motor model	Driver model
□20 (0.79)	CRK513P□KD	PK513P□	CRD503-KD
□28 (1.10)	CRK523P□KD	PK523P□	CRD503-KD
	CRK525P□KD	PK525P□	
	CRK523HP□KD	PK523HP□	CRD507H-KD
	CRK525HP□KD	PK525HP□	
□42 (1.65)	CRK544P□KD	PK544P□	CRD507-KD
	CRK546P□KD	PK546P□	

■ High-torque type with encoder

Frame size [mm (in.)]	Model	Motor model	Driver model
□20 (0.79)	CRK513PRKD2	PK513PA-R2GL	CRD503-KD
□28 (1.10)	CRK523PRKD2	PK523PA-R2GL	CRD503-KD
	CRK525PRKD2	PK525PA-R2GL	
	CRK523HPRKD2	PK523HPA-R2GL	CRD507H-KD
	CRK525HPRKD2	PK525HPA-R2GL	
□42 (1.65)	CRK544PRKD	PK544PA-R23L	CRD507-KD
	CRK546PRKD	PK546PA-R23L	

■ Standard type with encoder

Frame size [mm (in.)]	Model	Motor model	Driver model
□42 (1.65)	CRK543RKD	PK543AW-R23L	CRD507-KD
	CRK544RKD	PK544AW-R23L	
	CRK545RKD	PK545AW-R23L	
□60 (2.36)	CRK564RKD	PK564AW-R23L	CRD514-KD
	CRK566RKD	PK566AW-R23L	
	CRK569RKD	PK569AW-R23L	

■ Standard type with electromagnetic brake

Frame size [mm (in.)]	Model	Motor model	Driver model
□42 (1.65)	CRK543AMKD	PK543AWM	CRD507-KD
	CRK544AMKD	PK544AWM	
	CRK545AMKD	PK545AWM	
□60 (2.36)	CRK564AMKD	PK564AWM	CRD514-KD
	CRK566AMKD	PK566AWM	
	CRK569AMKD	PK569AWM	

■ Standard type

Frame size [mm (in.)]	Model	Motor model	Driver model
□42 (1.65)	CRK543□KD	PK543□W	CRD507-KD
	CRK544□KD	PK544□W	
	CRK545□KD	PK545□W	
□60 (2.36)	CRK564□KD	PK564□W	CRD514-KD
	CRK566□KD	PK566□W	
	CRK569□KD	PK569□W	

■ TH geared type

Frame size [mm (in.)]	Model	Motor model	Driver model
□28 (1.10)	CRK523PAKD-T■	PK523PA-T■	CRD503-KD
□42 (1.65)	CRK543AKD-T■	PK543AW-T■	CRD507-KD
□60 (2.36)	CRK564AKD-T■	PK564AW-T■	CRD514-KD

■ PS geared type

Frame size [mm (in.)]	Model	Motor model	Driver model
ø22 (0.87)	CRK513PAKD-PS■	PK513PA-PS■	CRD503-KD
□28 (1.10)	CRK523PAKD-PS■	PK523PA-PS■	CRD503-KD
□42 (1.65)	CRK543AKD-PS■	PK543AW-PS■	CRD507-KD
	CRK545AKD-PS■	PK545AW-PS■	
□60 (2.36)	CRK564AKD-PS■	PK564AW-PS■	CRD514-KD
	CRK566AKD-PS■	PK566AW-PS■	

■ PN geared type

Frame size [mm (in.)]	Model	Motor model	Driver model
□28 (1.10)	CRK523PAKD-N■	PK523PA-N■	CRD503-KD
□42 (1.65)	CRK544AKD-N■	PK544AW-N■	CRD507-KD
□60 (2.36)	CRK564AKD-N■	PK564AW-N■	CRD514-KD
	CRK566AKD-N■	PK566AW-N■	

■ Harmonic geared type

Frame size [mm (in.)]	Model	Motor model	Driver model
□20 (0.79)	CRK513PAKD-H■	PK513PA-H■S	CRD503-KD
□30 (1.18)	CRK523PAKD-H■	PK523HPA-H■S	CRD507H-KD
□42 (1.65)	CRK543AKD-H■	PK543AW-H■S	CRD507-KD
□60 (2.36)	CRK564AKD-H■	PK564AW-H■S	CRD514-KD

9-3 Names and functions of parts

■ Motor (Example: PK56)

● **Standard type**

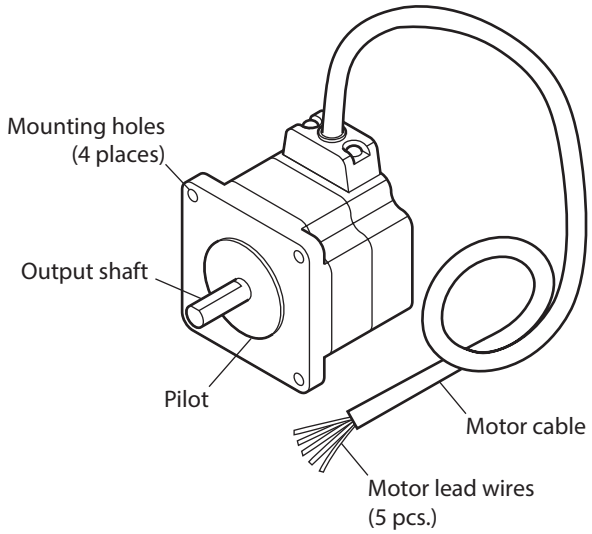

● **Standard type with encoder**

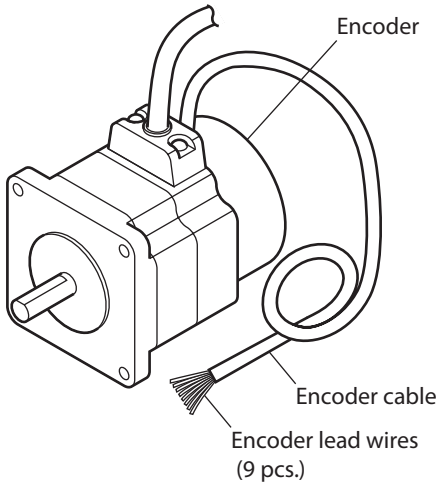

■ Driver

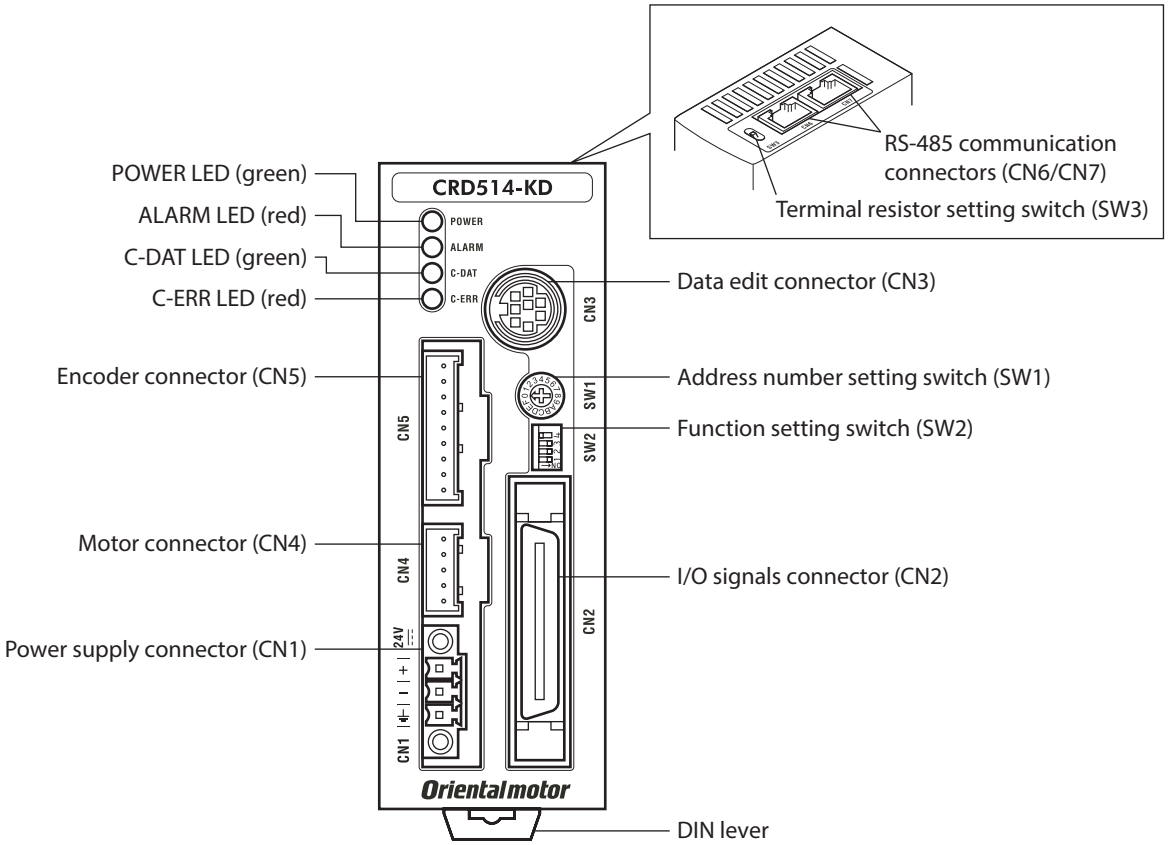

Name	Description	Reference
POWER LED (green)	This LED is lit while the main power is input.	–
ALARM LED (red)	This LED will blink when an alarm generates (a protective function is triggered). You can check the generated alarm by counting the number of times the LED blinks.	p.177
C-DAT LED (green)	This LED will blink or lit steadily when the driver is communicating with the host control device properly via RS-485 communication.	–
C-ERR LED (red)	This LED will lit when a RS-485 communication error occurs with the host control device.	–
Address number setting switch (SW1)	Use this switch when controlling the system via RS-485 communication. Sets the address number of RS-485 communication. (Factory setting: 0)	p.109
Function setting switch (SW2)	Use this switches when controlling the system via RS-485 communication. Nos.1 to 3: Set the baud rate of RS-485 communication. (Factory setting: ON) No.4: Sets the connection destination of RS-485 communication. (Factory setting: OFF)	
Terminal resistor setting switch (SW3)	Use this switch when controlling the system via RS-485 communication. Set the terminal resistor (120 Ω) of RS-485 communication. (Factory setting: OFF)	p.110
Power supply connector (CN1)	Connects main power supply (+24 VDC) using the included connector.	p.39
I/O signals connector (CN2)	Connects I/O signals using the included cable/connector assembly.	p.40
Data edit connector (CN3)	Connects a PC in which the **MEXE02** has been installed, or the **OPX-2A**.	p.43
Motor connector (CN4)	Connects the motor.	p.35 p.36
Encoder connector (CN5)	Connects the encoder.	p.43
RS-485 communication connectors (CN6/CN7)	Connects the RS-485 communication cable.	p.46

2 Installation and connection

This part explains the installation method of the product, the mounting method of a load and the connection method as well as I/O signals.

◆Table of contents

1 Installation 26

1-1 Location for installation 26
1-2 Installing the motor 26
1-3 Installing a load 28
1-4 Permissible radial load and permissible axial load 29
1-5 Installing the driver 32
1-6 Installing and wiring in compliance with EMC Directive 33

2 Connection 35

2-1 Connecting the motor 35
2-2 Connecting the connector-type motor 36
2-3 Connecting the electromagnetic brake 38
2-4 Connecting the power supply and grounding the driver 39
2-5 Connecting the I/O signals 40
2-6 Connecting the data setter 43
2-7 Connecting the encoder 43
2-8 Connecting the RS-485 communication cable 46

3 Explanation of I/O signals 47

3-1 Input signals 47
3-2 Output signals 53

1 Installation

This chapter explains the installation location and installation method of the motor and driver, and installing a load. Also covered in this section are the installation and wiring methods that are in compliance with the relevant EMC Directives.

1-1 Location for installation

The driver is designed and manufactured for installation in equipment.
Install it in a well-ventilated location that provides easy access for inspection. The location must also satisfy the following conditions:

- Inside an enclosure that is installed indoors (provide vent holes)
- Operating ambient temperature
  Motor: –10 to +50 °C (+14 to +122 °F) (non-freezing)
  PS geared type of ø22 mm (ø0.87 in.): 0 to +50 °C (+32 to +122 °F) (non-freezing)
  Harmonic geared type: 0 to +40 °C (+32 to +104 °F) (non-freezing)
  Driver: 0 to +40 °C (+32 to +104 °F) (non-freezing)
- Operating ambient humidity 85% or less (non-condensing)
- Area that is free of explosive atmosphere or toxic gas (such as sulfuric gas) or liquid
- Area not exposed to direct sun
- Area free of excessive amount of dust, iron particles or the like
- Area not subject to splashing water (rain, water droplets), oil (oil droplets) or other liquids
- Area free of excessive salt
- Area not subject to continuous vibration or excessive shocks
- Area free of excessive electromagnetic noise (from welders, power machinery, etc.)
- Area free of radioactive materials, magnetic fields or vacuum
- Up to 1,000 m (3,300 ft.) above sea level

1-2 Installing the motor

The motor can be installed in any direction.
Install the motor onto an appropriate flat metal plate having excellent vibration resistance and heat conductivity.
When installing the motor, secure it with four screws (not included) through the four mounting holes.
Do not leave a gap between the motor and metal plate.

- **Installation method A**

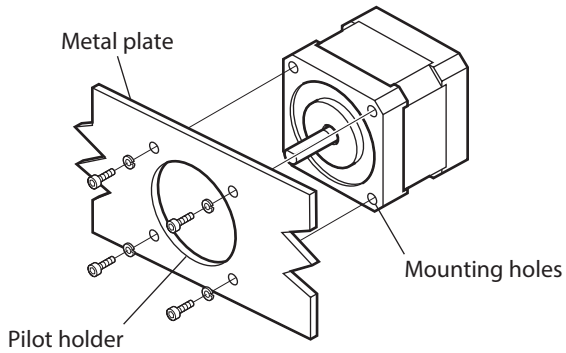

- **Installation method B**

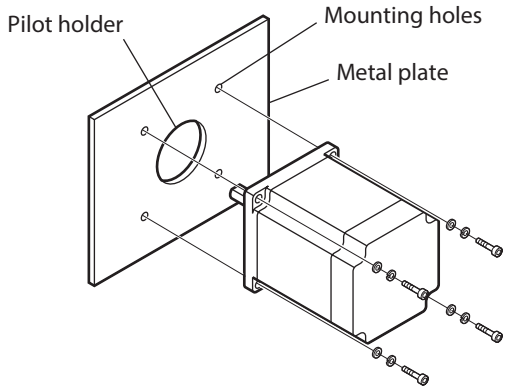

Note

- Insert the pilot located on the motor's installation surface into the pilot holder.
- When installing the motor, do not apply strong force using a hammer or other tools. Doing so may cause damage to the motor.

■ Screw size, tightening torque and installation method

Values of the tightening torque are recommended. Tighten the screws with a suitable torque according to the design conditions of the metal plate to be installed.

- The box (□) in the model name indicates **A** (single shaft) or **B** (double shaft).
- For geared type, the box (■) in the model name indicates a number of the gear ratio.

Frame size [mm (in.)]	Type	Motor model	Nominal size	Tightening torque [N·m (oz-in)]	Effective depth of screw thread [mm (in.)]	Installation method
□20 (0.79)	High-torque type	**PK513P□**	M2	0.25 (35)	2.5 (0.098)	A
	High-torque type with encoder	**PK513PA-R2GL**				
	Harmonic geared	**PK513P□-H■S**	M2	0.25 (35)	5 (0.197)	
ø22 (0.87)	**PS** geared	**PK513P□-PS■**	M2	0.25 (35)	3.5 (0.138)	A
□28 (1.10)	High-resolution type	**PK523PM□** **PK524PM□** **PK525PM□** **PK523HPM□** **PK524HPM□** **PK525HPM□**	M2.5	0.5 (71)	2.5 (0.098)	A
	High-torque type	**PK523P□** **PK525P□** **PK523HP□** **PK525HP□**				
	High-torque type with encoder	**PK523PA-R2GL** **PK525PA-R2GL** **PK523HPA-R2GL** **PK525HPA-R2GL**				
	TH geared	**PK523P□-T■**	M2.5	0.5 (71)	4 (0.157)	
	PS geared	**PK523P□-PS■**	M3	1 (142)	6 (0.236)	
	PN geared	**PK523P□-N■**				
□30 (1.18)	Harmonic geared	**PK523HP□-H■S**	M3	1 (142)	6 (0.236)	A
□42 (1.65)	High-resolution type	**PK544PM□** **PK546PM□**	M3	1 (142)	4.5 (0.177)	A
	High-torque type	**PK544P□** **PK546P□**				
	High-torque type with encoder	**PK544PA-R23L** **PK546PA-R23L**				
	Standard type with encoder	**PK543AW-R23L** **PK544AW-R23L** **PK545AW-R23L**				
	Standard type with electromagnetic brake	**PK543AWM** **PK544AWM** **PK545AWM**				
	Standard type	**PK543□W** **PK544□W** **PK545□W**				
	TH geared	**PK543□W-T■**	M4	2 (280)	8 (0.315)	
	PS geared	**PK543□W-PS■** **PK545□W-PS■**				
	PN geared	**PK544□W-N■**				
	Harmonic geared	**PK543□W-H■S**				
□60 (2.36)	High-resolution type	**PK564PM□** **PK566PM□** **PK569PM□**	M4	2 (280)	–	B

Frame size [mm (in.)]	Type	Motor model	Nominal size	Tightening torque [N·m (oz-in)]	Effective depth of screw thread [mm (in.)]	Installation method
□60 (2.36)	Standard type with encoder	**PK564AW-R23L** **PK566AW-R23L** **PK569AW-R23L**	M4	2 (280)	–	B
	Standard type with electromagnetic brake	**PK564AWM** **PK566AWM** **PK569AWM**				
	Standard type	**PK564□W** **PK566□W** **PK569□W**				
	TH geared	**PK564□W-T■**	M4	2 (280)	8 (0.315)	A
	PS geared	**PK564□W-PS■** **PK566□W-PS■**	M5	2.5 (350)	10 (0.394)	
	PN geared	**PK564□W-N■** **PK566□W-N■**				
	Harmonic geared	**PK564□W-H■S**				

1-3 Installing a load

When connecting a load to the motor, align the centers of the motor's output shaft and load shaft. Also, keep the radial load and axial load to the permissible values or below.

Note

- When coupling the load to the motor, pay attention to the centering of the shafts, belt tension, parallelism of the pulleys, and so on. Securely tighten the coupling and pulley set screws.
- Be careful not to damage the output shaft or bearings (ball bearing) when installing a coupling or pulley to the motor's output shaft.
- Do not modify or machine the motor's output shaft. Doing so may damage the bearings and destroy the motor.
- If you are using a motor with encoder, an optical encoder is housed in the motor. To prevent damage to the encoder, handle the motor with care and avoid strong impact to the motor output shaft when transporting the motor or installing the load.
- Do not apply strong force using hammer or other tools when removing the parallel key. Doing so may damage the motor output shaft and bearings (ball bearings).

- **Using a coupling**

  Align the centers of the motor's output shaft and load shaft in a straight line.

- **Using a belt drive**

  Align the motor's output shaft and load shaft in parallel with each other, and position both pulleys so that the line connecting their centers is at a right angle to the shafts.

- **Using a gear drive**

  Align the motor's output shaft and gear shaft in parallel with each other, and let the gears mesh at the center of the tooth widths.

- **Using a fastening key (geared motor)**

  Connect a load to the gear output shaft having a key groove, first provide a key groove on the load and fix the load with the gear output shaft using the included key.

- **Installing on the flange surface (Harmonic geared type)**

  With a Harmonic geared type, a load can be installed directly to the gear using the load mounting holes provided on the flange surface.

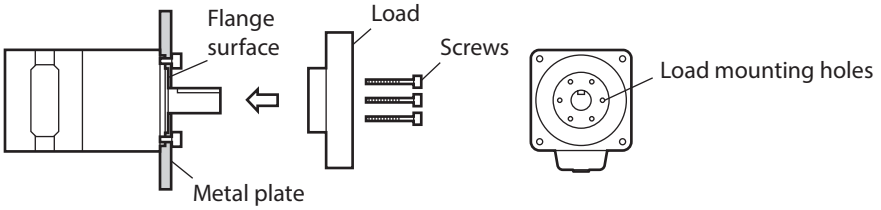

Motor model	Nominal size	Number of screws	Tightening torque [N·m (oz-in)]	Effective depth of screw thread [mm (in.)]
PK513	M2	3	0.35 (49)	3 (0.118)
PK523	M3	4	1.4 (198)	4 (0.157)
PK543	M3	6	1.4 (198)	5 (0.20)
PK564	M4	6	2.5 (350)	6 (0.236)

Note

- When installing a load on the flange surface, the load cannot also be affixed using the keyway (or milled surface) in the output shaft.
- Design an appropriate installation layout so that the load will not contact the metal plate or screws used for installing the motor.

1-4 Permissible radial load and permissible axial load

The radial load and the axial load on the motor's output shaft must be kept under the permissible values listed table.

- The box (□) in the model name indicates **A** (single shaft) or **B** (double shaft).
- For geared type, the box (■) in the model name indicates a number of the gear ratio.

Note

- Failure due to fatigue may occur when the motor bearings and output shaft are subject to repeated loading by a radial or axial load that is in excess of the permissible limit.
- The permissible radial load and permissible axial load of the **PS** geared type and **PN** geared type represent the value that the service life of the gear part satisfies 20,000 hours when either of the radial load or axial load is applied to the gear output shaft.

Frame size [mm (in.)]	Type	Motor model	Gear ratio	Permissible radial load [N (lb.)] Distance from the tip of motor output shaft [mm (in.)] 0 (0)	5 (0.20)	10 (0.39)	15 (0.59)	20 (0.79)	Permissible axial load [N (lb.)]
□20 (0.79)	High-torque type	**PK513P□**	–	12 (2.7)	15 (3.3)	–	–	–	3 (0.67)
	High-torque type with encoder	**PK513PA-R2GL**	–						
	Harmonic geared	**PK513P□-H■S**	All gear ratio	50 (11.2)	75 (16.8)	–	–	–	60 (13.5)
ø22 (0.87)	**PS** geared	**PK513P□-PS■**	All gear ratio	20 (4.5)	30 (6.7)	–	–	–	20 (4.5)
□28 (1.10)	High-resolution type	**PK523PM□** **PK523HPM□** **PK524PM□** **PK524HPM□** **PK525PM□** **PK525HPM□**	–	25 (5.6)	34 (7.6)	52 (11.7)	–	–	5 (1.12)
	High-torque type	**PK523P□** **PK523HP□** **PK525P□** **PK525HP□**	–						
	High-torque type with encoder	**PK523PA-R2GL** **PK523HPA-R2GL** **PK525PA-R2GL** **PK525HPA-R2GL**	–						
	TH geared	**PK523P□-T■**	All gear ratio	15 (3.3)	17 (3.8)	20 (4.5)	23 (18)	–	10 (2.2)
	PS geared	**PK523P□-PS■**	All gear ratio	45 (10.1)	60 (13.5)	80 (18)	100 (22)	–	40 (9)
	PN geared	**PK523P□-N■**	All gear ratio						
□30 (1.18)	Harmonic geared	**PK523HP□-H■S**	All gear ratio	110 (24)	135 (30)	175 (39)	250 (56)	–	140 (31)

Frame size [mm (in.)]	Type	Motor model	Gear ratio	Permissible radial load [N (lb.)] Distance from the tip of motor output shaft [mm (in.)] 0 (0)	5 (0.20)	10 (0.39)	15 (0.59)	20 (0.79)	Permissible axial load [N (lb.)]
□42 (1.65)	High-resolution type	**PK544PM□** **PK546PM□**	–	20 (4.5)	25 (5.6)	34 (7.6)	52 (11.7)	–	10 (2.2)
	High-torque type	**PK544P□** **PK546P□**	–						
	High-torque type with encoder	**PK544PA-R23L** **PK546PA-R23L**	–						
	Standard type with encoder	**PK543AW-R23L** **PK544AW-R23L** **PK545AW-R23L**	–						
	Standard type with electromagnetic brake	**PK543AWM** **PK544AWM** **PK545AWM**	–						
	Standard type	**PK543□W** **PK544□W** **PK545□W**	–						
	TH geared	**PK543□W-T■**	All gear ratio	10 (2.2)	14 (3.1)	20 (4.5)	30 (6.7)	–	15 (3.3)
	PS geared	**PK545□W-PS■**	5	70 (15.7)	80 (18)	95 (21)	120 (27)	–	100 (22)
			7.2	80 (18)	90 (20)	110 (24)	140 (31)	–	
			10	85 (19.1)	100 (22)	120 (27)	150 (33)	–	
		PK543□W-PS■	25	120 (27)	140 (31)	170 (38)	210 (47)	–	
			36	130 (29)	160 (36)	190 (42)	240 (54)	–	
			50	150 (33)	170 (38)	210 (47)	260 (58)	–	
	PN geared	**PK544□W-N■**	5	80 (18)	95 (21)	120 (27)	160 (36)	–	
			7.2	90 (20)	110 (24)	130 (29)	180 (40)	–	
			10	100 (22)	120 (27)	150 (33)	200 (45)	–	
	Harmonic geared	**PK543□W-H■S**	All gear ratio	180 (40)	220 (49)	270 (60)	360 (81)	510 (114)	220 (49)
□60 (2.36)	High-resolution type	**PK564PM□** **PK566PM□** **PK569PM□**	–	90 (20)	100 (22)	130 (29)	180 (40)	270 (60)	20 (4.5)
	Standard type with encoder	**PK564AW-R23L** **PK566AW-R23L** **PK569AW-R23L**	–	63 (14.1)	75 (16.8)	95 (21)	130 (29)	190 (42)	
	Standard type with electromagnetic brake	**PK564AWM** **PK566AWM** **PK569AWM**	–						
	Standard type	**PK564□W** **PK566□W** **PK569□W**	–						
	TH geared	**PK564□W-T■**	All gear ratio	70 (15.7)	80 (18)	100 (22)	120 (27)	150 (33)	40 (9)

Frame size [mm (in.)]	Type	Motor model	Gear ratio	Permissible radial load [N (lb.)] Distance from the tip of motor output shaft [mm (in.)] 0 (0)	5 (0.20)	10 (0.39)	15 (0.59)	20 (0.79)	Permissible axial load [N (lb.)]
□60 (2.36)	**PS** geared	**PK566□W-PS■**	5	170 (38)	200 (45)	230 (51)	270 (60)	320 (72)	200 (45)
			7.2	200 (45)	220 (49)	260 (58)	310 (69)	370 (83)	
			10	220 (49)	250 (56)	290 (65)	350 (78)	410 (92)	
		PK564□W-PS■	25	300 (67)	340 (76)	400 (90)	470 (105)	560 (126)	
			36	340 (76)	380 (85)	450 (101)	530 (119)	630 (141)	
			50	380 (85)	430 (96)	500 (112)	600 (135)	700 (157)	
	PN geared	**PK566□W-N■**	5	240 (54)	260 (58)	280 (63)	300 (67)	330 (74)	
			7.2	270 (60)	290 (65)	310 (69)	340 (76)	370 (83)	
			10	300 (67)	320 (72)	350 (78)	380 (85)	410 (92)	
		PK564□W-N■	25	410 (92)	440 (99)	470 (105)	520 (117)	560 (126)	
			36	360 (81)	410 (92)	480 (108)	570 (128)	640 (144)	
			50	360 (81)	410 (92)	480 (108)	570 (128)	700 (157)	
	Harmonic geared	**PK564□W-H■S**	All gear ratio	320 (72)	370 (83)	440 (99)	550 (123)	720 (162)	450 (101)

■ Permissible moment load of the Harmonic geared type

When installing an arm or table on the flange surface, calculate the moment load using the formula below if the flange surface receives any eccentric load. The moment load should not exceed the permissible value specified in the table.

Moment load: M [N·m (oz-in)] = F × L

Motor model	Permissible moment load [N·m (oz-in)]
PK513	0.7 (99)
PK523	2.9 (410)
PK543	5.6 (790)
PK564	11.6 (1,640)

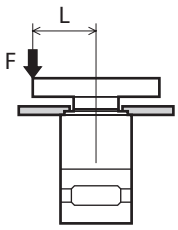

1-5 Installing the driver

■ Installation direction

Mount the driver to a 35 mm (1.38 in.) width DIN rail. Provide 50 mm (1.97 in.) clearances in the horizontal and vertical directions between the driver and enclosure or other equipment within the enclosure.
Refer to the figure for the required distances between adjacent drivers when two or more drivers are installed in parallel.

Note Be sure to install (position) the driver vertically. When the driver is installed in any position other than vertical, the heat radiation effect of the driver will drop.

● CRD503-KD, CRD507-KD, CRD507H-KD

Horizontal direction: Can be placed in contact with each other.
Vertical direction: Provide a clearance of 50 mm (1.97 in.) or more.

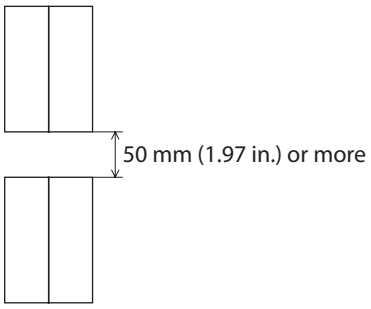

● CRD514-KD

Horizontal direction: Provide a clearance of 20 mm (0.79 in.) or more.
Vertical direction: Provide a clearance of 50 mm (1.97 in.) or more.

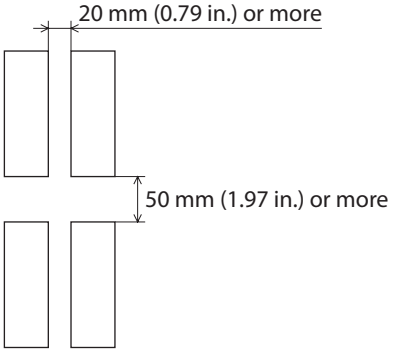

● When using the CRD514-KD in parallel with another driver

Another unit can be placed in contact with the right side of **CRD514-KD**.
Provide a clearance of 20 mm (0.79 in.) or more on the left side of **CRD514-KD** where a heat sink is located.

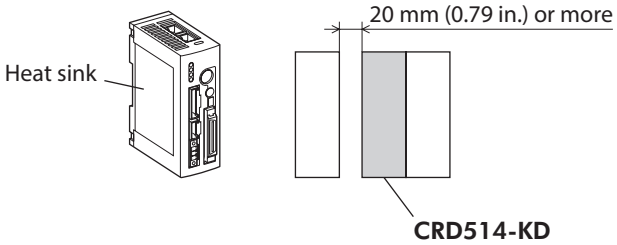

■ Installation method

1. Pull down the DIN lever of the driver and lock it. Hang the hook at the rear to the DIN rail.
2. Hold the driver to the DIN rail, and push up the DIN lever to secure.
3. Secure both sides of the driver using end plates.

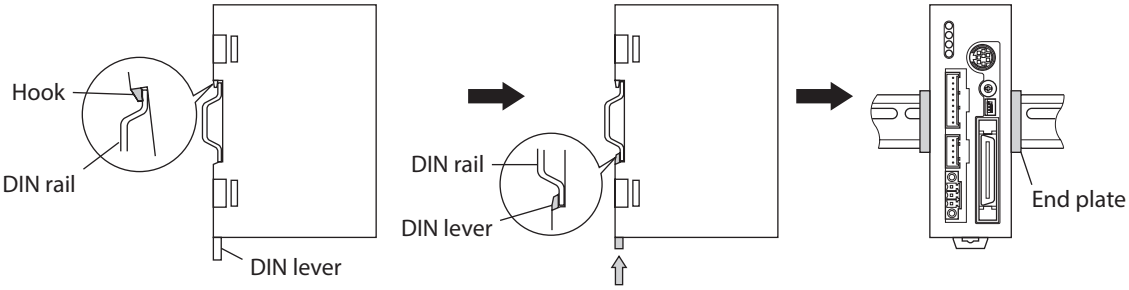

Removing from DIN rail

Pull the DIN lever down until it locks using a slotted screwdriver, and lift the bottom of the driver to remove it from the rail. Use a force of about 10 to 20 N (2.2 to 4.5 lb.) to pull the DIN lever down to lock it. Excessive force may damage the DIN lever.

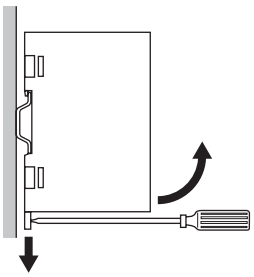

1-6 Installing and wiring in compliance with EMC Directive

Effective measures must be taken against the EMI that the motor and driver may give to adjacent control-system equipment, as well as the EMS of the motor and driver itself, in order to prevent a serious functional impediment in the machinery. The use of the following installation and wiring methods will enable the motor and driver to be compliant with the EMC directive.
Oriental Motor conducts EMC measurements its motors and drivers in accordance with "Example of motor and driver installation and wiring" on p.34. The user is responsible for ensuring the machine's compliance with the EMC Directive, based on the installation and wiring explained below.

⚠CAUTION This equipment is not intended for use in residential environments nor for use on a low-voltage public network supplied in residential premises, and it may not provide adequate protection to radio reception interference in such environments.

■ Power supply

This products are specifically designed for DC power supply input.
Use a DC power supply (such as a switching power supply) compliant with the EMC Directive.

■ Connecting noise filter for power supply line

- Connect a noise filter in the DC power supply input part to prevent the noise generated in the driver from propagating externally through the power supply line.
- When using a power supply transformer, be sure to connect a noise filter to the AC input side of the power supply transformer.
- For a noise filter, use HF2010A-UPF (SOSHIN ELECTRIC CO., LTD.), FN2070-10-06 (Schaffner EMC) or equivalent product.
- Install the noise filter as close to the AC input terminal of DC power supply as possible. Use cable clamps and other means to secure the input and output cables (AWG18: 0.75 mm^2 or more) firmly to the surface of the enclosure.
- Connect the ground terminal of the noise filter to the grounding point, using as thick and short a wire as possible.
- Do not place the AC input cable (AWG18: 0.75 mm^2 or more) parallel with the noise filter output cable (AWG18: 0.75 mm^2 or more). Parallel placement will reduce noise filter effectiveness if the enclosure's internal noise is directly coupled to the power supply cable by means of stray capacitance.

■ Ferrite core

If the **OPX-2A** is used, install ferrite cores. Ferrite cores have the effect of reducing external noise. For a ferrite core, use ZCAT3035-1330 (TDK Corporation) or equivalent product.
Install ferrite cores as close to the **OPX-2A** as possible.

■ How to ground

The cable used to ground the driver and noise filter must be as thick and short as possible so that no potential difference is generated. Choose a large, thick and uniformly conductive surface for the grounding point.
Install the motor onto a grounded metal surface.

■ Wiring the power supply cable and signal cable

- Use a shielded cable of AWG22 (0.3 mm^2) or more for the power supply cable, and keep it as short as possible.
- Use a included connector cable for the I/O signals cable, and keep it as short as possible.
- To ground a power supply cable, use a metal clamp or similar device that will maintain contact with the entire circumference of the cable. Attach a cable clamp as close to the end of the cable as possible, and connect it as shown in the figure.

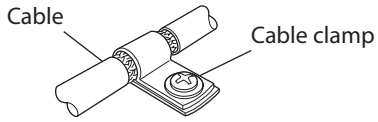

■ Notes about installation and wiring

- Connect the motor, driver and other peripheral control equipment directly to the grounding point so as to prevent a potential difference from developing between grounds.
- When relays or electromagnetic switches are used together with the system, use noise filters and CR circuits to suppress surges generated by them.
- Keep cables as short as possible without coiling and bundling extra lengths.
- Place the power cables such as the motor and power supply cables as far apart [100 mm (3.94 in.)] as possible from the signal cables. If they have to cross, cross them at a right angle. Place the AC input cable and output cable of a noise filter separately from each other.

■ Example of motor and driver installation and wiring

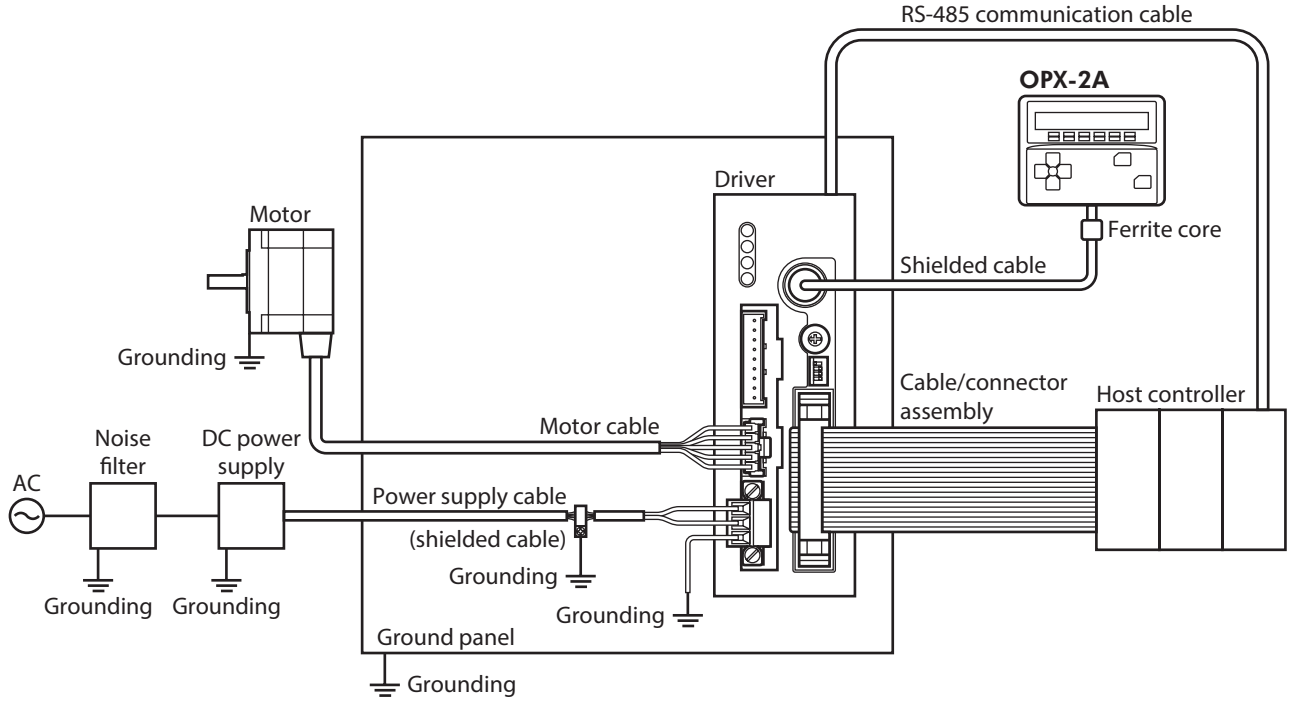

■ Precautions about static electricity

Static electricity may cause the driver to malfunction or suffer damage. While the driver is receiving power, handle the driver with care and do not come near or touch the driver.
Always use an insulated slotted screwdriver to adjust the driver's switches.

Note The driver uses parts that are sensitive to electrostatic charge. Before touching the driver, turn off the power to prevent electrostatic charge from generating. If an electrostatic charge is impressed on the driver, the driver may be damaged.

2 Connection

This chapter explains how to connect the power supply, driver, motor, I/O signals as well as grounding method.

⚠WARNING For protection against electric shock, do not turn on the power supply until the wiring is completed.

Note
- Have the connector plugged in securely. Insecure connector connection may cause malfunction or damage to the motor or driver.
- The CN2/CN4/CN5 connector have a lock mechanism. When removing these connectors, release the connector lock first. Forcibly pulling out the connector without releasing the connector lock may damage the connector.
- To cycle the power or plugging/unplugging the connector, turn off the power and then wait for at least 5 seconds.
- If the motor cable or power supply cable generates an undesirable amount of noise, shield the cable or install a ferrite core.

2-1 Connecting the motor

■ Applicable product

- Standard type with encoder
- Standard type with electromagnetic brake
- Standard type
- Geared type (**PK543**, **PK544**, **PK564**, **PK566**)

■ Connecting method

1. Connect the included CN4 connector lead wires (5 pins) to the motor connector (CN4) on the driver.
2. Connect the motor lead wires and CN4 connector lead wires.
   The customer must provide the terminal block, connectors and other items needed to interconnect the lead wires.

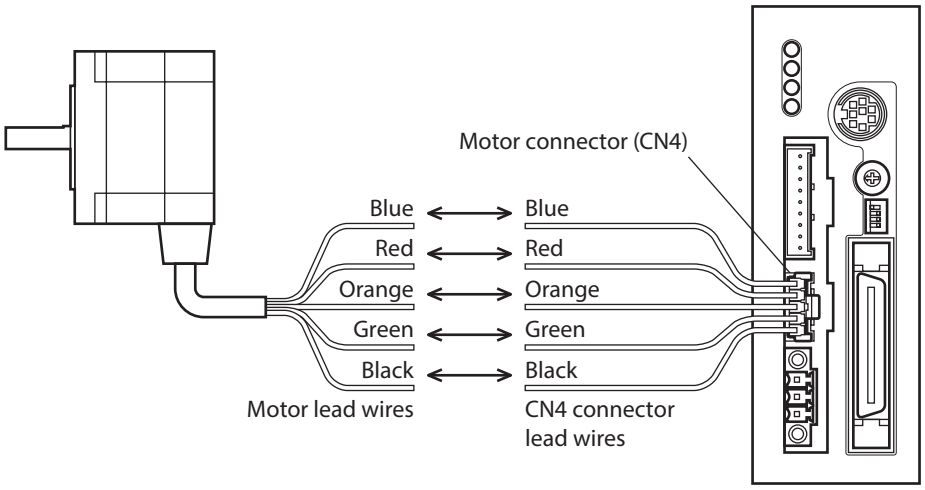

Note Keep 10 m (32.8 ft.) or less for the wiring distance between the motor and driver.

■ CN4 pin assignments

Pin No.	Connection destination
1	Blue motor lead
2	Red motor lead
3	Orange motor lead
4	Green motor lead
5	Black motor lead

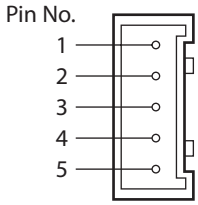

■ Composition of CN4 connector lead wires

There are two types of applicable connectors, and either one shown in the table is used.
Be sure to use a connector housing, contact, and designated crimp tool in the combinations shown in the table.
Manufacturer: Molex, LLC

	Applicable connector 1	Applicable connector 2
Connector housing	51103-0500	51163-0500
Contact	50351-8000	50752-8200
Designated crimp tool	57295-5000 or 63811-8100	200218-4900
Conductor size	AWG22 (0.3 mm^2)	

2-2 Connecting the connector-type motor

■ Applicable product

- High-resolution type
- High-torque type
- High-torque type with encoder
- Geared type (**PK513P**, **PK523P**)

■ Connecting method

1. Connect the included CN4 connector lead wires (5 pins) to the motor connector (CN4) on the driver.
2. Connect the included motor connector lead wires (5 pins) to the motor.
3. Connect the motor connector lead wires and CN4 connector lead wires.
   The customer must provide the terminal block, connectors and other items needed to interconnect the lead wires.

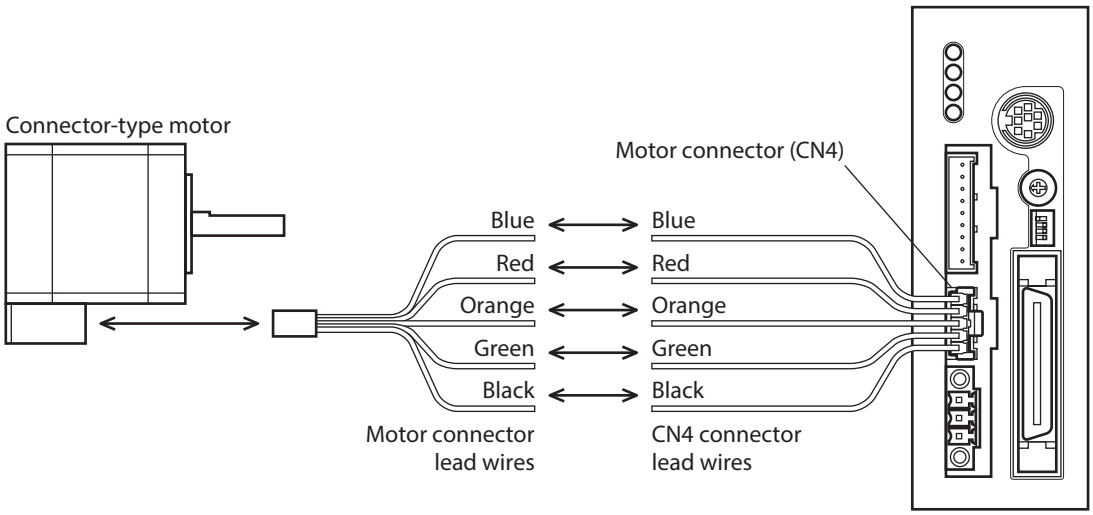

Note Keep 10 m (32.8 ft.) or less for the wiring distance between the motor and driver.

■ Connector pin assignments of connector-type motor

Pin No.	Description
1	Blue motor lead
2	Red motor lead
3	Orange motor lead
4	Green motor lead
5	Black motor lead

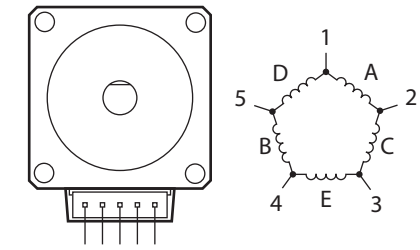

■ Composition of motor connector lead wires

● **Frame size: □20 mm (0.79 in.) [PK51], ø22 mm (0.87 in.) [PK51], □28 mm (1.10 in.) [PK52]**

Manufacturer: Molex, LLC

Connector housing	51065-0500
Contact	50212-8100
Designated crimp tool	57176-5000 or 63819-0500
Conductor size	AWG24 (0.2 mm^2)

● **Frame size: □42 mm (1.65 in.) [PK54]**

There are two types of applicable connectors, and either one shown in the table is used.
Be sure to use a connector housing, contact, and designated crimp tool in the combinations shown in the table.
Manufacturer: Molex, LLC

	Applicable connector 1	Applicable connector 2
Connector housing	51103-0500	51163-0500
Contact	50351-8100	50752-8200
Designated crimp tool	57295-5000 or 63811-8100	200218-4900
Conductor size	AWG22 (0.3 mm^2)	

● **Frame size: □60 mm (2.36 in.) [PK56]**

Manufacturer: J.S.T. Mfg. Co., Ltd.

Connector housing	VHR-5N
Contact	BVH-21T-P1.1
Designated crimp tool	YC-160R
Conductor size	AWG22 (0.3 mm^2)

Note

- When connecting a motor, attach the cable in such a way as to prevent the connection point from receiving stress due to flexing of the cable. Make the cable's radius of curvature as large as possible.
- When disconnecting the connector from the connector type motor, pull the connector horizontally along the output shaft to remove. The motor may be damaged if force is applied in any other direction.
- When removing the connection cable with the connector lock, release the lock part of the connector. Pulling out the connector while it is locked may cause damage to the motor or connector.

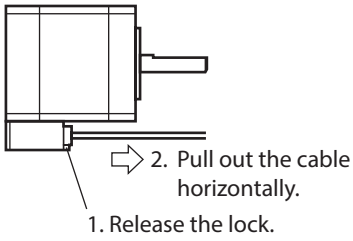

2-3 Connecting the electromagnetic brake

■ Connecting the power supply for electromagnetic brake

The electromagnetic brake operates via the ON/OFF status of the DC power supply. Provide a DC power supply of 24 VDC±5% 0.08 A or more for the **PK54**, or 24 VDC±5% 0.25 A or more for the **PK56**, for use exclusively for the electromagnetic brake.
Use a shielded cable of AWG24 (0.2 mm^2) or more to connect the electromagnetic brake to the DC power supply, keeping the length as short as possible.

■ Connecting method

Connect two lead wires [600 mm (23.6 in.)] from the motor to the DC power supply.

1. Connect the red/white lead to the +24 VDC terminal of the DC power supply, and connect the black/white lead to the GND terminal.
2. Connect the varistor (included) in parallel between the +24 VDC terminal and the GND terminal.
   The varistor does not have polarity.

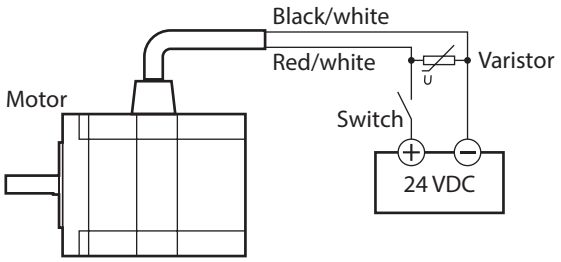

Note

- Applying a voltage over the specification will increase the temperature rise in the electromagnetic brake and may damage the motor. Conversely, insufficient voltage may prevent the brake from releasing.
- Be sure to connect the varistor to protect the switch contacts and prevent noise.
- The lead wires for the electromagnetic brake are polarized. Connecting the lead wires in reverse polarity will not properly operate the electromagnetic brake.
- Provide separate power supplies for the I/O signals and the electromagnetic brake.

■ Operating the electromagnetic brake

Operate the electromagnetic brake as follows:

1. Turn on the driver power and switch ON the excitation to excite the motor.
2. Before inputting operation commands, turn on the electromagnetic brake power and release the electromagnetic brake.
   The motor is now ready to run.
3. When holding the load in position using the electromagnetic brake following motor operation, turn off the electromagnetic brake power after confirming that the motor has stopped.

Note

Apply the electromagnetic brake only after the motor has stopped. Do not use the brake to bring the moving motor to a halt. Repeated braking for such a purpose will wear the brake hub excessively, causing a decrease in its ability to hold.

2-4 Connecting the power supply and grounding the driver

Use the included CN1 connector (3 pins) to connect the power supply cable (AWG22: 0.3 mm^2) to the power supply connector (CN1) on the driver.

Note

- When connecting, check the silk screen of the driver and pay attention to the polarity of the power supply. Reverse-polarity connection may cause damage to the driver. The power-supply circuit and the RS-485 communication circuit are not insulated. Therefore, when controlling multiple drivers via RS-485 communication, the reverse polarity of the power supply will cause a short circuit and may result in damage to the drivers.
- Do not wire the power supply cable of the driver in the same cable duct with other power line or motor cable. Doing so may cause malfunction due to noise.

■ Power supply current capacity

Use a power supply that can supply the current capacity below.

Driver model	Input power supply voltage	Current capacity
CRD503-KD	+24 VDC±10 %	0.7 A or more
CRD507-KD **CRD507H-KD**		1.4 A or more
CRD514-KD		2.5 A or more

■ Grounding the driver

Ground the driver's Frame Ground Terminal (FG) as necessary.
Ground using a wire of AWG24 to 16 (0.2 to 1.25 mm^2), and do not share the protective earth terminal with a welder or any other power equipment.

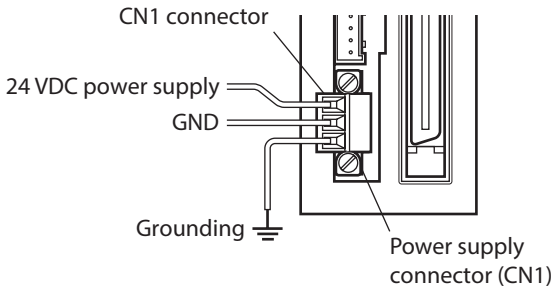

■ CN1 pin assignments

Pin No.	Name	Description
1	+24 VDC	+24 VDC power supply input
2	GND	Power supply GND
3	FG	Frame Ground

■ Connecting method

1. Strip the insulation cover of the lead wire by 7 mm (0.28 in.)
2. Insert each lead wire into the CN1 connector and tighten the screws using a slotted screwdriver.
3. Insert the CN1 connector into CN1 and tighten the screws using a slotted screwdriver.

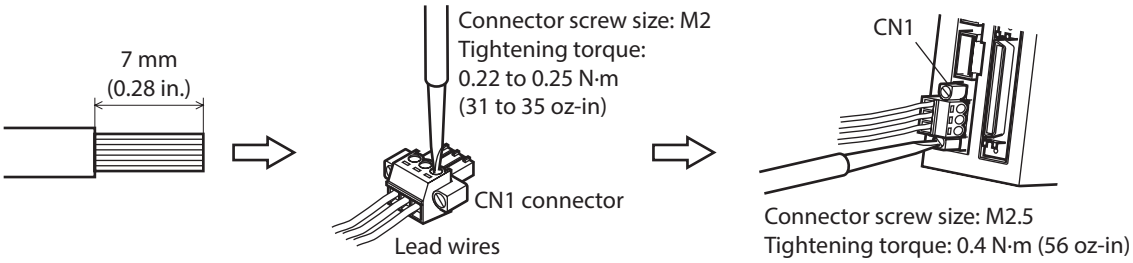

2-5 Connecting the I/O signals

Connect the included CN2 connector cable (40 pins) to the I/O signals connector (CN2) on the driver.

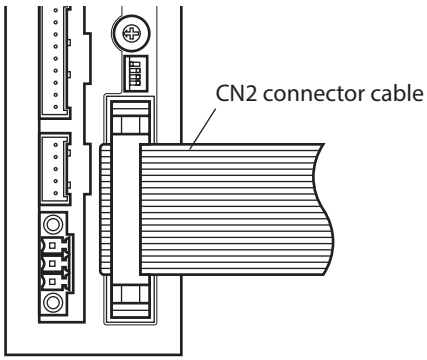

■ CN2 pin assignments

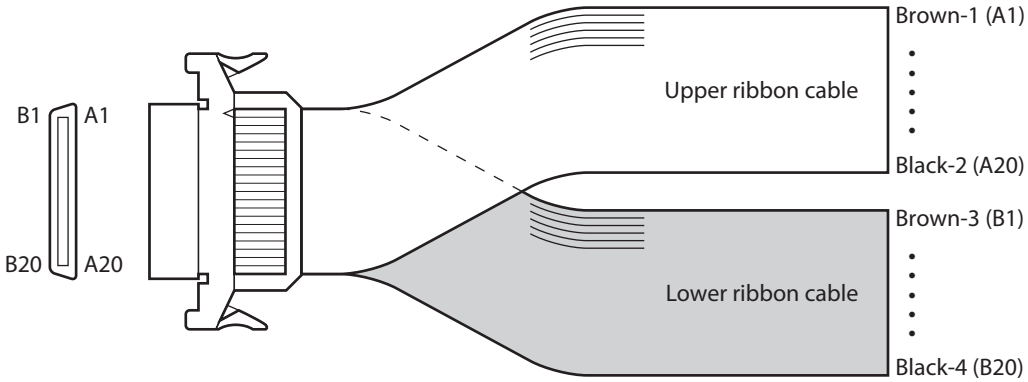

Lead wire color	Upper ribbon cable			Lead wire color	Lower ribbon cable		
	Pin No.	Signal name	Description		Pin No.	Signal name	Description
Brown-1	A1	IN-COM0	Input common	Brown-3	B1	MOVE+	Motor moving output
Red-1	A2	START	Start input	Red-3	B2	MOVE–	
Orange-1	A3	ALM-RST	Alarm reset input	Orange-3	B3	ALM+	Alarm output
Yellow-1	A4	AWO	All windings off input	Yellow-3	B4	ALM–	
Green-1	A5	STOP	Stop input	Green-3	B5	OUT1+	Control output 1 (initial value: AREA) *
Blue-1	A6	M0	Data selection input	Blue-3	B6	OUT1–	
Purple-1	A7	M1		Purple-3	B7	OUT2+	Control output 2 (initial value: READY) *
Gray-1	A8	M2		Gray-3	B8	OUT2–	
White-1	A9	M3		White-3	B9	OUT3+	Control output 3 (initial value: WNG) *
Black-1	A10	M4		Black-3	B10	OUT3–	
Brown-2	A11	M5		Brown-4	B11	OUT4+	Control output 4 (initial value: HOME-P) *
Red-2	A12	HOME/ P-PRESET	Return-to-home/ Position preset input	Red-4	B12	OUT4–	
Orange-2	A13	FWD	Forward input	Orange-4	B13	N.C.	Not used
Yellow-2	A14	RVS	Reverse input	Yellow-4	B14	N.C.	Not used
Green-2	A15	+LS	+limit sensor input	Green-4	B15	PLS-OUT+	Pulse output (Line driver output)
Blue-2	A16	–LS	–limit sensor input	Blue-4	B16	PLS-OUT–	
Purple-2	A17	HOMES	Mechanical home sensor input	Purple-4	B17	DIR-OUT+	Direction output (Line driver output)
Gray-2	A18	SLIT	Slit sensor input	Gray-4	B18	DIR-OUT–	
White-2	A19	N.C.	Not used	White-4	B19	GND	GND
Black-2	A20	IN-COM1	Sensor input common	Black-4	B20	N.C.	Not used

* These settings can be changed using the "OUT1 signal mode selection" to "OUT4 signal mode selection" parameters.

■ Connecting to a current sink output circuit

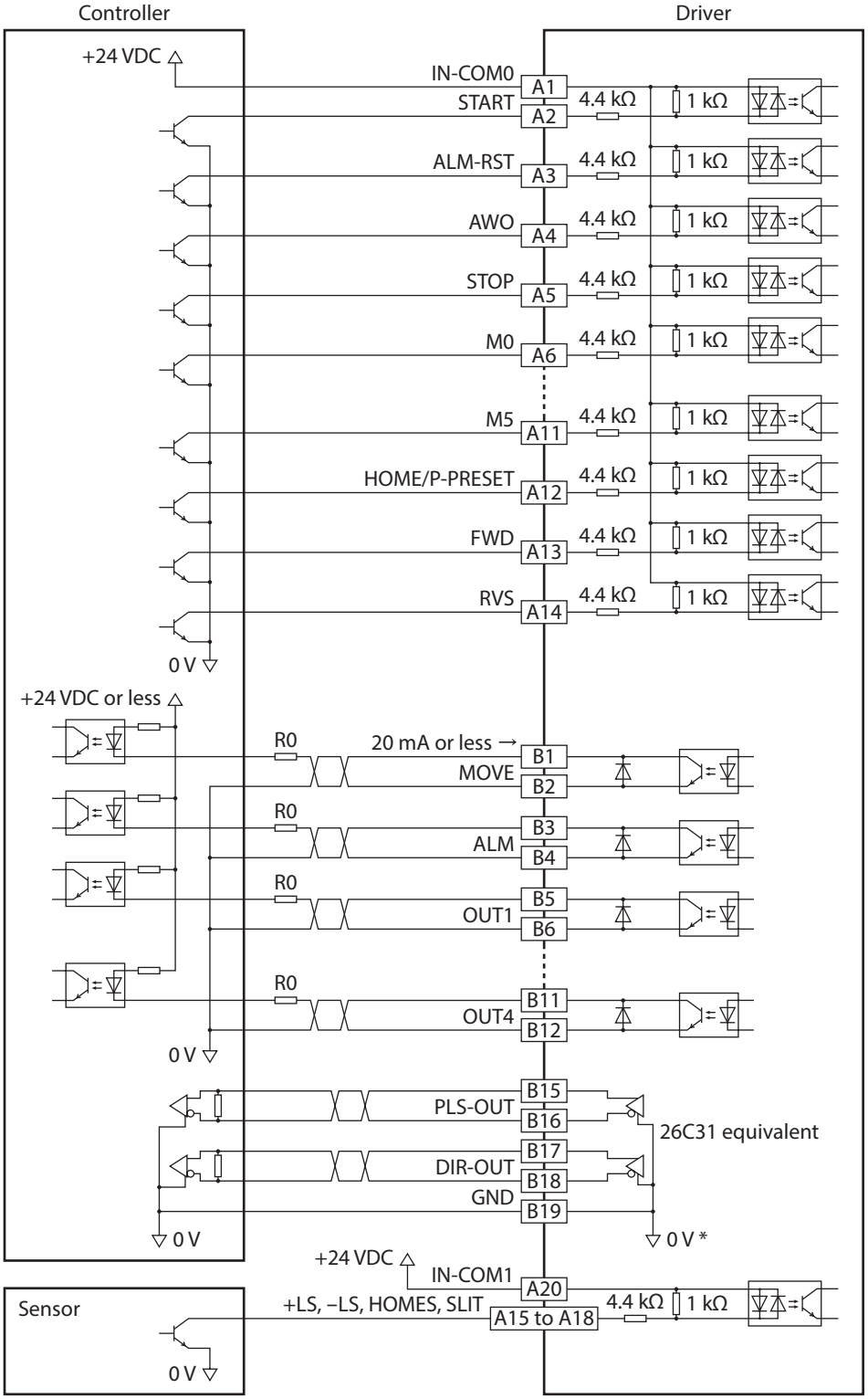

* The GND line is used in common with CN1 (not insulated).

Note

- Use input signals at 24 VDC.
- Use output signals at 24 VDC 20 mA or less. If the current exceeds 20 mA, connect an external resistor R0.
- The PLS-OUT output and DIR-OUT output are line driver outputs. When connecting a line receiver, be sure to connect pin No.B19 on the driver to the GND on the line receiver, and connect a terminal resistor of 100 Ω or more between the driver and the input of the line receiver.

■ Connecting to a current source output circuit

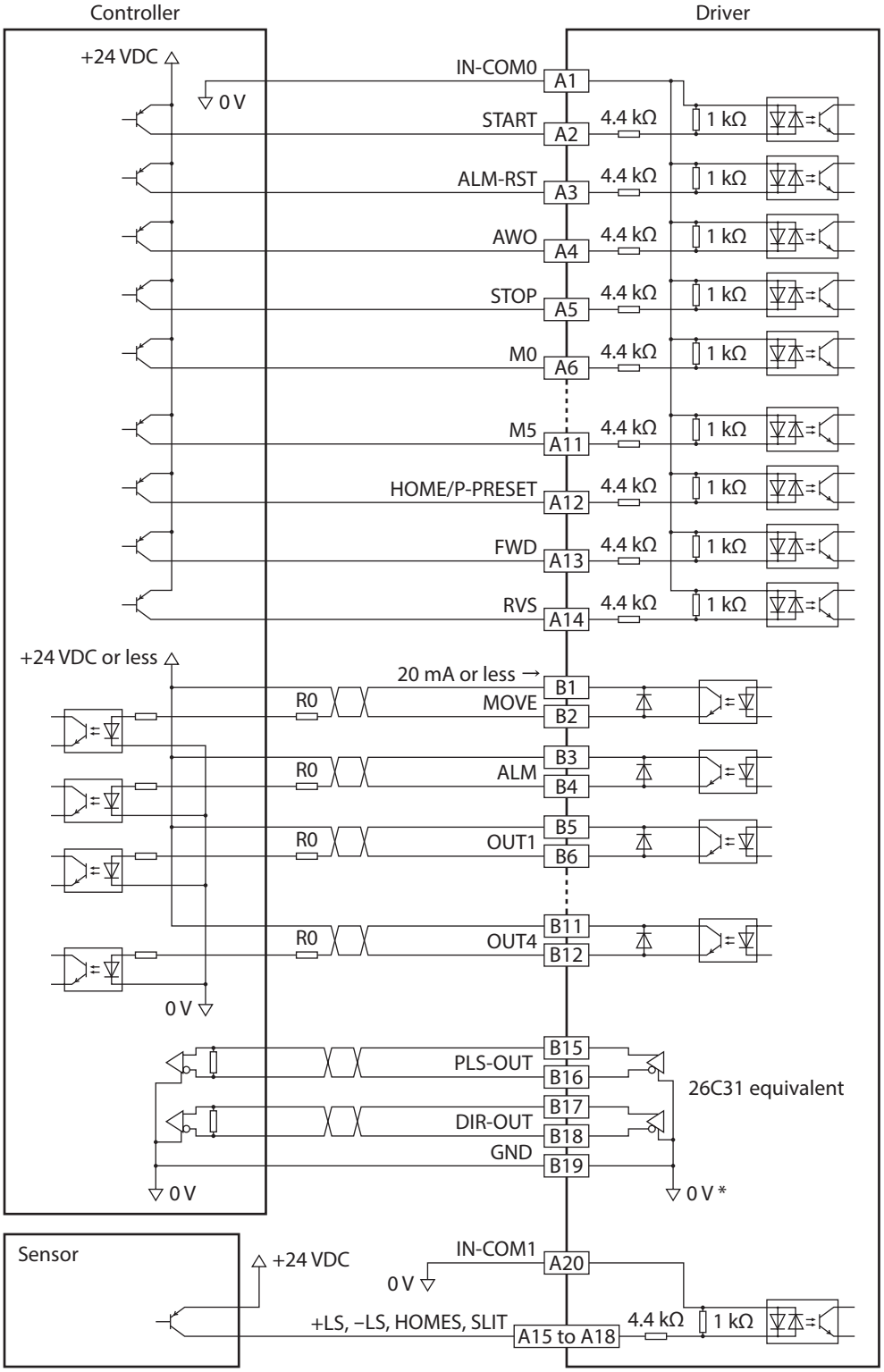

* The GND line is used in common with CN1 (not insulated).

Note

- Use input signals at 24 VDC.
- Use output signals at 24 VDC 20 mA or less. If the current exceeds 20 mA, connect an external resistor R0.
- The PLS-OUT output and DIR-OUT output are line driver outputs. When connecting a line receiver, be sure to connect pin No.B19 on the driver to the GND on the line receiver, and connect a terminal resistor of 100 Ω or more between the driver and the input of the line receiver.

2-6 Connecting the data setter

Connect the communication cable for the support software or **OPX-2A** cable to the data edit connector (CN3) on the driver.

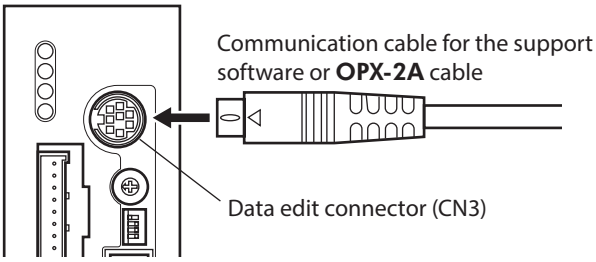

⚠CAUTION

The driver's power supply connector (CN1), I/O connector (CN2), data edit connector (CN3) and RS-485 communication connectors (CN6/CN7) are not electrically insulated. When grounding the positive terminal of the power supply, do not connect any equipment (PC, etc.) whose negative terminal is grounded. Doing so may cause the driver and PC to short, damaging both.

2-7 Connecting the encoder

The color of the lead wire for the motor varies depending on the motor frame size. Check the motor used before connecting.

■ □42 mm, □60mm

Connect the encoder lead wires to the encoder connector (CN5) on the driver using the CN5 connector lead wires (9 pins).
The CN5 connector lead wires (9 pins) is included with the motor with encoder and driver package.
When extending the lead wires, use shielded cable of AWG24 to 22 (0.2 to 0.3 mm^2).
Refer to p.89 for the detailed specification of this encoder.

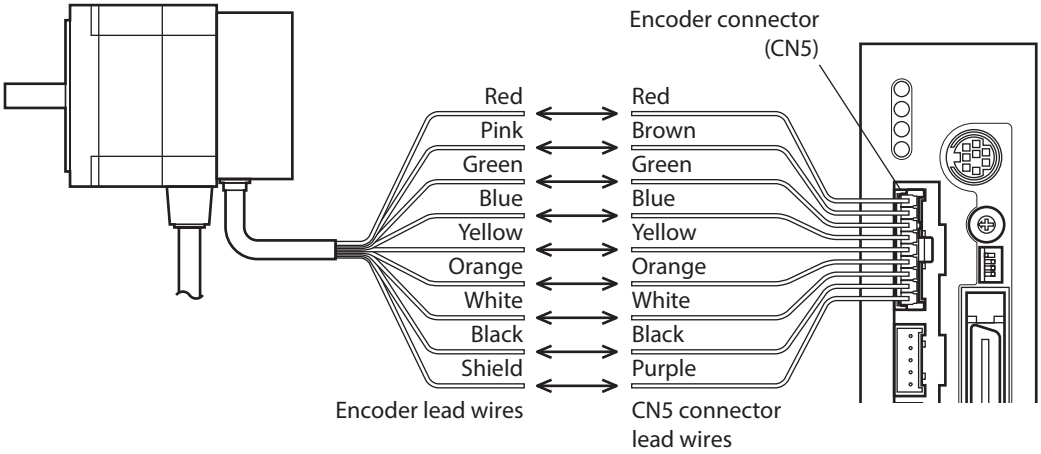

Note Keep 10 m (32.8 ft.) or less for the wiring distance between the motor and driver.

CN5 pin assignments

Pin No.	Signal name	Description	Connection destination
1	ENC-A+	Encoder input A-phase (Line receiver)	Red encoder lead
2	ENC-A–		Pink encoder lead
3	ENC-B+	Encoder input B-phase (Line receiver)	Green encoder lead
4	ENC-B–		Blue encoder lead
5	ENC-Z+	Encoder input Z-phase (Line receiver)	Yellow encoder lead
6	ENC-Z–		Orange encoder lead
7	+5 VDC OUT	+5 VDC power supply output for encoder	White encoder lead
8	GND	GND	Black encoder lead
9	SHIELD	Shield (Connect to GND)	Shield lead

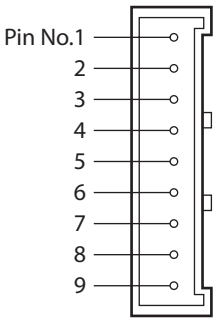

Composition of CN5 connector lead wires

There are two types of applicable connectors, and either one shown in the table is used.
Be sure to use a connector housing, contact, and designated crimp tool in the combinations shown in the table.
Manufacturer: Molex, LLC

	Applicable connector 1	Applicable connector 2
Connector housing	51103-0900	51163-0900
Contact	50351-8000	50752-8200
Designated crimp tool	57295-5000 or 63811-8100	200218-4900
Conductor size	AWG22 (0.3 mm^2)	

Internal circuit diagram

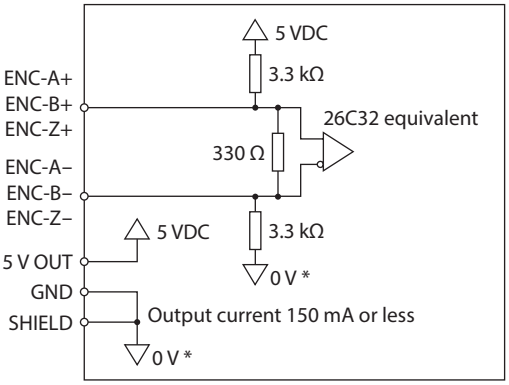

* The GND line is used in common with CN1 (not insulated).

Note The current consumption of the encoder power supply should be kept to 150 mA or less. When you are providing the encoder on your own, take note that if the encoder power consumption exceeds 150 mA, an encoder power supply must be provided externally to the system. In this case, be sure to use a common GND line for the encoder power supply and encoder connector (CN5).

■ □20 mm, □28mm

Connect with the included encoder connector lead wires.
When extending the lead wires, use a shielded cable of AWG24 to 22 (0.2 to 0.3 mm^2).
Refer to p.89 for the detailed specification of this encoder.

1. Insert the CN5 connector lead wires (9 pins) into the encoder connector (CN5) on the driver.
   A motor with encoder and driver package includes the CN5 connector lead wires (9 pins).
2. Connect the included encoder connector lead wires (8 pins) to the encoder.
3. Connect the CN5 connector lead wires and encoder connector lead wires.
   The customer must provide the terminal block, connectors and other items needed to interconnect the lead wires.

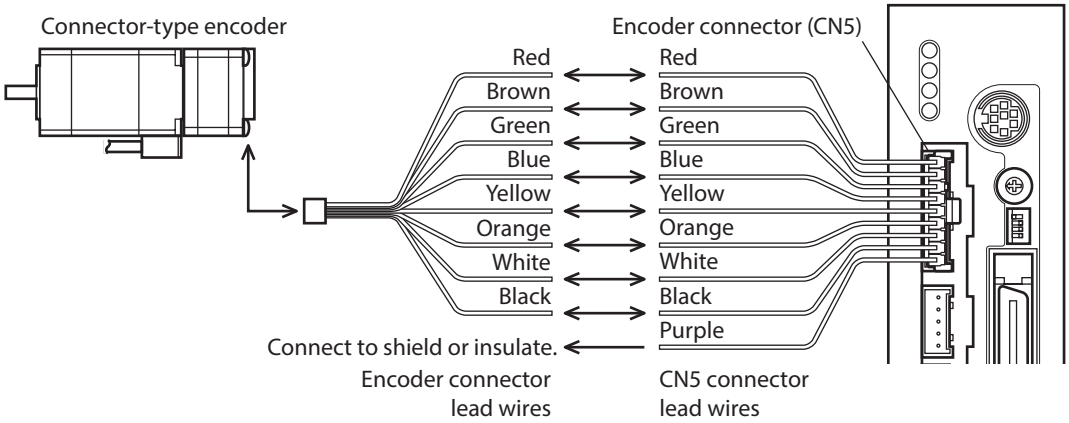

Note Keep 10 m (32.8 ft.) or less for the wiring distance between the motor and driver.

● Composition of encoder connector lead wires

Manufacturer: Molex, LLC

Connector housing	51021-0800
Contact	50079-8000
Designated crimp tool	63819-0300
Conductor size	AWG26 (0.14 mm^2)

● CN5 pin assignments and composition of CN5 connector lead wires

Refer to p.43.

2-8 Connecting the RS-485 communication cable

Connect this cable if you want to control your product via RS-485 communication.
Connect RS-485 communication cable to CN6 or CN7 on the driver. A vacant connector can be used to connect a different driver.
A cable for connecting the drivers is available in Oriental Motor products. See p.184.
You can also use a commercial LAN cable (shielded straight cable) to link drivers.

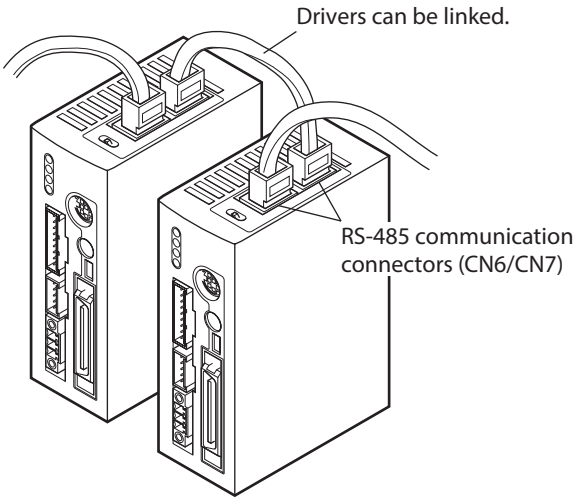

■ CN6/CN7 pin assignments

Pin No.	Signal name	Description
1	N.C.	Not used
2	GND	GND
3	TR+	RS-485 communication signal (+)
4	N.C.	Not used
5	N.C.	Not used
6	TR–	RS-485 communication signal (–)
7	N.C.	Not used
8	N.C.	Not used

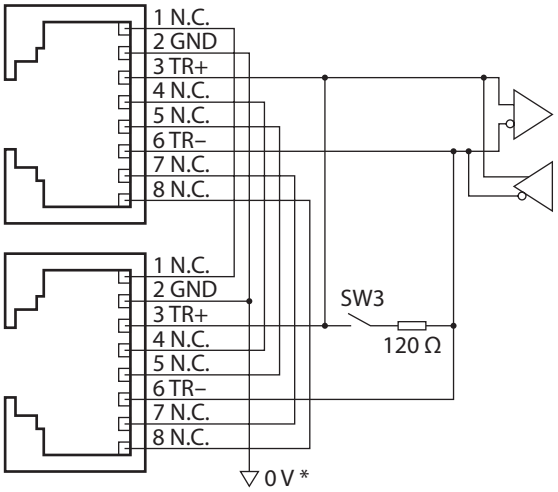

* The GND line is used in common with CN1 (not insulated).

3 Explanation of I/O signals

3-1 Input signals

Following input signals of the driver are photocoupler inputs. The signal state represents the "ON: Carrying current" or "OFF: Not carrying current" state of the internal photocoupler.

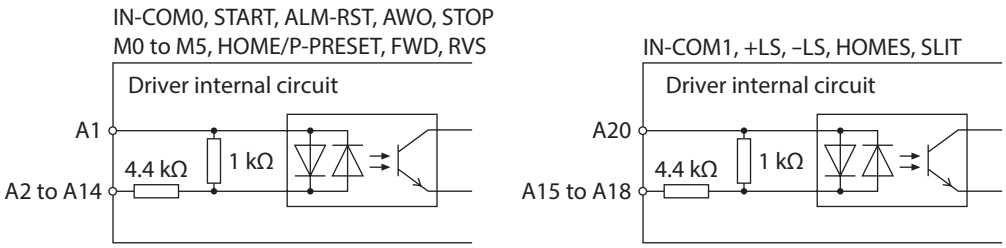

■ AWO input

This signal is used to cut off the motor current (factory setting: normally open).
When the AWO input is turned ON, the motor current will be cut off and the motor will lose its holding torque.
When the AWO input is turned OFF, current will be supplied to the motor and holding torque will be restored.
You can change the input logic using the "AWO contact configuration" parameter.

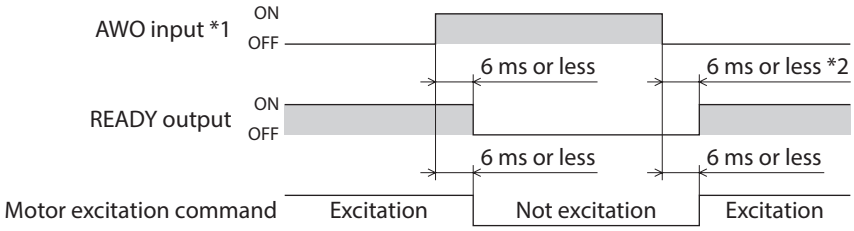

*1 When the AWO input logic is normally open.
*2 If the "Stepout detection" parameter is set to "enable," this period becomes 500 ms or less. If the parameter is set to "disable," the period becomes 6 ms or less.

■ START input

Turn the START input from OFF to ON to start positioning operation.

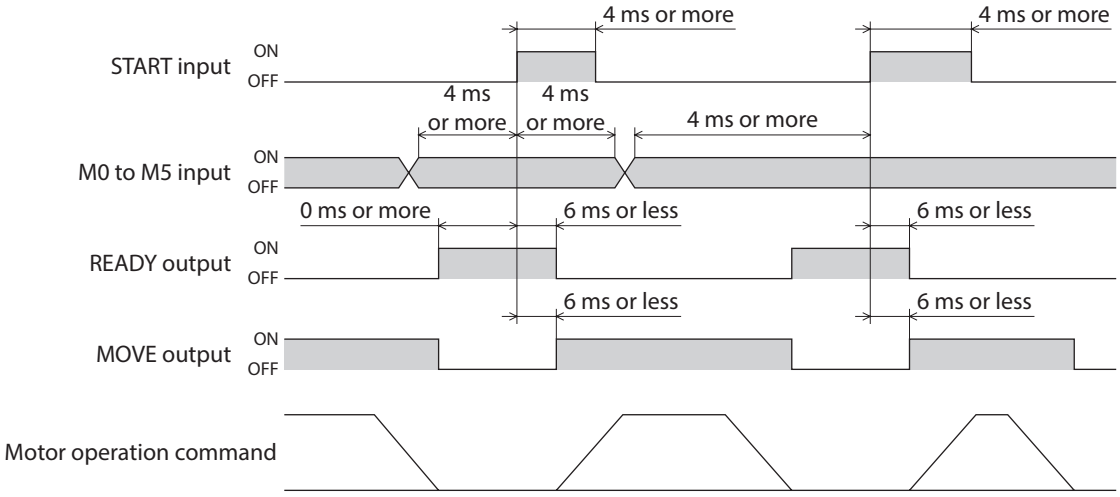

■ STOP input

The STOP input is used to stop the operating motor (factory setting: normally closed).
The STOP input turns OFF, the motor will stop. This input is normally closed, meaning that it is OFF when the power is turned on. You can set a desired stopping operation using the "STOP action" parameter.

Stop operation	Description
Immediate stop	The motor will stop immediately regardless of the specified deceleration rate.
Deceleration stop	The motor will stop according to the specified deceleration rate (initial value).
Immediate stop + motor is not excited	The motor will stop immediately regardless of the specified deceleration rate, after which the motor excitation will be turned off.
Deceleration stop + motor is not excited	The motor will stop according to the specified deceleration rate, after which the motor excitation will be turned off.

The deceleration rate that applies when the motor decelerates to a stop in positioning operation or continuous operation can be set as follows using the "Acceleration (deceleration) rate type" parameter:
Separate: The deceleration rate set under the applicable operation data number will be followed.
Common: The setting of the "Common deceleration rate" parameter will be followed.

Note If the STOP input is normally closed, be sure to turn this input ON when operating the motor.

● **When the STOP stopping method is immediate stop or deceleration stop.**

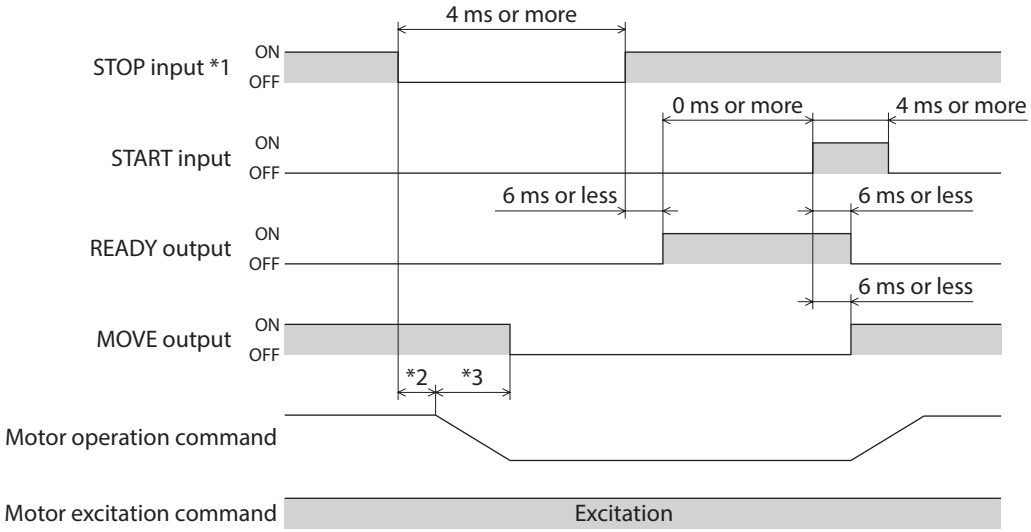

*1 When the STOP input logic is normally closed.
*2 The specific time varies depending on the command speed.
*3 The specific period varies depending on the setting of the "STOP action" parameter.

- **When the STOP stopping method is immediate stop + motor is not excited or deceleration stop + motor is not excited.**

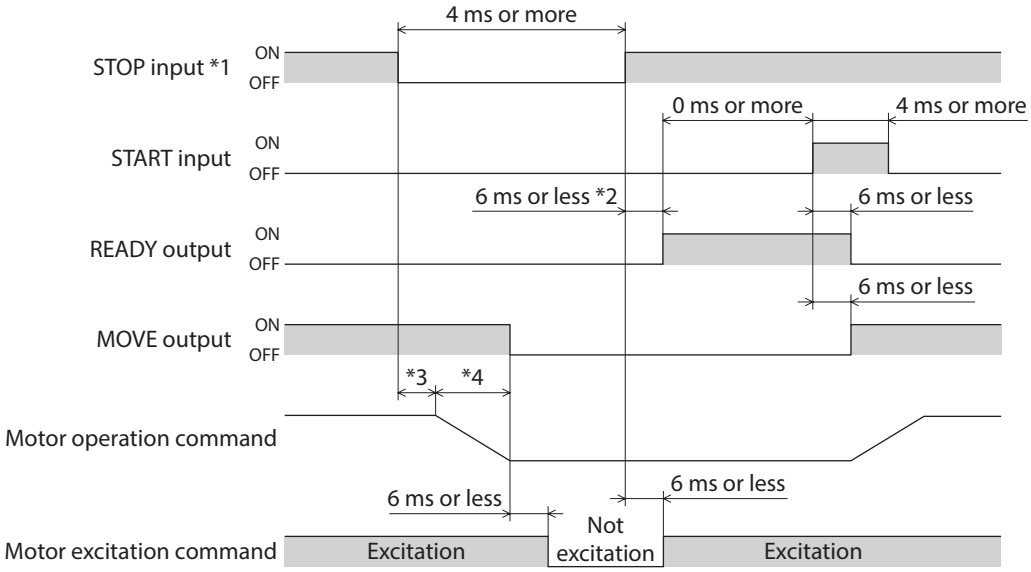

*1 When the STOP input logic is normally closed.
*2 If the "Stepout detection" parameter is set to "enable", this period becomes 500 ms or less. If the parameter is set to "disable", the period becomes 6 ms or less.
*3 The specific time varies depending on the command speed.
*4 The specific period varies depending on the setting of the "STOP action" parameter.

■ M0 to M5 input

Select a desired operation data number for positioning operation or continuous operation based on a combination of ON/OFF states of M0 to M5 inputs.
The ON/OFF status should be held until an operation based on the selected operation data No. is executed.

Operation data No.	M5	M4	M3	M2	M1	M0	Operation data No.	M5	M4	M3	M2	M1	M0
Sequential operation	OFF	OFF	OFF	OFF	OFF	OFF	22	OFF	ON	OFF	ON	ON	OFF
1	OFF	OFF	OFF	OFF	OFF	ON	23	OFF	ON	OFF	ON	ON	ON
2	OFF	OFF	OFF	OFF	ON	OFF	24	OFF	ON	ON	OFF	OFF	OFF
3	OFF	OFF	OFF	OFF	ON	ON	25	OFF	ON	ON	OFF	OFF	ON
4	OFF	OFF	OFF	ON	OFF	OFF	26	OFF	ON	ON	OFF	ON	OFF
5	OFF	OFF	OFF	ON	OFF	ON	27	OFF	ON	ON	OFF	ON	ON
6	OFF	OFF	OFF	ON	ON	OFF	28	OFF	ON	ON	ON	OFF	OFF
7	OFF	OFF	OFF	ON	ON	ON	29	OFF	ON	ON	ON	OFF	ON
8	OFF	OFF	ON	OFF	OFF	OFF	30	OFF	ON	ON	ON	ON	OFF
9	OFF	OFF	ON	OFF	OFF	ON	31	OFF	ON	ON	ON	ON	ON
10	OFF	OFF	ON	OFF	ON	OFF	32	ON	OFF	OFF	OFF	OFF	OFF
11	OFF	OFF	ON	OFF	ON	ON	33	ON	OFF	OFF	OFF	OFF	ON
12	OFF	OFF	ON	ON	OFF	OFF	34	ON	OFF	OFF	OFF	ON	OFF
13	OFF	OFF	ON	ON	OFF	ON	35	ON	OFF	OFF	OFF	ON	ON
14	OFF	OFF	ON	ON	ON	OFF	36	ON	OFF	OFF	ON	OFF	OFF
15	OFF	OFF	ON	ON	ON	ON	37	ON	OFF	OFF	ON	OFF	ON
16	OFF	ON	OFF	OFF	OFF	OFF	38	ON	OFF	OFF	ON	ON	OFF
17	OFF	ON	OFF	OFF	OFF	ON	39	ON	OFF	OFF	ON	ON	ON
18	OFF	ON	OFF	OFF	ON	OFF	40	ON	OFF	ON	OFF	OFF	OFF
19	OFF	ON	OFF	OFF	ON	ON	41	ON	OFF	ON	OFF	OFF	ON
20	OFF	ON	OFF	ON	OFF	OFF	42	ON	OFF	ON	OFF	ON	OFF
21	OFF	ON	OFF	ON	OFF	ON	43	ON	OFF	ON	OFF	ON	ON

Operation data No.	M5	M4	M3	M2	M1	M0	Operation data No.	M5	M4	M3	M2	M1	M0
44	ON	OFF	ON	ON	OFF	OFF	54	ON	ON	OFF	ON	ON	OFF
45	ON	OFF	ON	ON	OFF	ON	55	ON	ON	OFF	ON	ON	ON
46	ON	OFF	ON	ON	ON	OFF	56	ON	ON	ON	OFF	OFF	OFF
47	ON	OFF	ON	ON	ON	ON	57	ON	ON	ON	OFF	OFF	ON
48	ON	ON	OFF	OFF	OFF	OFF	58	ON	ON	ON	OFF	ON	OFF
49	ON	ON	OFF	OFF	OFF	ON	59	ON	ON	ON	OFF	ON	ON
50	ON	ON	OFF	OFF	ON	OFF	60	ON	ON	ON	ON	OFF	OFF
51	ON	ON	OFF	OFF	ON	ON	61	ON	ON	ON	ON	OFF	ON
52	ON	ON	OFF	ON	OFF	OFF	62	ON	ON	ON	ON	ON	OFF
53	ON	ON	OFF	ON	OFF	ON	63	ON	ON	ON	ON	ON	ON

■ FWD input, RVS input

When the FWD input turns ON, the motor will perform continuous operation in the + direction.
When the RVS input turns ON, the motor will perform continuous operation in the – direction.
The FWD input and RVS input are operated at the operating speed of the selected operation No.
If the FWD input and RVS input are both ON simultaneously, the motor decelerates to a stop.
When the operation data number is changed during continuous operation, the speed will change to the one specified for the new operation data number.

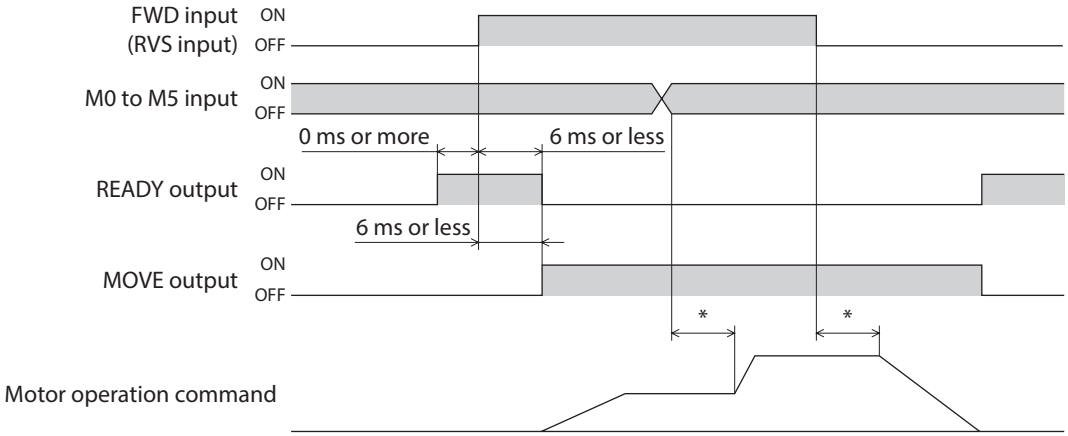

* The specific time varies depending on the command speed.

■ HOME/P-PRESET input

Factory setting is HOME input. Switch between HOME input and P-PRESET input using the "HOME/P-PRESET input switching" parameter.

● HOME input

The return-to-home operation starts when the HOME input turns ON.

Example: Return-to-home operation in the 3-sensor mode

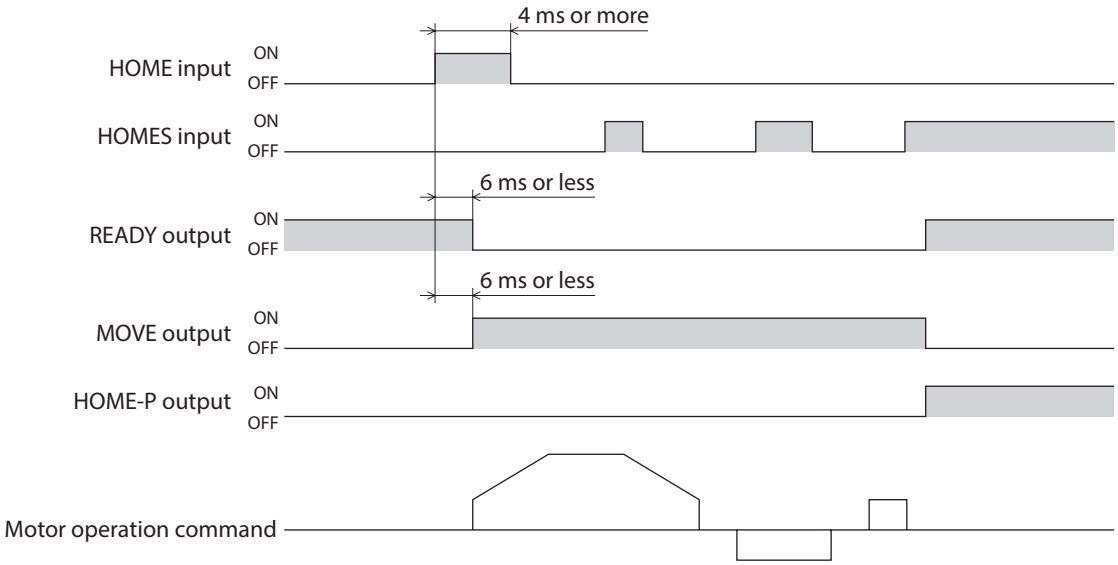

● P-PRESET input

When the P-PRESET input is turned ON, the value in the "Preset position" parameter will be overwritten by the command position.

Note Perform the preset operation while the motor is stopped.

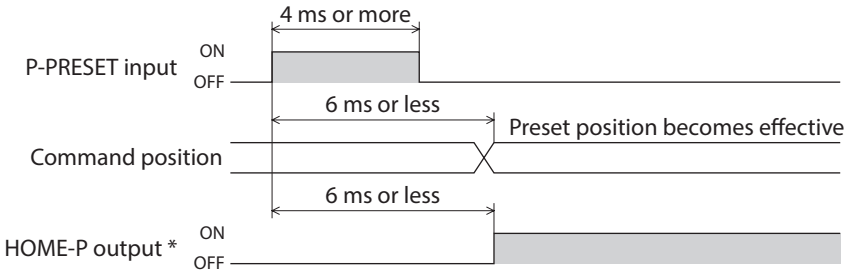

* When the "Preset position" parameter is set to "0."

■ ALM-RST input

When an alarm generates, the ALM output will turn OFF and motor will stop. When the ALM-RST input is turned from ON to OFF, the ALM output will turn ON and the alarm will be reset. (The alarm will be reset at the OFF edge of the ALM-RST input.) Always reset an alarm after removing the cause of the alarm and after ensuring safety.
For details, refer to "ALM output" on p.53, and "2-1 Alarms" on p.177.

Note Some alarms cannot be reset with the ALM-RST input. To reset these alarms, the power must be cycled.

● Resetting the alarm

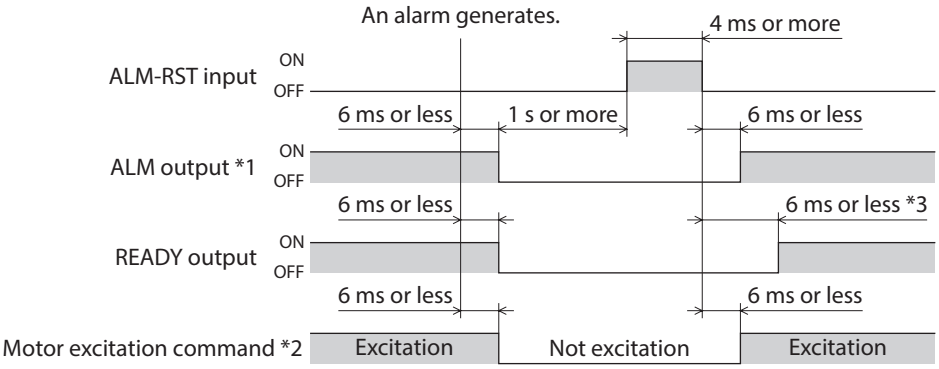

*1 The ALM output normally closed. This output remains ON in a normal state, and will turn OFF if an alarm generates.
*2 Assuming generation of an alarm that stops motor excitation.
*3 If the "Stepout detection" parameter is set to "enable," this period becomes 500 ms or less. If the parameter is set to "disable," the period becomes 6 ms or less.

● Limit sensor input (when the limit sensor is normally open)

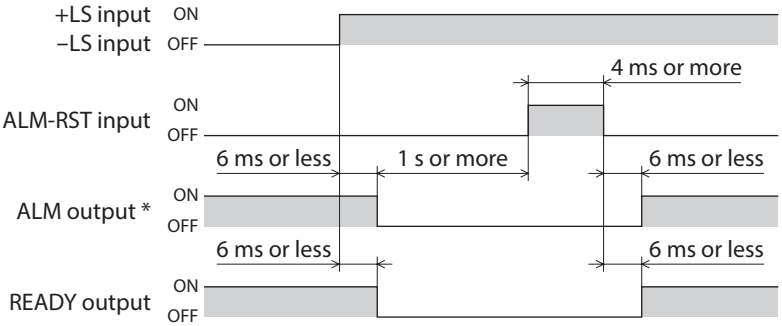

* The ALM output is normally closed. This output remains ON in a normal state, and will turn OFF if an alarm generates.

■ +LS input, −LS input

These signals are input from the applicable limit sensors.
They are used to detect the home during return-to-home operation. In any other operation, these signals are used to stop the motor.
You can switch the input logics for +LS input and −LS input using the "LS contact configuration" parameter.
Take note, however, that only the same input logics can be set for both signals.
See p.72 for details on the return-to-home operation.

Note If the +LS and −LS inputs are to be used in an operation other than return-to-home, set the "Hardware overtravel detection" parameter to "enable."

■ HOMES input

These signals are input from the applicable HOME sensors.
This input detects the mechanical home position when a return-to-home operation is executed in the 3-sensor mode.
You can switch the input logic for HOMES input using the "HOMES contact configuration" parameter.
See p.72 for details on the return-to-home operation.

■ SLIT input

This signal is used to detect the home using a slit disc, etc.
When detecting the home, use of the SLIT input in addition to the HOMES input and ±LS inputs will increase the accuracy of home detection.
You can switch the input logic for SLIT input using the "SLIT contact configuration" parameter.

Note If the SLIT input is used, set the "SLIT detection with home-seeking" parameter to "enable."

■ IN-COM0 input

This is a common terminal for input signals.

■ IN-COM1 input

This is a common terminal for the sensors.

Note Use sensor input signals at 24 VDC±10%.

3-2 Output signals

The driver outputs signals in the photocoupler/open-collector output mode or line driver output mode.
The signal state represents the "ON: Carrying current" or "OFF: Not carrying current" state of the internal photocoupler.

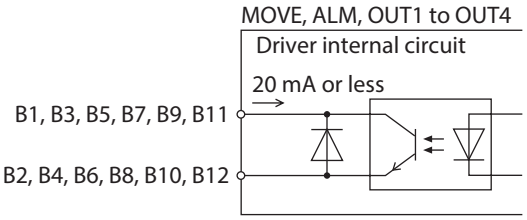

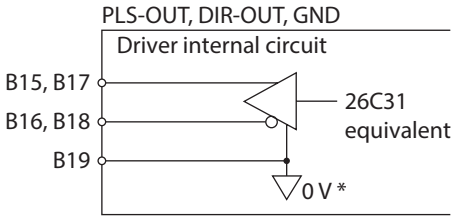

* The GND line is used in common with CN1 (not insulated).

■ MOVE output

The MOVE output becomes ON while operating the motor or return-to-home operation. Even when the current operation has completed, the next operation cannot be started while the MOVE output is ON.

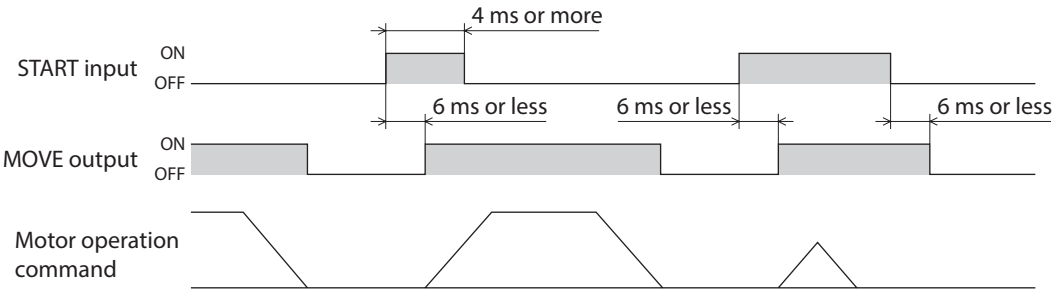

Note Even when positioning operation ends, the MOVE output will not turn OFF as long as the START input remains ON.

■ ALM output

The ALM output is normally closed.
When an alarm generates, the ALM output will turn OFF. At the same time, the ALARM LED of the driver will blink and the motor will stop.
Set the host controller so that it will stop motor operation commands upon detection of an OFF status of the ALM output. You can check the cause of the alarm by counting the number of times the ALARM LED blinks. For details, refer to p.178.

■ OUT1 to OUT4 output

The "OUT1 signal mode selection" to "OUT4 signal mode selection" parameters are used to set the desired functions to be assigned to the OUT1 to OUT4 outputs, respectively. The following output signals can be assigned:

- AREA output (area output): Default for OUT1 output
- TIM output (timing output)
- READY output (operation ready complete output): Default for OUT2 output
- WNG output (warning output): Default for OUT3 output
- HOME-P output (return-to-home ready complete output): Default for OUT4 output
- ZSG output (Z-phase pulse output)
- R-OUT1 output (remote output 1)
- R-OUT2 output (remote output 2)
- R-OUT3 output (remote output 3)
- R-OUT4 output (remote output 4)
- O.H. output (overheat output)
- STEPOUT output (misstep detection output)

■ AREA output

The AREA output can be assigned to a control output.
This signal will be output when the motor output shaft is inside the area set by the "Area 1" and "Area 2" parameters.
This signal is also output while the motor is stopped.

Note If the AREA output is to be used during operation, set the width of the area so that the AREA output will remain ON for at least 1 ms. If the AREA output remains ON for less than 1 ms, the AREA output may not actually turn ON.

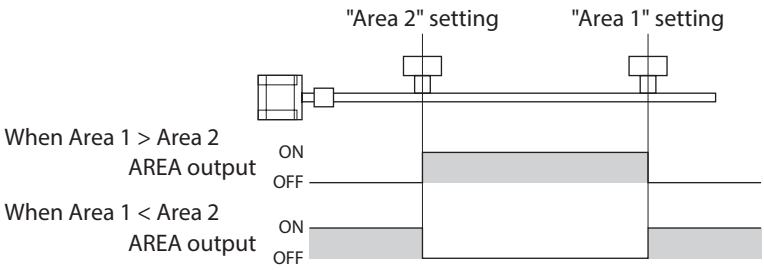

- When the area 1 boundary is greater in position coordinate than the area 2 boundary:
  The AREA output turns ON when the output shaft is positioned at or after the area 2 boundary or at or before the area 1 boundary.
- When the area 1 boundary is smaller in position coordinate than the area 2 boundary:
  The AREA output turns ON when the output shaft is positioned at or before the area 1 boundary or at or after the area 2 boundary.
- The area 1 is the same as the area 2 boundary:
  The AREA output turns ON only when the output shaft is at the specified position.

When the area 1 boundary is greater in position coordinate than the area 2 boundary

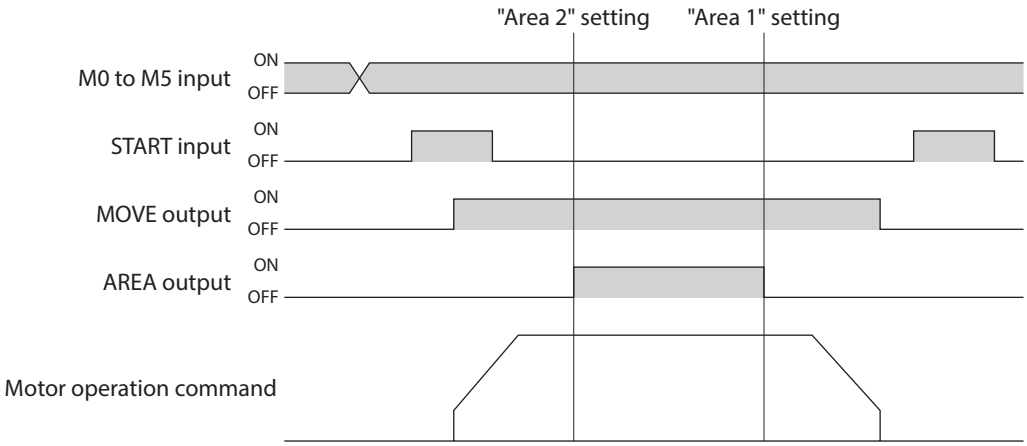

■ TIM output

The TIM output can be assigned to a control output.
This signal turns ON when the motor is at its excitation home.
If the base step angle of the motor is 0.72°, the TIM output will turn ON every time the motor moves by 7.2° from its excitation home in synchronization with the internal oscillation pulse.

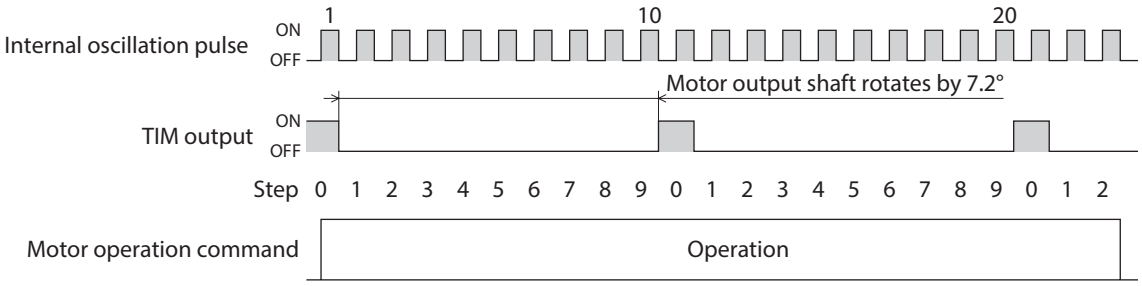

Motor type	Number of divisions		TIM output
	1	10	
Motor with 0.72°/step base step angle	0.72°	0.072°	every 7.2°
Motor with 0.36°/step base step angle	0.36°	0.036°	every 3.6°
Geared motor with 7.2 gear ratio	0.1°	0.01°	every 1°

Note

- The TIM output delays behind motor movement by up to 3 ms. The output may be used to verify the stop position of the motor.
- If the TIM output is to be used during operation, set the motor operating speed to 500 Hz or below. If the motor is operated at speeds faster than 500 Hz, this signal will not be output correctly.

■ READY output

The READY output can be assigned to a control output.
This signal will be output when the driver becomes ready. Start operation after the READY output has turned ON.
The READY output remains OFF in the following conditions:

- The motor is operating.
- An alarm is present.
- Any one of the FWD input, RVS input, HOME input and START input is ON.
- The AWO input is ON (normally open).
- The STOP input is OFF (normally closed).
- The system is performing test operation, downloading data or being initialized via the **MEXE02**.
- The system is operating in the test mode or copy mode via the **OPX-2A**.
- The motor is not excited.
- Immediately after the power was turned on.

■ WNG output

The WNG output can be assigned to control output.
This signal is output when a warning generates. However, the operation will continue.
The WNG output will turn OFF automatically once the cause of the warning is removed.

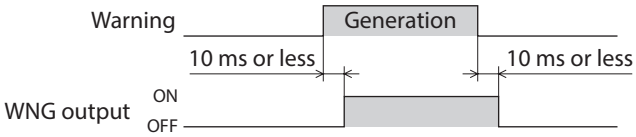

■ HOME-P output

The HOME-P output can be assigned to a control output.
This signal is output upon completion of return-to-home. It will turn ON when all of the following conditions are satisfied:

- The home is already set
- The command position has become 0
- The motor is stopped

The home can be set by the following methods:

- Successful completion of return-to-home operation
- Effecting the preset position
- Clearing the counter via RS-485 communication

The home will be cancelled when either of the following operations is performed:

- Cycle the power.
- Stop the motor excitation (when the "Stepout detection" parameter is set to "disable")

■ ZSG output

The ZSG output can be assigned to a control output.
This signal is used when an encoder is connected. The ZSG output signal is output when the ENC-Z input signal is input to the CN5 from the encoder.
Normally the ENC-Z input signal is input every time the motor output shaft turns one revolution.

Note

- The ZSG output signal will not be output correctly unless the ENC-Z input remains ON for at least 1 ms.
- The ZSG output delays behind motor movement by up to 3 ms. The output may be used to verify the stop position of the motor.

■ R-OUT1 to R-OUT4 output

These signals are general outputs. These signals are used when the system is controlled via RS-485 communication.
The figure shows a timing chart that assumes controls according to GW Protocol Version 1.

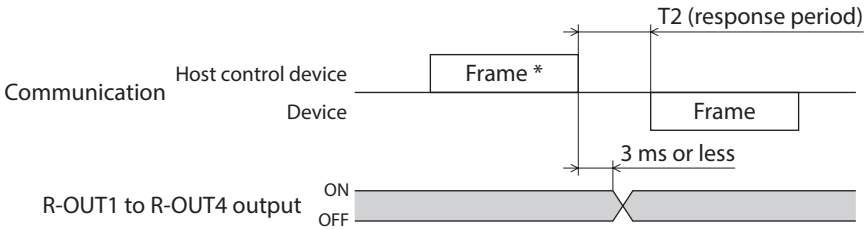

* Frame containing the "Remote output" command

■ O.H. output

The O.H. output can be assigned to a control output.
If an overheat warning generates, the O.H. output turns ON. The O.H. output will automatically turn OFF upon recovery from the warning condition.

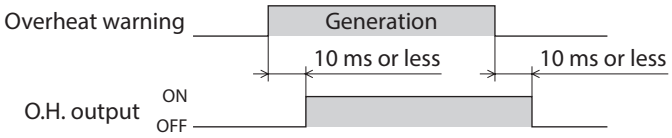

■ STEPOUT output

The STEPOUT output can be assigned to a control output.
This signal becomes effective when an encoder is connected, and a deviation error occurs.
This signal will be output when the deviation between the encoder counter value and driver command position reaches the value set in the "Stepout detection band" parameter. If the STEPOUT output is to be used, set the "Stepout detection" parameter to "enable." For misstep, refer to p.90.

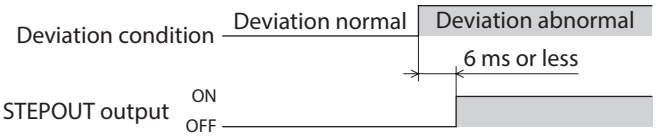

Note

- While the motor is not excited, the STEPOUT output is always OFF. The signal will become effective once the motor has remained excited for at least 500 ms.
- The STEPOUT output remains OFF during return-to-home operation.

■ PLS-OUT output, DIR-OUT output

The PLS-OUT output is used to output the driver's internal oscillation pulses. The number of pulses to be output corresponds to the commanded travel. The pulse frequency corresponds to the operating speed. The maximum output frequency is 500 kHz.
The DIR-OUT output is used to output the driver's internal direction command.

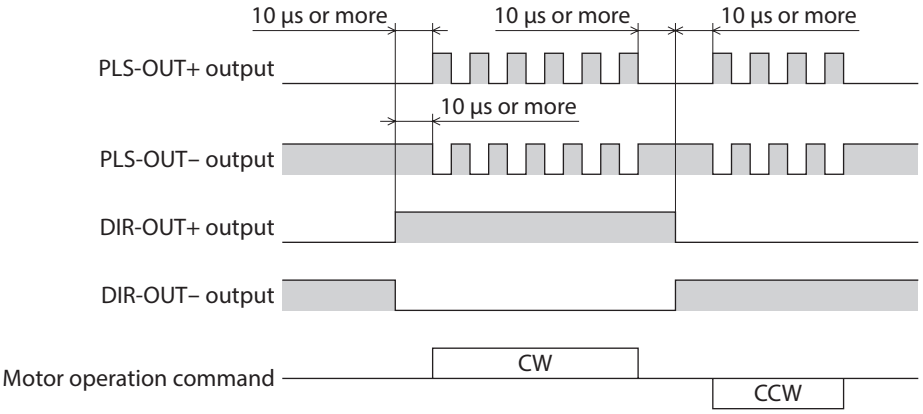

Note

The PLS-OUT output and DIR-OUT output are line driver outputs. When connecting to a line receiver, be sure to connect pin No. B19 of CN2 with the GND line of the line receiver. Also connect a terminal resistor of 100 Ω or more between the line receiver inputs.

● **Connect to line receiver**

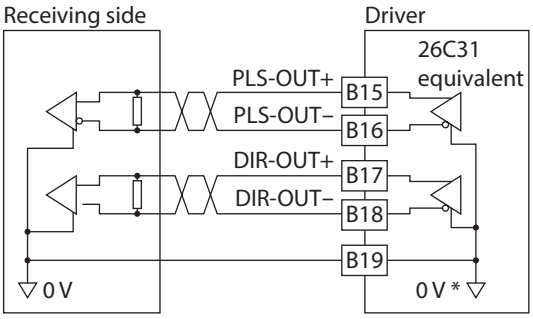

● **Connect to photocoupler**

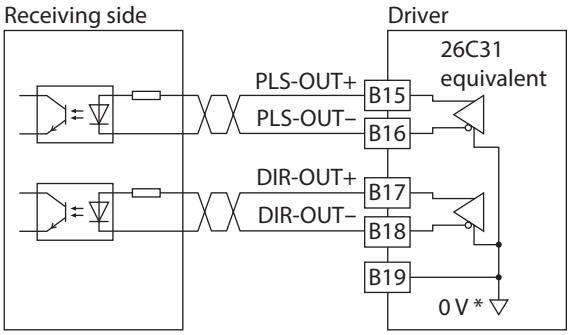

* The GND line is used in common with CN1 (not insulated)

3 Operation type and setting

This part explains the operation functions and the details of parameters.

◆Table of contents

1 Adjustment and setting 60

1-1 Step angle 60
1-2 Operating current 60
1-3 Standstill current 61
1-4 Acceleration/deceleration rate 61

2 Operation 62

2-1 Positioning operation 63
2-2 Return-to-home operation 72
2-3 Continuous operation 77
2-4 Other operation 80

3 Operation data 82

4 Parameter 83

4-1 Parameter list 83
4-2 I/O parameter 84
4-3 Motor parameter 85
4-4 Speed parameter 85
4-5 Return-to-home parameter 86
4-6 Alarm/warning parameter 86
4-7 Common parameter 87
4-8 Operation setting parameter 87
4-9 Communication parameter 88

5 Related functions 89

5-1 Position control 89
5-2 Encoder input 89
5-3 Misstep detection function 90

1 Adjustment and setting

This chapter explains how to adjust/set the motor and driver functions.

1-1 Step angle

Set the motor step angle using the "Motor step angle" parameter.

Related parameter

Parameter name	Description	Setting range	Initial value
Motor step angle	Sets the motor step angle.	0 to 15	0

- **Setting value of the "Motor step angle" parameter**

If the base step angle of the motor is 0.72°

Setting	Step angle	Number of divisions
0	0.72°	1
1	0.36°	2
2	0.288°	2.5
3	0.18°	4
4	0.144°	5
5	0.09°	8
6	0.072°	10
7	0.036°	20
8	0.0288°	25
9	0.018°	40
10	0.0144°	50
11	0.009°	80
12	0.0072°	100
13	0.00576°	125
14	0.0036°	200
15	0.00288°	250

If the base step angle of the motor is 0.36°

Setting	Step angle	Number of divisions
0	0.36°	1
1	0.18°	2
2	0.144°	2.5
3	0.09°	4
4	0.072°	5
5	0.045°	8
6	0.036°	10
7	0.018°	20
8	0.0144°	25
9	0.009°	40
10	0.0072°	50
11	0.0045°	80
12	0.0036°	100
13	0.0028°	125
14	0.0018°	200
15	0.00144°	250

Note
- Step angles are theoretical values.
- With the geared type, the value of "step angle/gear ratio" becomes the actual step angle.
- The base step angle is 0.36° for high-resolution type motors.

1-2 Operating current

Set the motor operating current using the "Operating current" parameter.
If the load is small and there is an ample allowance for torque, the motor temperature rise can be suppressed by setting a lower operating current.

Related parameter

Parameter name	Description	Setting range	Initial value
Operating current	Sets the motor operating current based on the rated current being 100%.	5 to 100%	100

Note
Excessively low operating current may cause a problem in starting the motor or holding the load in position. Do not lower the operating current more than necessary.

1-3 Standstill current

When the motor stops, the current cutback function will be actuated to lower the motor current to the standstill current. The standstill current is a value in which the set value of the "Standstill current" parameter is multiplied by the rated current (100%). The standstill current does not change even when the "Operating current" parameter has been changed.

Related parameter

Parameter name	Description	Setting range	Initial value
Standstill current	Sets the motor standstill current as a percentage of the rated current, based on the rated current being 100%.	5 to 50 %	50

1-4 Acceleration/deceleration rate

■ Acceleration/deceleration unit

Set the acceleration/deceleration in ms/kHz unit.

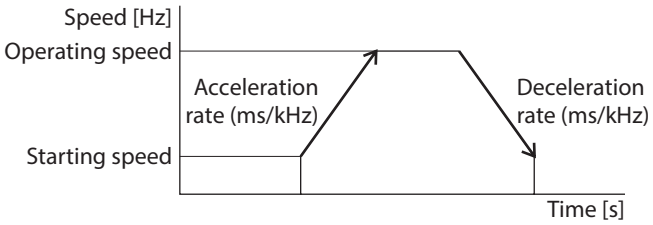

■ Common setting and separate setting of the acceleration/deceleration rate

The acceleration/deceleration for positioning operation or continuous operation can be set as follows using the "Acceleration/deceleration type" parameter:
Separate: The acceleration/deceleration rate set under the applicable operation data No. will be followed.
Common: The setting of the "Common acceleration" and "Common deceleration" parameter will be followed.

Note

- When performing linked operation, the acceleration/deceleration rate for the starting linked operation data No. is applied even when the "Acceleration/deceleration type" parameter is set to "separate."
- See p.79 for the acceleration/deceleration rate when performing variable speed operation.

Related parameters

Parameter name	Description	Setting range	Initial value
Acceleration/ deceleration type	Sets whether to use the common acceleration/ deceleration rate or the acceleration/deceleration rate specified for the operation data.	0: Common 1: Separate	0
Common acceleration rate	Sets the common acceleration rate in positioning operation and continuous operation.	0.001 to 1,000.000 ms/kHz	30.000
Common deceleration rate	Sets the common deceleration rate in positioning operation and continuous operation.		

2 Operation

This chapter explains the types of operation and timing charts.

Operation

[Setting by operation data and parameters]

Positioning operation

Operating function

• Single-motion operation

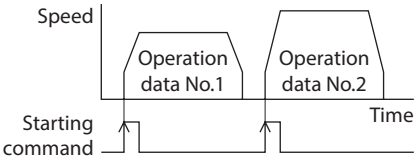

• Linked-motion operation 2

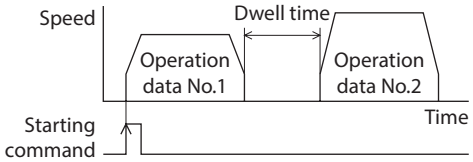

• Linked-motion operation

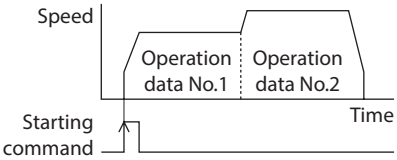

+

Starting method

• Data number selecting operation

• Sequential positioning operation

Return-to-home operation

• 3-sensor mode

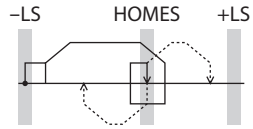

• 2-sensor mode

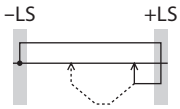

• Position preset

Continuous operation

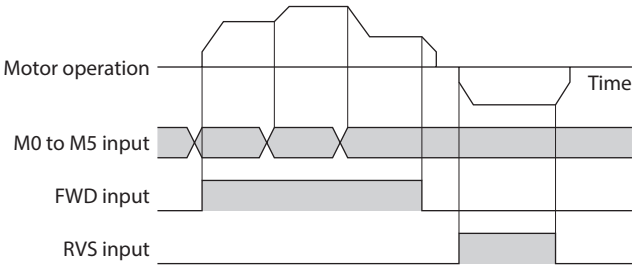

Other operations

• JOG operation

Function

[Setting by parameters]

• I/O
Input logic level
STOP input action
Overtravel action

• Motor function
Operating current
Standstill current

• Operation function
Acceleration/deceleration rate
JOG operation

• Alarm/warning
Misstep detection
Warning detection

• Return-to-home function
Return-to-home speed
Home position offset
Return-to-home starting direction
SLIT sensor, TIM signal detection

• Coordination setting
Step angle
Encoder electronic gear
Motor rotation direction

2-1 Positioning operation

Positioning operation is one in which motor operating speed, position (travel amount) and other items are set as operation data and then executed. When the positioning operation is executed, the motor begins at the starting speed and accelerates until the operating speed is reached. Then, once the operating speed is reached, that speed is maintained. The motor decelerates when the stopping position approaches, and finally comes to a stop.
The operation function can also be set in operation data. The operation function is how to operate consecutive operation data (example: operation data No.1, No.2, No.3).

■ Operation data

The following data are the operation data for positioning operation.

Name	Description	Setting range	Initial value
Position	Sets the position (distance) for positioning operation.	−8,388,608 to +8,388,607 step	0
Operating speed	Sets the operating speed in positioning operation and continuous operation.	1 to 500,000 Hz	1,000
Operation mode	Selects how to specify the position (travel amount) in positioning operation.	INC: Incremental ABS: Absolute	INC
Operation function	Selects how to operate consecutive operation data.	SnGL: Single-motion Lin1: Linked-motion Lin2: Linked-motion 2	SnGL
Sequential positioning	Sets whether to enable or disable sequential positioning operation.	0: Disable 1: Enable	0
Acceleration rate	Sets the acceleration rate or time in positioning operation and continuous operation.	0.001 to 1,000.000 ms/kHz	30.000
Deceleration rate	Sets the deceleration rate or time in positioning operation and continuous operation.		
Dwell time	Sets the dwell time to be used in linked-motion operation 2.	0 to 50.000 s	0

● Position, operating speed, acceleration, deceleration

The acceleration/deceleration for positioning operation can be set as follows using the "Acceleration/deceleration type" parameter:
Separate : The acceleration/deceleration rate set under the applicable operation data No. will be followed.
(Each 63 data for acceleration and deceleration)
Common: The setting of the "Common acceleration" and "Common deceleration" parameter will be followed.
(Each one data for acceleration and deceleration)

When the starting speed < operating speed

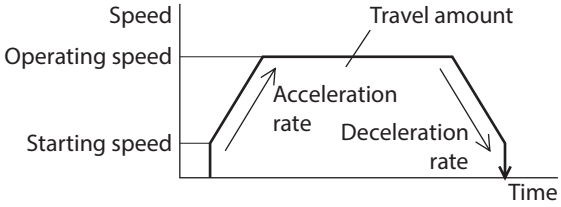

When the starting speed ≥ operating speed

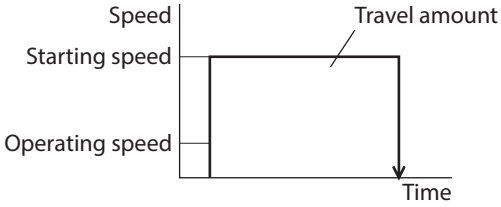

- **Operation modes**

The following two operation modes are available:

Absolute (ABS) mode

The position (distance) from home is set [Absolute positioning].

Example: When positioning operation is performed with setting the starting point to 1,000 and setting the destination to +3,000 and −3,000

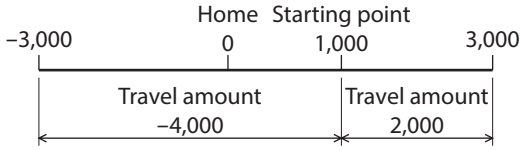

Incremental (INC) mode

Each motor destination becomes the starting point for the next movement. This mode is suitable when the same position (distance) is repeatedly used [Incremental positioning].

Example: When positioning operation is performed with setting the starting point to 1,000 and setting the destination to +3,000 and −3,000

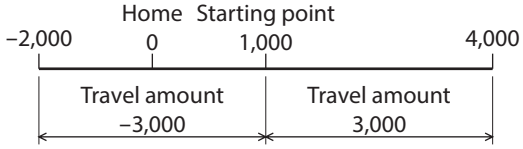

- **Operation function, dwell time**

The following three operation functions are available:

Name	Description	Ref.
Single-motion	A single operation data set is executed.	p.68
Linked-motion	Multiple sets of operation data are linked to perform multi-variable speed operation	p.69
Linked-motion 2	Dwell time (stop waiting time) can be set between operation data. Operation data whose rotation direction is different can also be linked.	p.70

■ Starting method of positioning operation

The following two types are available in the starting method.

Name	Description
Data number selecting operation	When the START input is turned ON with selecting the operation data No. by a combination of the M0 to M5 inputs, the positioning operation will perform.
Sequential positioning operation	Positioning operation is performed to the next operation data No. every time a START input signal is input.

- **Data number selecting operation**

Select an operation data based on a combination of ON/OFF status of the M0 to M5 inputs. See p.49 for details.
If all M0 to M5 inputs are turned OFF, sequential operation will be selected.

Operation data No.	M5	M4	M3	M2	M1	M0
Sequential operation	OFF	OFF	OFF	OFF	OFF	OFF
1	OFF	OFF	OFF	OFF	OFF	**ON**
2	OFF	OFF	OFF	OFF	**ON**	OFF
⋮	⋮	⋮	⋮	⋮	⋮	⋮
61	**ON**	**ON**	**ON**	**ON**	OFF	**ON**
62	**ON**	**ON**	**ON**	**ON**	**ON**	OFF
63	**ON**	**ON**	**ON**	**ON**	**ON**	**ON**

- **Operating method**
  1) Check the READY output is ON.
  2) Select the operation data No. by a combination of the M0 to M5 inputs and turn the START input ON.
  3) The motor starts positioning operation.
  4) Check that the READY output has been turned OFF and turn the START input OFF.
  5) When the positioning operation is completed, the READY output will be turned ON.

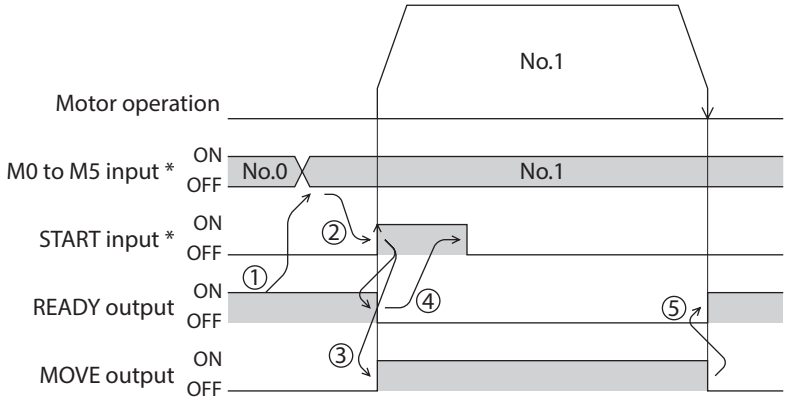

* When controlling the motor via network communication, operation is performed even if the M0 to M5 input and operation input are turned ON simultaneously.

- **Sequential positioning operation**

When the "sequential positioning" of the operation data is set to "Enable," positioning operation for the next operation data number is performed every time the START input turns ON. This function is useful when multiple positioning operations must be performed sequentially, because there is no need to select each data number by the M0 to M5 inputs.
When the "sequential positioning" of the operation data is executed up to the data number set to "Disable," the operation returns to the operation data No.1 and the sequential operation will start again.

Note Set the "sequential positioning" of the operation data No.1 to "Enable" without fail because the sequential operation starts from the operation data No.1.

When the operating pattern is one type

1) The positioning operation for the operation data No.1 is performed by turning the START input ON.
2) After the operation 1) is completed, when turning the START input ON again, the positioning operation for the operation data No.2 will be performed.
3) After the operation 2) is completed, when turning the START input ON again, the positioning operation for the operation data No.3 will be performed.
4) After the operation 3) is completed, when turning the START input ON again, the positioning operation will be performed by returning to the operation data No.1 because the sequential positioning for the operation data No.4 has been set to "disable."

• Setting example

Operation data	Sequential positioning
No.1	Enable
No.2	
No.3	
No.4	Disable

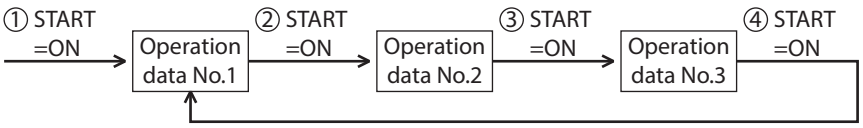

When the operating patterns are multiple

This section explains how to operate when performing the sequential positioning operation by the following operation data.

Operation data	Operation function	Sequential positioning
No.0	–	–
No.1	Single-motion	Enable
No.2	Linked-motion	Enable
No.3	Linked-motion	Enable
No.4	Single-motion	Enable
No.5	Single-motion	Disable
No.11	Single-motion	Enable
No.12	Single-motion	Enable
No.13	Single-motion	Disable

An example when executing the operation data No.0 first

1) When selecting the data No.0 and turning the START input ON, a single operation for the data No.1 is performed.
2) After the operation 1) is completed, when turning the START input ON again, the linked-motion operation for the operation data No.2 to No.4 will be performed.
3) After the operation 2) is completed, when turning the START input ON again, a single operation for the operation data No.1 will be performed by returning to the operation data No.1 because the "sequential positioning" for the operation data No.5 has been set to "Disable."

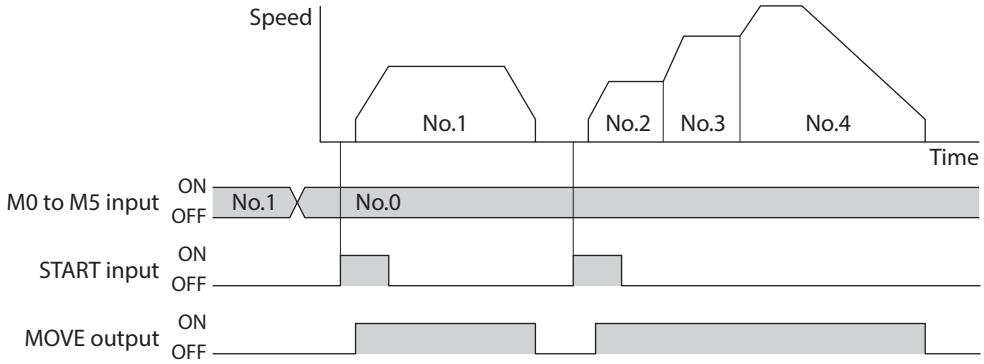

Note When performing the sequential positioning operation for the operation data which "operation function" is set to "Linked-motion" or "Linked-motion 2," set the "sequential positioning" to "Enable."

An example when executing the operation No.0 after executing the operation data No.11

1) When selecting the data No.11 and turning the START input ON, a single operation for the data No.11 is performed.
2) After the operation 1) is completed, when selecting the data No.0 and turning the START input ON, a single operation for the operation data No.12 will be performed.
3) After the operation 2) is completed, when turning the START input ON again, a single operation for the operation data No.1 will be performed by returning to the operation data No.1 because the "sequential positioning" for the operation data No.13 has been set to "Disable."

An example when the "sequential positioning" for the operation data No.1 is set to "Disable"

When selecting the data No.0 and turning the START input ON while the "sequential positioning" for the operation data No.1 is set to "Disable," an operation data error alarm will generate.

An example when executing the data No.0 after executing the data No.11 and No.12 while the "sequential positioning" for the operation data No.1 is set to "Disable"

An operation data error alarm will generate.

Note The operation data will return to the data No.1.
- When performing return-to-home operation
- When presetting the command position
- When turning the STOP input OFF
- When performing continuous operation
- When turning the AWO input ON (factory setting: normally open)
- When resetting an alarm after it was generated
- When performing teaching function or JOG operation using the **MEXE02** or **OPX-2A**

Operating method

1) Check the READY output is ON.
2) Turn the START input ON.
3) The motor starts positioning operation.
4) Check that the READY output has been turned OFF and turn the START input OFF.
5) When the positioning operation is completed, the READY output will be turned ON.

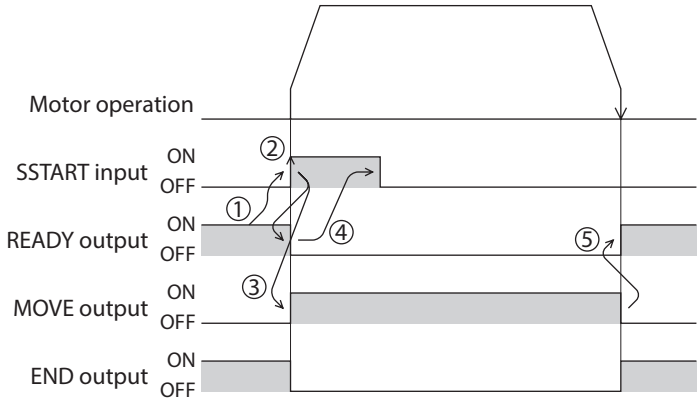

● Stop the positioning operation

When the STOP input is turned ON, the current positioning operation stops. (Factory setting: normally closed)

Absolute mode

In the absolute mode, the absolute position (distance) is set with reference to the home position. If the operation is resumed after stopping the motor on the way, it will move to the specified position.

Incremental mode

The incremental mode, the destination of each movement (current position) becomes the starting point of the next movement. If the operation is stopped on the way, the stopped position (current position) will become the starting point of the next operation.

■ Operation function

● Single-motion

The positioning operation is performed only once using a single operation data set.

Example of single-motion operation

Operation data	Position	Operating speed	Acceleration	Deceleration	Operation mode	Operation function	Dwell time	Sequential positioning
No.1	5,000	5,000	30,000	30,000	INC	Single-motion	Not used	Not used

Operation example

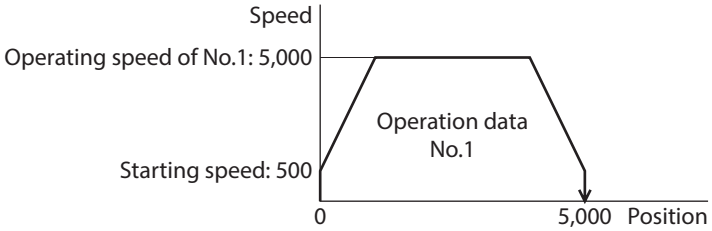

Operating method

1) Check the READY output is ON.
2) Select the operation data No.1 by turning the M0 input ON, and turn the START input ON.
3) The motor starts positioning operation of the operation data No.1.
4) Check that the READY output has been turned OFF and turn the START input OFF.
5) When the positioning operation is completed, the READY output will be turned ON.

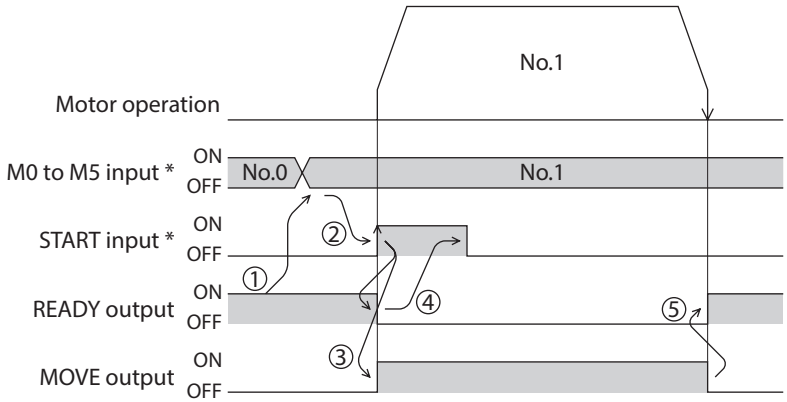

* When controlling the motor via network communication, operation is performed even if the M0 to M5 input and operation input are turned ON simultaneously.

Linked-motion operation

When the "operation function" is set to "linked-motion" using operation data, positioning operation based on the next data number will be performed without stopping the motor.
If operation data includes data for which "single-motion" is set, the motor will stop after the positioning with respect to the "single" operation data is completed.
A maximum of four operation data can be linked. Note that only operation data of the same direction can be linked.

Note

- Multiple operation data of different directions cannot be linked. An operation data error alarm will generate during operation.
- Up to four sets of operation data can be linked. When combining the linked-motion operation and the linked-motion operation 2, make sure the total number of linked operation data sets does not exceed four. When linked-motion operation is performed with five or more sets of operation data linked together, an operation data error alarm will generate upon start of operation.
- No.1 will not be linked even when "linked-motion" is set for data No.63, because the operation pertaining to No.63 will be processed independently.
- The acceleration/deceleration in linked-motion operation corresponds to the acceleration/deceleration specified for the operation data No. with which the linked-motion operation is started.

Example of linked-motion operation

Operation data	Position	Operating speed	Acceleration	Deceleration	Operation mode	Operation function	Dwell time	Sequential positioning
No.1	5,000	5,000	30,000	30,000	INC	Linked-motion	Not used	Not used
No.2	20,000	10,000	Not used	Not used	INC	Single-motion	Not used	Not used

Operation example

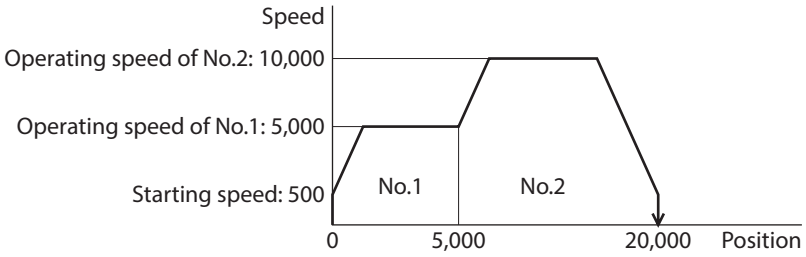

Operating method

1) Check the READY output is ON.
2) Select the operation data No.1 by turning the M0 input ON and turn the START input ON.
3) The motor starts the positioning operation in which the operation data No.1 and No.2 are linked.
4) Check that the READY output has been turned OFF and turn the START input OFF.
5) When the positioning operation is completed, the READY output will be turned ON.

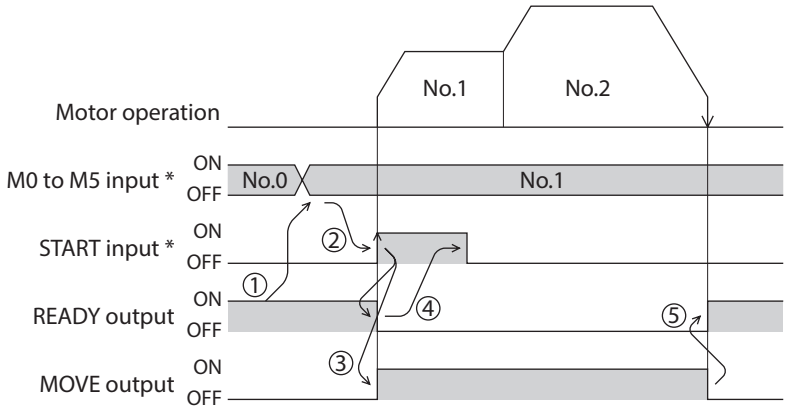

* When controlling the motor via network communication, operation is performed even if the M0 to M5 input and operation input are turned ON simultaneously.

Linked-motion operation 2

By setting the "operation function" of operation data to "Linked-motion 2," an operation data whose rotation direction is different can be linked. In this case, the system stops for the dwell time after each positioning operation, and then performs operation according to the next operation data. If operation data includes data for which "single-motion" is set, the motor will stop after the positioning with respect to the "single" operation data is completed.

Note

- Up to four sets of operation data can be linked. When combining the linked-motion operation and the linked-motion operation 2, make sure the total number of linked operation data sets does not exceed four. When linked-motion operation is performed with five or more sets of operation data linked together, an operation data error alarm will generate upon start of operation.
- No.1 will not be linked even when "linked-motion 2" is set for data No.63, because the operation pertaining to No.63 will be processed independently.

Example of linked-motion operation 2

Operation data	Position	Operating speed	Acceleration	Deceleration	Operation mode	Operation function	Dwell time	Sequential positioning
No.1	5,000	5,000	30,000	30,000	INC	Linked-motion 2	1,000	Not used
No.2	–3,000	3,000	30,000	30,000	INC	Single-motion	0	Not used

Operation example

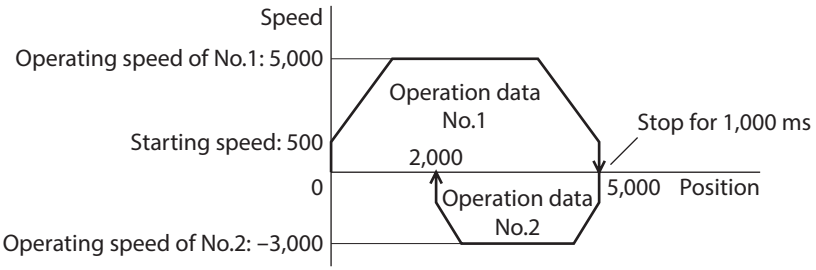

Operating method

1) Check the READY output is ON.
2) Select the operation data No.1 by turning the M0 input ON and turn the START input ON.
3) The motor starts the positioning operation for the operation data No.1.
4) Check that the READY output has been turned OFF and turn the START input OFF.
5) When the positioning operation 3) is completed, the MOVE output will be turned OFF.
6) When the dwell time has passed, the positioning operation for the operation data No.2 will automatically start. At the same time, the MOVE output will be turned ON.
7) When the positioning operation for the operation data No.2 is completed, the READY output will be turned ON.

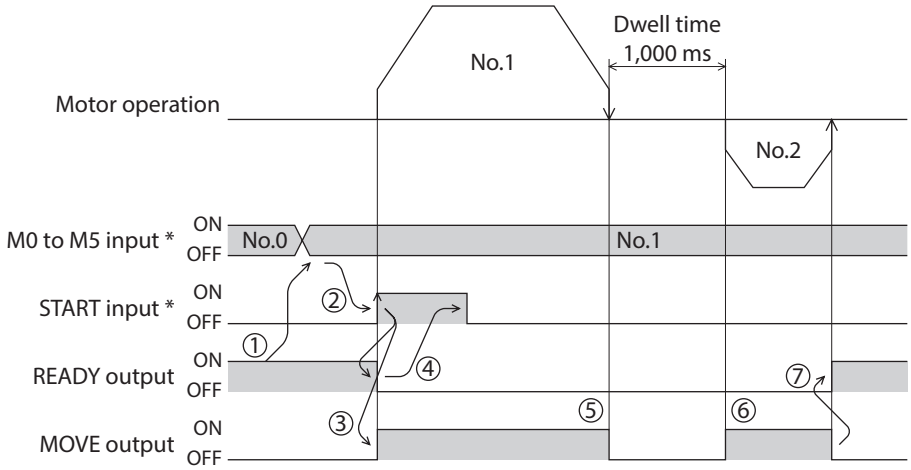

* When controlling the motor via network communication, operation is performed even if the M0 to M5 input and operation input are turned ON simultaneously.

Example of linked-motion operation 2:
When combining the linked-motion operation and the linked-motion operation 2

Operation data	Position	Operating speed	Acceleration	Deceleration	Operation mode	Operation function	Dwell time	Sequential positioning
No.1	5,000	3,000	30,000	30,000	INC	Linked-motion	Not used	Not used
No.2	10,000	5,000	Not used	Not used	INC	Linked-motion	Not used	Not used
No.3	25,000	7,000	Not used	Not used	INC	Linked-motion 2	1,000	Not used
No.4	0	7,000	30,000	30,000	ABS	Single-motion	Not used	Not used

Operation example

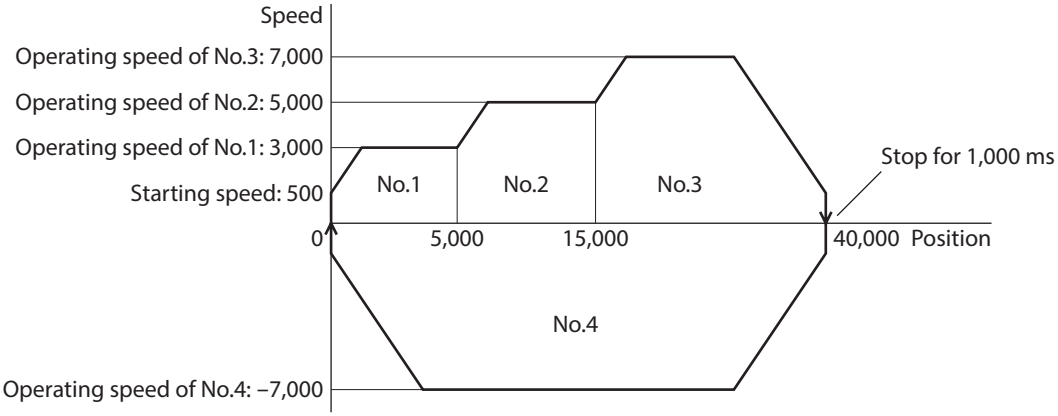

Operating method

1) Check the READY output is ON.
2) Select the operation data No.1 by turning the M0 input ON and turn the START input ON.
3) The motor starts the positioning operation in which the operation data from No.1 to No.3 are linked.
4) Check that the READY output has been turned OFF and turn the START input OFF.
5) When the positioning operation 3) is completed, the MOVE output will be turned OFF.
6) When the dwell time has passed, the positioning operation for the operation data No.4 will automatically start. At the same time, the MOVE output will be turned ON.
7) When the positioning operation for the operation data No.4 is completed, the READY output will be turned ON.

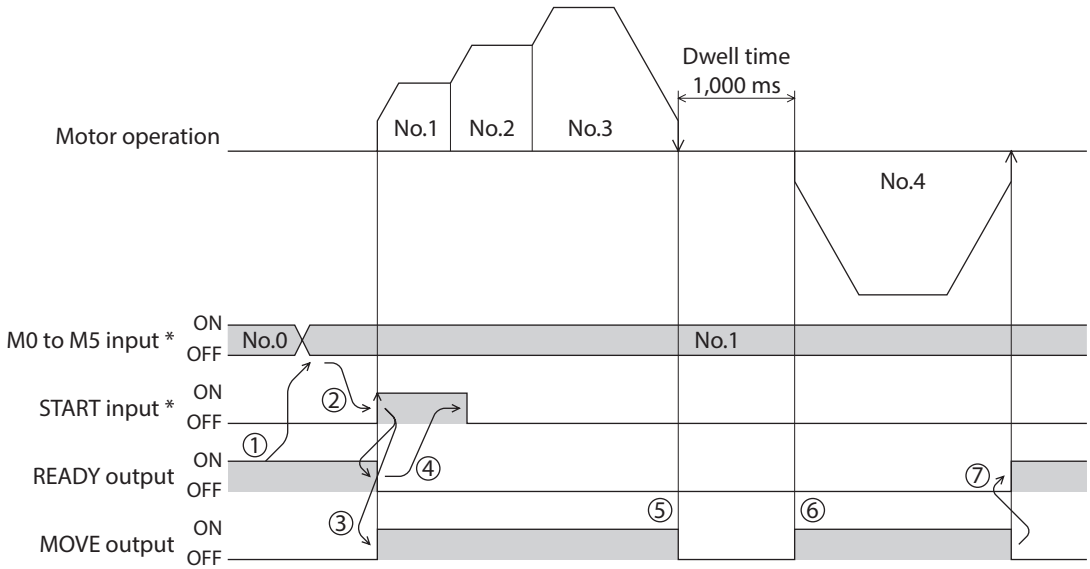

* When controlling the motor via network communication, operation is performed even if the M0 to M5 input and operation input are turned ON simultaneously.

2-2 Return-to-home operation

Return-to-home is an operation in which the reference point of positioning (mechanical home position) is detected automatically. Return-to-home operation is performed to return to the home position from the current position when the power supply is turned on or the positioning operation is completed.
Return-to-home operation can be performed in the following three modes:

Item	Description	Feature
3-sensor mode	The motor operates at the "operating speed of home-seeking." When the HOME sensor is detected, the motor will stop and the stop position will be the home position.	• Three external sensors are needed *1 • Operating speed is high (Operating speed of return-to-home)
2-sensor mode	The motor operates at the "starting speed of home-seeking." When the limit sensor is detected, the motor will rotate in the reverse direction and escape from the limit sensor. After escaping from the limit sensor, the motor will move 200 steps and stop, and then the stop position will be the home position. *2	• Two external sensors are needed • Operating speed is low (Starting speed of return-to-home)
Position preset	When executing the P-PRESET input at the position that the motor stops, the command position will be the value of the "Preset position" parameter. The home position can be set to any position.	• No external sensor is needed • The home position can be set to any position.

*1 In the case of a rotating mechanism, even when using one external sensor, the home position can be detected.
*2 The factory setting is 200 steps. It can be changed to a desired value using the "Backward steps in 2-sensor mode home-seeking" parameter.

■ Additional function

Item	2-sensor mode 3-sensor mode	Position preset	Related parameter
Home offset	Possible	Not possible	Position offset of home-seeking
External sensor (signal) detection	Possible	Not possible	SLIT detection with home-seeking TIM signal detection with home-seeking
Command position after returning to home	The position becomes "0"	Any position	Preset position

● Home offset

This is a function to perform positioning operation of the offset amount set by the parameter after return-to-home operation and to set the stop position to the home position. The position set by the home offset is called "electrical home" in distinction from the usual home position.
If the amount of offset from mechanical home is "0," the mechanical home and electrical home will become the same.

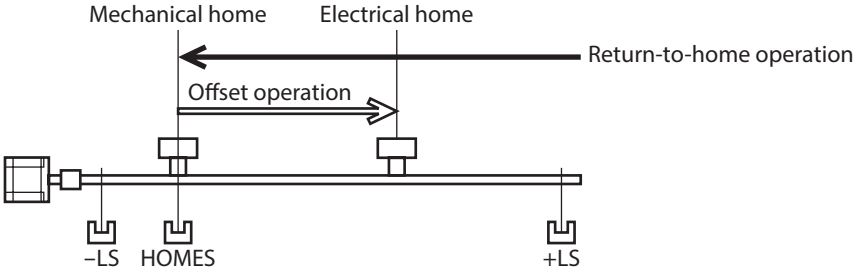

● Detecting the external sensor (signal)

When detecting the home, use of the SLIT input and/or TIM signal will increase the accuracy of home detection.

Note When the TIM output is used, set the resolution to be an integral multiple of 50.

- **Command position after returning to home**

  When executing the P-PRESET input at the position that the motor stops, the command position will be the value of the "Preset position" parameter.

■ Parameters related to return-to-home operation

Parameter name	Description	Setting range	Initial value
Home-seeking mode	Set the mode for return-to-home operation.	0: 2-sensor mode 1: 3-sensor mode	1
Operating speed of home-seeking	Sets the operating speed for return-to-home operation.	1 to 500,000 Hz	1,000
Acceleration/ deceleration of home-seeking	Sets the acceleration/deceleration rate or time for return-to-home operation.	0.001 to 1,000.000 ms/kHz	30.000
Starting speed of home-seeking	Sets the starting speed for return-to-home operation.	1 to 500,000 Hz	100
Position offset of home-seeking	Sets the amount of offset from mechanical home.	–8,388,608 to 8,388,607 step	0
Starting direction of home-seeking	Sets the starting direction for home detection.	0: Negative direction 1: Positive direction	1
SLIT detection with home-seeking	Sets whether or not to concurrently use the SLIT input for return-to-home operation.	0: Disable 1: Enable	0
TIM signal detection with home-seeking	Sets whether or not to concurrently use the TIM signal or ZSG signal for return-to-home operation.	0: Disable 1: Enable (TIM) 2: Enable (ZSG)*	
Backward steps in 2-sensor mode home-seeking	Sets the travel amount after the motor pulls out from the LS sensor in 2-sensor return-to-home operation.	0 to 32,767 step	200

* This signal is used when an encoder is connected.

- **Operation example (when using 3-sensor mode)**

Operating sequence in seeing a time axis

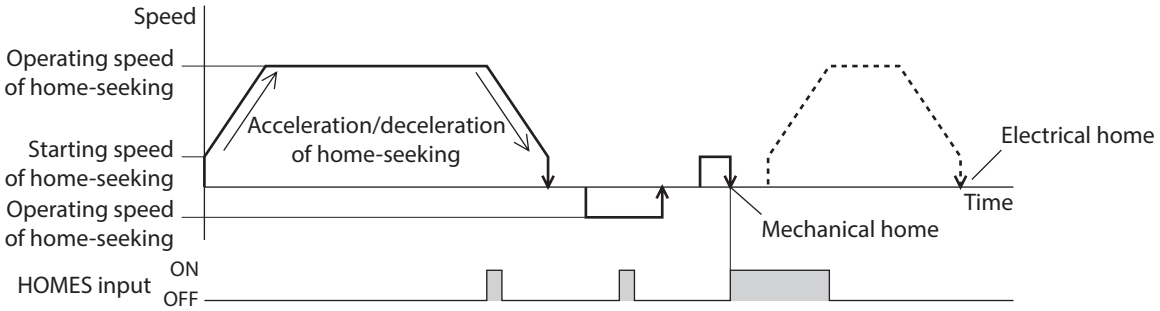

Operating sequence in seeing a travel amount

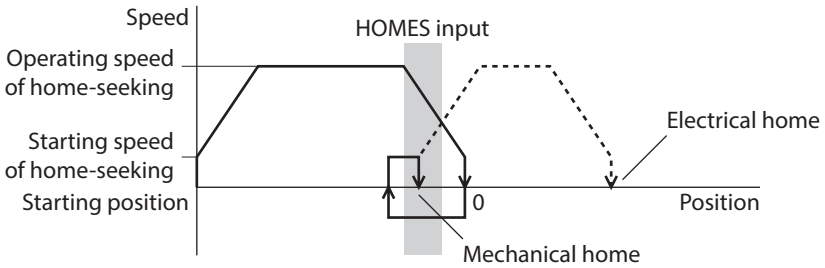

- **Operating method**
  1) Check the READY output is ON.
  2) Turn the HOME input ON.
  3) Return-to-home operation will be started.
  4) Check that the READY output has been turned OFF and turn the HOME input OFF.
  5) When return-to-home operation is completed, the HOME-P output will be turned ON.

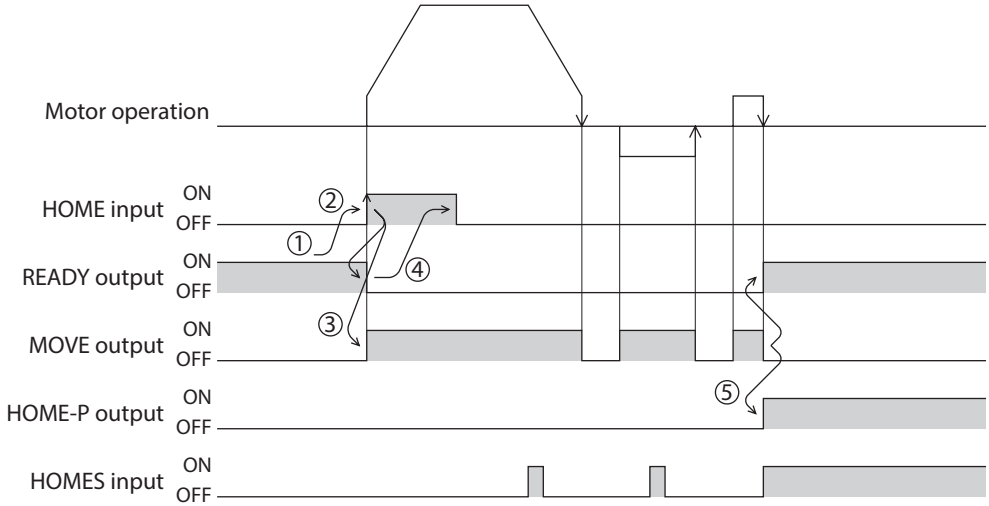

■ Operation sequence of the 3-sensor mode

The home is detected using the three sensors of +LS, –LS and HOMES. The ON edge of HOMES defines the home.
If the "SLIT detection with home-seeking" parameter is set to "Enable," an AND gate will be applied to the ON edge of HOMES and the SLIT input, thereby enabling more accurate home detection.
Also note that by setting the "TIM signal detection with home-seeking" parameter to "Enable," an AND gate can be applied to the TIM signal or encoder Z-phase signal.

- - - indicates when home offset has been set.

Starting position of return-to-home operation	Starting direction of return-to-home operation: + (FWD)	Starting direction of return-to-home operation: – (RVS)
–LS	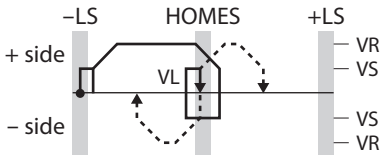	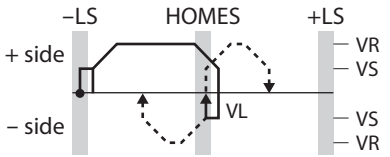
+LS	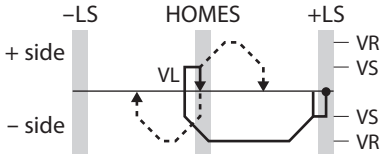	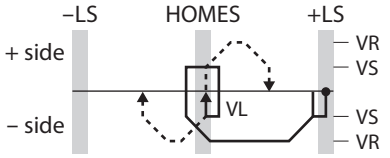
HOMES	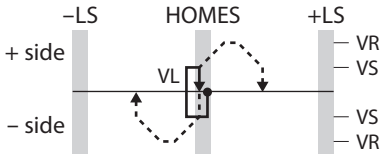	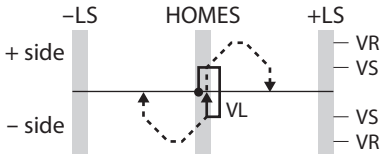
Between HOMES and –LS	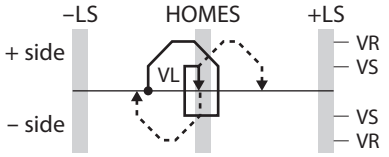	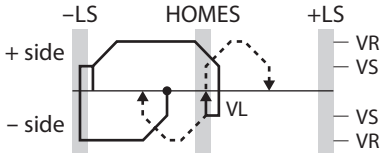
Between HOMES and +LS	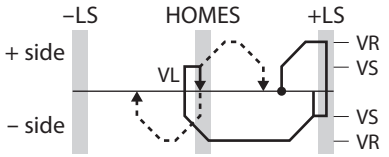	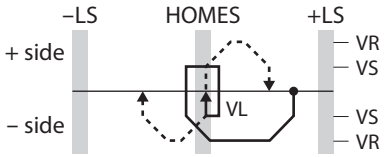

VS: Starting speed of home-seeking
VR: Operating speed of home-seeking
VL: Last speed of return-to-home (When VS < 500 Hz: VS, When VS ≥ 500 Hz: 500 Hz)

■ Operation sequence of the 2-sensor mode

The home is detected using +LS and –LS. When the motor pulls off of the limit sensor and both +LS and –LS turn OFF, the applicable position will be used to define the home.
If the "SLIT detection with home-seeking" parameter is set to "Enable," an AND gate will be applied to the ON edge of HOMES and the SLIT input, thereby enabling more accurate home detection.
Also note that by setting the "TIM signal detection with home-seeking" parameter to "Enable," an AND gate can be applied to the TIM signal or encoder Z-phase signal.

- - - indicates when home offset has been set.

Starting position of return-to-home operation	Starting direction of return-to-home operation: + (FWD)	Starting direction of return-to-home operation: – (RVS)
–LS	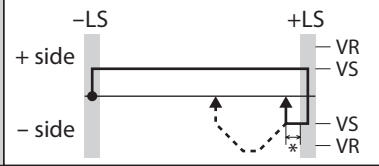	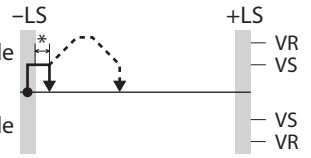
+LS	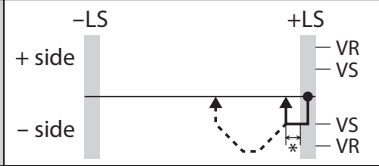	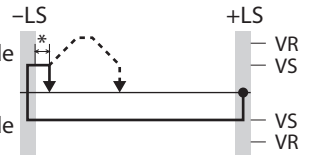
Between –LS and +LS	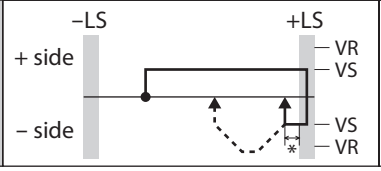	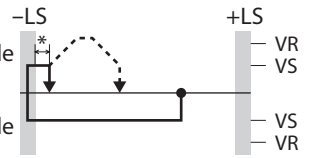

VS: Starting speed of home-seeking
VR: Operating speed of home-seeking

* After pulling off of the limit sensor, the equipment will move by the value set in the "Backward steps in 2-sensor mode home-seeking" parameter (initial value: 200 steps).
When an AND gate is applied to the SLIT signal, TIM signal or encoder Z-phase signal, the home position will be detected after moving the value set in the "Backward steps in 2-sensor mode home-seeking" parameter.

■ Position preset

When the P-PRESET input is turned ON, the command position is set as the value of the "Preset position" parameter. However, the preset will not execute in the following conditions.

- When the motor is operating
- When an alarm is present

Related parameter

Parameter name	Description	Setting range	Initial value
Preset position	Sets the preset position.	–8,388,608 to 8,388,607 step	0

● Operating method

1) Check the READY output is ON.
2) Turn the P-PRESET input ON.
3) When the driver internal processing is completed, the HOME-P output will be turned ON.
4) Check the HOME-P output has been turned ON, and then turn the P-PRESET input OFF.

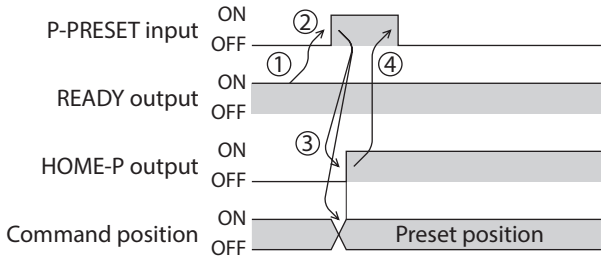

2-3 Continuous operation

The motor operates continuously while the FWD or RVS input is ON.
Operation is performed based on the FWD or RVS input and the operating speed corresponding to the selected operation data No. When the operation data No. is changed during continuous operation, the speed will change to the speed specified by the new operation data No.
When the FWD or RVS input is turned OFF, the motor will decelerate to a stop. If the signal of the same direction is turned ON again during deceleration, the motor will accelerate and continue operating.
If the FWD and RVS inputs are turned ON simultaneously, the motor will decelerate to a stop.

■ Operation data

Operation data for continuous operation are as follows.

Name	Description	Setting range	Initial value
Operating speed	Sets the operating speed in continuous operation.	1 to 500,000 Hz	1,000
Acceleration rate	Sets the acceleration rate in continuous operation.	0.001 to 100.000 ms/kHz	30.000
Deceleration rate	Sets the deceleration rate in continuous operation.		

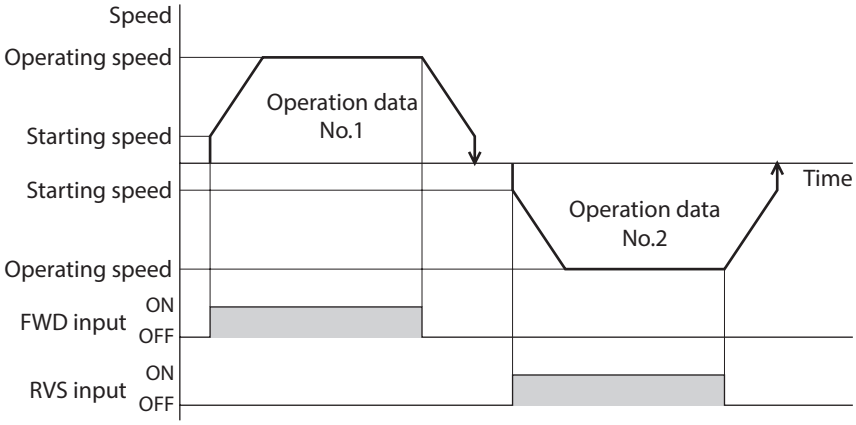

* The acceleration/deceleration for continuous operation can be set as follows using the "Acceleration/deceleration type" parameter:
  Separate : The acceleration/deceleration set under the applicable operation data No. will be followed. (Each 63 data for acceleration and deceleration)
  Common : The setting of the "Common acceleration" and "Common deceleration" parameter will be followed. (Each one data for acceleration and deceleration)

■ Starting method of continuous operation

When selecting the operation data No. and turning the FWD input or RVS input ON, continuous operation will be started.
Select an operation data based on a combination of ON/OFF status of the M0 to M5 inputs. See p.49 for details.

Operation data No.	M5	M4	M3	M2	M1	M0
1	OFF	OFF	OFF	OFF	OFF	**ON**
2	OFF	OFF	OFF	OFF	**ON**	OFF
3	OFF	OFF	OFF	OFF	**ON**	**ON**
⋮	⋮	⋮	⋮	⋮	⋮	⋮
61	**ON**	**ON**	**ON**	**ON**	OFF	**ON**
62	**ON**	**ON**	**ON**	**ON**	**ON**	OFF
63	**ON**	**ON**	**ON**	**ON**	**ON**	**ON**

- **Operating method: When using the FWD input**
  1) Check the READY output is ON.
  2) Select the operation data No. by a combination of the M0 to M5 inputs and turn the FWD input ON.
  3) The motor starts continuous operation. The READY output will be turned OFF.
  4) Select the operation data No.2 by turning the M0 input ON. The motor accelerates to the operating speed of the operation data No.2.
  5) Select the operation data No.1 by turning the M0 input OFF and M1 input ON. The motor decelerates to the operating speed of the operation data No.1.
  6) Turn the FWD input OFF.
  7) The motor will decelerate to a stop and the READY output will be turned ON.

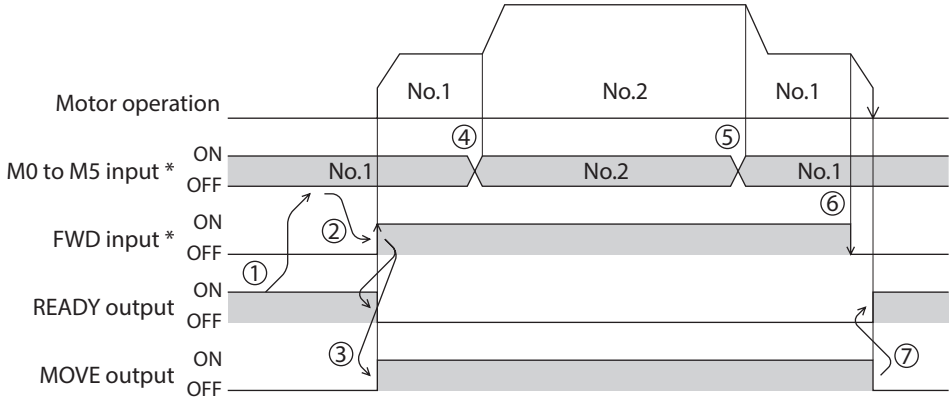

* When controlling the motor via network communication, operation is performed even if the M0 to M5 input and operation input are turned ON simultaneously.

- **Operating method: When using both the FWD and RVS inputs in combination**
  1) Check the READY output is ON.
  2) Select the operation data No. by a combination of the M0 to M5 inputs and turn the FWD input ON.
  3) The motor starts continuous operation. The READY output will be turned OFF.
  4) Turn the FWD input OFF. The motor will decelerate to a stop.
  5) The motor decelerates to a stop. The MOVE output is turned OFF and the READY output is turned ON.
  6) Check the READY output is ON and turn the RVS input ON.
  7) The motor starts continuous operation. The READY output will be turned OFF.
  8) Turn the RVS input OFF. The motor will decelerate to a stop.
  9) The motor decelerates to a stop. The MOVE output is turned OFF and the READY output is turned ON.

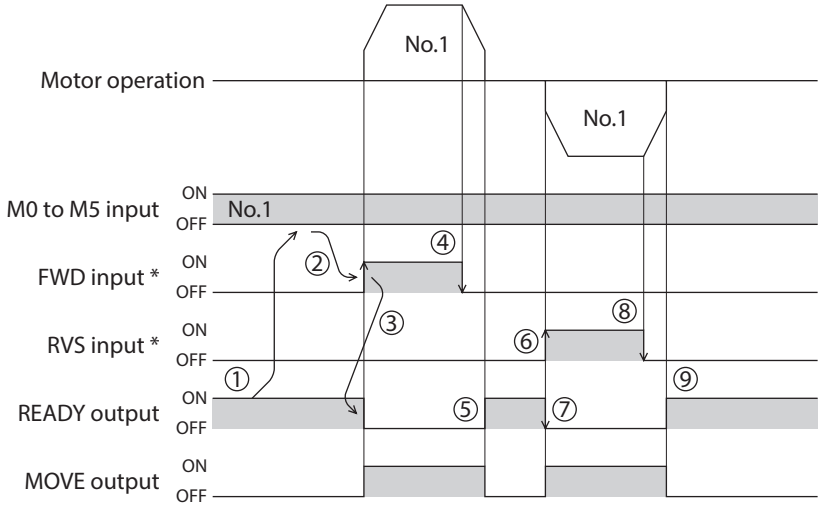

* Before turning the RVS input ON, turn the FWD input OFF, and then make sure that operation is stopped and the READY output is turned ON.

■ Variable speed operation

● When acceleration/deceleration rate is "common"

When accelerating

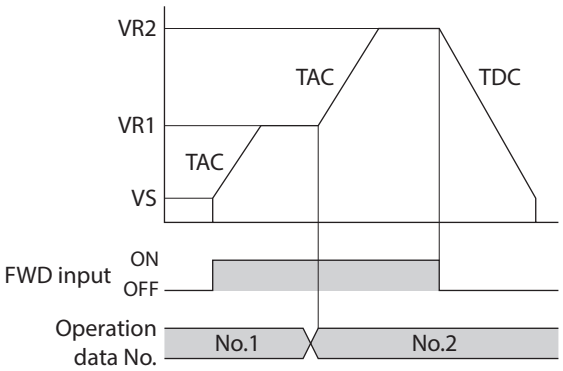

When decelerating

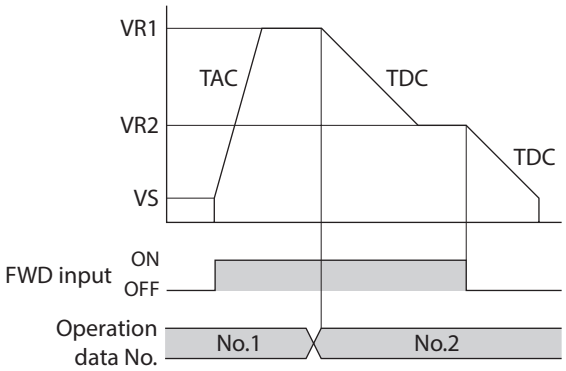

• Explanation of labels

VS: Starting speed (Hz)
VR1: Operating speed of operation data No.1 (Hz)
VR2: Operating speed of operation data No.2 (Hz)
TAC: Common acceleration rate
TDC: Common deceleration rate

● When acceleration/deceleration rate is "separate"

When accelerating

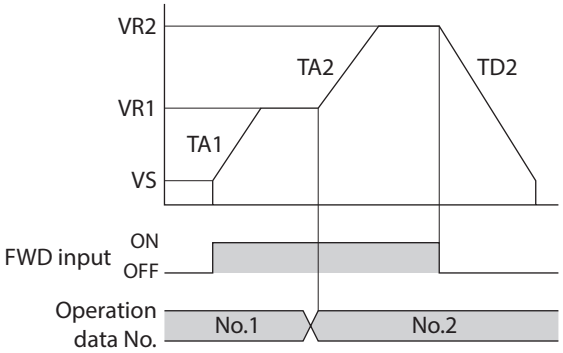

When decelerating

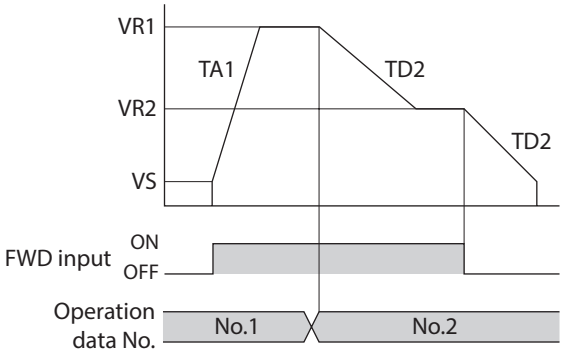

• Explanation of labels

VS: Starting speed (Hz)
VR1: Operating speed of operation data No.1 (Hz)
VR2: Operating speed of operation data No.2 (Hz)
TA1: Acceleration rate of operation data No.1
TA2: Acceleration rate of operation data No.2
TD2: Deceleration rate of operation data No.2

2-4 Other operation

■ Test operation

Test operation is performed using the **MEXE02** or **OPX-2A**. JOG operation, teaching function and positioning operation can be performed.
For details, refer to the operating manual for each product.

● JOG operation

Connection condition or operation status for the motor and driver can be checked using JOG operation.

Related parameters

Parameter name	Description	Setting range	Initial value
JOG operating speed	Sets the operating speed for JOG operation.	1 to 500,000 Hz	1,000
Acceleration/deceleration rate of JOG	Sets the acceleration/deceleration rate or time for JOG operation.	0.001 to 1,000.000 ms/kHz	30.000
JOG starting speed	Sets the starting speed for JOG operation.	1 to 500,000 Hz	100

Example: When performing JOG operation with the OPX-2A

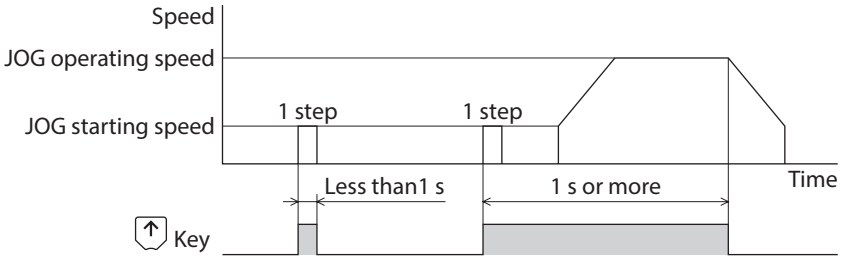

● Teaching function

This is a function to move the motor using the **MEXE02** or **OPX-2A** and set the current position as the position (travel amount) of the operation data. When the position (travel amount) is set using teaching function, the "operation mode" will always be the absolute mode. The operating speed, acceleration/deceleration and starting speed of teaching function are same as those of JOG operation.

● Positioning operation

This is a function to check the set operation data in advance using the **MEXE02** or **OPX-2A**.
It is a convenient function when checking the operation without connecting a programmable controller.

■ Stop operation

● STOP action

When the STOP input is turned ON or STOP is commanded via RS-485 communication while the motor is operating, the motor will stop. The stopping mode is determined by the setting of the "STOP input action" parameter.
For example, the operation when setting "STOP input action" parameter to "deceleration stop" is shown in the figure.

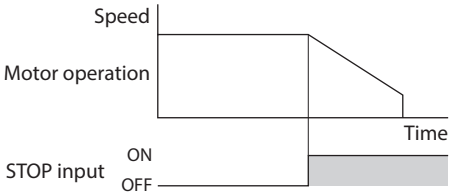

● Hardware overtravel

Hardware overtravel is the function that limits the operation range by installing the limit sensor (±LS) at the upper and lower limit of the operation range. If the "Hardware overtravel" parameter is set to "enable", the motor can be stopped when detecting the limit sensor.
The stopping mode is determined by the setting of "Overtravel action" parameter.
The operation example when setting the "Overtravel action" parameter to "immediate stop" is shown in the figure.

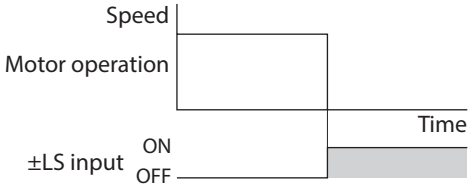

● Software overtravel

The software overtravel is a function that limits the range of movement via software settings.
If the "Software overtravel" parameter is set to "enable", the motor can be stopped when exceeding the software limit. The stopping mode is determined by the setting of "Overtravel action" parameter.
The operation example shown on the figure applies when an operation where a software limit is to be exceeded is started.

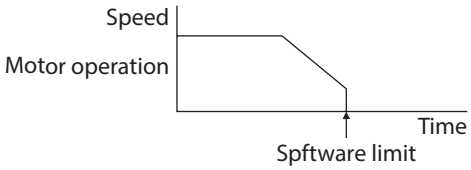

Note Software overtravel will become effective after the position origin is set. See p.89 for setting the position origin.

● Escape from the limit sensor

It is possible to escape in the negative direction when detecting the positive direction limit, and possible to escape in the positive direction when detecting the negative direction limit.
The following operations can be used when escaping from the limit sensor.

Types of operation	Limit sensors (±LS)	Software limit
Positioning operation	Will not operate (unable to escape)	Allowed to operate (able to escape)
Continuous operation Test operation Return-to-home operation	Allowed to operate (able to escape)	

3 Operation data

Up to 63 operation data can be set (data Nos.1 to 63).
If the data is changed, a recalculation and setup will be performed after the operation is stopped.

Name	Description	Setting range	Initial value
Position No.1 to Position No.63	Sets the position (distance) for positioning operation.	–8,388,608 to +8,388,607 step	0
Operating speed No.1 to Operating speed No.63	Sets the operating speed in positioning operation and continuous operation.	0 to 500,000 Hz	1,000
Operation mode No.1 to Operation mode No.63	Selects how to specify the position (travel amount) in positioning operation (absolute mode or incremental mode).	0: INC (Incremental) 1: ABS (Absolute)	0
Operation function No.1 to Operation function No.63	Selects how to operate consecutive operation data.	0: Single-motion 1: Linked-motion 2: Linked-motion 2	0
Acceleration rate No.1 to Acceleration rate No.63	Sets the acceleration rate in positioning operation and continuous operation. *	0.001 to 1,000.000 ms/kHz	30.000
Deceleration rate No.1 to Deceleration rate No.63	Sets the deceleration rate in positioning operation and continuous operation. *		
Sequential positioning No.1 to Sequential positioning No.63	Sets whether to enable or disable sequential positioning operation.	0: Disable 1: Enable	0
Dwell time No.1 to Dwell time No.63	Sets the dwell time to be used in linked-motion operation 2.	0 to 50,000 (1=0.001 s)	0

* This item is effective when the "Acceleration/deceleration type" parameter is set to "separate." If this parameter is set to "common", the values of the "Common acceleration" and "Common deceleration" parameters will be used (initial value: separate).

4 Parameter

The parameters are saved in the RAM or non-volatile memory. The data saved in the RAM will be erased once the power supply is turned off. On the other hand, the parameters saved in the non-volatile memory will be retained even after the power supply is turned off.
When turning the driver 24 VDC power ON, the parameters saved in the non-volatile memory will be sent to the RAM. Then, the recalculation and setup for the parameters are executed in the RAM.

Note
- The parameters are written in the RAM when writing via RS-485 communication.
- The non-volatile memory can be rewritten approximately 100,000 times.

4-1 Parameter list

■ Application parameter

I/O parameter (p.84)	• START input mode • I/O STOP input • STOP action • STOP contact configuration • C-ON logic configuration • OUT1 signal mode selection • OUT2 signal mode selection • OUT3 signal mode selection • OUT4 signal mode selection • HOME/P-PRESET input switching • Motor excitation mode • HOME/FWD/RVS input mode	• Data No. input mode • AWO contact configuration • Hardware overtravel detection • LS contact configuration • HOMES contact configuration • SLIT contact configuration • Overtravel action • Preset position • Area 1 • Area 2 • Encoder counter preset value
Motor parameter (p.85)	• Operating current • Standstill current	
Speed parameter (p.85)	• Common acceleration rate • Common deceleration rate • Starting speed	• JOG operating speed • JOG acceleration (deceleration) rate • JOG starting speed • Acceleration (deceleration) rate type
Return-to-home parameter (p.86)	• Home-seeking mode • Operating speed of home-seeking • Acceleration (deceleration) rate of home-seeking • Starting speed of home-seeking • Position offset of home-seeking	• Starting direction of home-seeking • SLIT detection with home-seeking • TIM signal detection with home-seeking • Backward steps in 2-sensor mode home-seeking
Alarm/warning parameter (p.86)	• Stepout detection band • Overvoltage warning • Overheat warning	
Common parameter (p.87)	• Software overtravel • Positive software limit • Negative software limit • Display mode of the data setter speed • The data setter editing mode	• Communication timeout action • Receive period • Response interval • Receive monitoring • Stepout detection action

■ System parameters

Operation setting parameter (p.87)	• Motor rotation direction • Stepout detection • Motor step angle	• Encoder electronic gear A • Encoder electronic gear B
Communication parameter (p.88)	• Communication axis number • Communication protocol • Communication parity • Communication stop bit	• Transmission waiting time • Communication timeout • Communication error alarm

Note When a system parameter has been changed, the new parameter will become effective after the power is cycled.

4-2 I/O parameter

Parameter name	Description	Setting range	Initial value
START input mode *1	Sets whether to input the START input signal via I/O or RS-485 communication.	0: RS-485 communication 1: I/O	1
I/O STOP input *1 *2	Changes the setting to enable/disable STOP input of I/O.	0: Disable 1: Enable	1
STOP action	Sets how the motor should stop when a STOP input is turned ON.	0: Immediate stop 1: Decelerate stop 2: Immediate stop & Current OFF 3: Decelerate stop & Current OFF	1
STOP contact configuration	Sets the STOP input logic.	0: Make (N.O.) 1: Break (N.C.)	1
C-ON logic configuration *3	Sets the C-ON logic for RS-485 communication.	0: 0=Not excited, 1=Excited 1: 0=Excited, 1=Not excited	0
OUT1 signal mode selection	Sets the function assigned to the OUT1 output.	See table next.	5
OUT2 signal mode selection	Sets the function assigned to the OUT2 output.		7
OUT3 signal mode selection	Sets the function assigned to the OUT3 output.		8
OUT4 signal mode selection	Sets the function assigned to the OUT4 output.		9
HOME/P-PRESET input switching	Sets whether to use HOME or P-PRESET input.	0: HOME 1: P-PRESET	0
Motor excitation mode *1	Sets whether to control the motor excitation via I/O or RS-485 communication.	0: RS-485 communication 1: I/O	1
HOME/FWD/RVS input mode *1	Sets whether to input the HOME, FWD and RVS input signals via I/O or RS-485 communication.		
Data No. input mode *1	Sets whether to input the M0 to M5 input signals via I/O or RS-485 communication.		
AWO contact configuration	Sets the AWO input logic.	0: Make (N.O.) 1: Break (N.C.)	0
Hardware overtravel detection *4	Sets whether to enable or disable hardware overtravel detection using LS inputs.	0: Disable 1: Enable	1
LS contact configuration	Sets the ±LS input logics.	0: Make (N.O.) 1: Break (N.C.)	0
HOMES contact configuration	Sets the HOMES input logic.		
SLIT contact configuration	Sets the SLIT input logic.		
Overtravel action	Sets the motor action to take place upon the occurrence of overtravel.	0: Immediate stop 1: Decelerate stop	0
Preset position	Sets the preset position.	–8,388,608 to +8,388,607 step	

Parameter name	Description	Setting range	Initial value
Area 1	Sets the range for AREA output. The AREA output will be ON when the motor is inside the area set by the area 1 and area 2.	–8,388,608 to +8,388,607 step	0
Area 2			
Encoder counter preset value *5	Sets the encoder counter preset value.		

*1 Set the parameter when controlling the system via RS-485 communication.
*2 If this parameter is disabled, the I/O STOP input will become ineffective and only the stop input received via RS-485 communication will become effective.
*3 When "Motor excitation mode" parameter is set to "RS-485 communication", the excitation condition of the motor at the power ON varies depending on the "C-ON logic configuration" parameter. The motor is not excited if the "C-ON logic configuration" parameter is set to "0," and excited if the parameter is set to "1."
*4 Even when this parameter is disabled, the ±LS will still become effective during a return-to-home operation.
*5 This parameter is used when an encoder is connected.

Setting range of "OUT signal mode selection" parameter

5: AREA 6: TIM 7: READY	8: WNG 9: HOME-P 10: ZSG *	11: R-OUT1 12: R-OUT2 13: STEPOUT *	14: O.H. 15: R-OUT3 16: R-OUT4

* This signal is used when an encoder is connected.

4-3 Motor parameter

Parameter name	Description	Setting range	Initial value
Operating current	Sets the motor operating current based on the rated current being 100%.	5 to 100%	100
Standstill current	Sets the motor standstill current as a percentage of the rated current, based on the rated current being 100%.	5 to 50%	50

Note

- Decrease the operating current and standstill current when there is an allowance in the motor torque and you wish to reduce vibration during operation or suppress heat generation from the motor. However, be careful of an excessive decrease in current, since the motor torque and holding brake force will drop in rough proportion to the operating current.
- The standstill current is the rated current (100%) multiplied by the standstill current ratio.

4-4 Speed parameter

Parameter name	Description	Setting range	Initial value
Common acceleration rate	Sets the common acceleration rate in positioning operation and continuous operation.	0.001 to 1,000.000 ms/kHz	30.000
Common deceleration rate	Sets the common deceleration rate in positioning operation and continuous operation.		
Starting speed	Sets the starting speed in positioning operation and continuous operation. The motor will operate at the starting speed if the operating speed is below the starting speed.	1 to 500,000 Hz	100
JOG operating speed	Sets the operating speed for JOG operation.		1,000
JOG acceleration/ deceleration rate	Sets the acceleration/deceleration rate for JOG operation.	0.001 to 1,000.000 ms/kHz	30.000
JOG starting speed	Sets the starting speed for JOG operation.	1 to 500,000 Hz	100
Acceleration/deceleration type	Sets whether to use the common acceleration/ deceleration rate or the acceleration/deceleration rate specified for the operation data.	0: Common 1: Separate	0

4-5 Return-to-home parameter

Parameter name	Description	Setting range	Initial value
Home-seeking mode	Set the mode for return-to-home operation.	0: 2 sensors 1: 3 sensors	1
Operating speed of home-seeking	Sets the operating speed for return-to-home operation.	1 to 500,000 Hz	1,000
Acceleration/deceleration rate of home-seeking	Sets the acceleration/deceleration rate for return-to-home operation.	0.001 to 1,000.000 ms/kHz	30.000
Starting speed of home-seeking	Sets the starting speed for return-to-home operation.	1 to 500,000 Hz	100
Position offset of home-seeking	Sets the amount of offset from mechanical home.	−8,388,608 to +8,388,607 step	0
Starting direction of home-seeking	Sets the starting direction for home detection.	0: Negative direction 1: Positive direction	1
SLIT detection with home-seeking	Sets whether or not to concurrently use the SLIT input for return-to-home operation.	0: Disable 1: Enable	0
TIM signal detection with home-seeking	Sets whether or not to concurrently use the TIM (ZSG) output for return-to-home operation.	0: Disable 1: Enable (TIM) 2: Enable (ZSG) *	0
Backward steps in 2-sensor mode home-seeking	Sets the travel amount after the motor pulls out from the LS sensor in 2-sensor return-to-home operation.	0 to 32,767 step	200

* This signal is used when an encoder is connected.

4-6 Alarm/warning parameter

Parameter name	Description	Setting range	Initial value
Stepout detection band *	Sets the judgment condition for misstep detection using the deviation (angle) between the command position and encoder counter value.	0.1 to 360.0 deg	7.2
Overvoltage warning	Sets the voltage at which an overvoltage warning generates.	25.0 to 35.0 V	31.0
Overheat warning	Sets the temperature at which an overheat warning generates.	40 to 85 °C	85

* This signal is used when an encoder is connected.

4-7 Common parameter

Parameter name	Description	Setting range	Initial value
Software overtravel	Sets whether to enable or disable software overtravel detection using soft limits.	0: Disable 1: Enable	1
Positive software limit	Sets the value of soft limit in positive direction.	–8,388,608 to +8,388,607 step	8,388,607
Negative software limit	Sets the value of soft limit in negative direction.		–8,388,608
Display mode of the data setter speed	Sets the display method of monitored speed in the **OPX-2A**.	0: Signed 1: Absolute	0
The data setter editing mode *1	Sets whether to enable editing by the **OPX-2A** when the power is turned on.	0: Disable 1: Enable	1
Communication timeout action	Sets how to stop the motor when a communication timeout occurs.	0: Immediate stop 1: Decelerate stop	1
Receive period *2	Sets the receive period for RS-485 communication (T1). See p.192 for details.	0: Function disabled 0.01 to 9.99 sec.	0
Response interval *2	Sets the response period for RS-485 communication (T2). See p.192 for details.	0 to 1,000 ms	50
Receive monitoring *2	Sets the receive monitor period for RS-485 communication (T3). See p.192 for details.	0.01 to 9.99 sec.	0.10
Stepout detection action *3	Sets the operation to be performed when the deviation between the command position and encoder counter value reaches the stepout detection band.	0: No operation (alarm/ warning not present) 1: Warning 2: Alarm	0

*1 The edit lock function can be activated/cancelled using the **OPX-2A**.
*2 Set this parameter when GW Protocol Version 1 is used.
*3 This parameter is used when an encoder is connected.

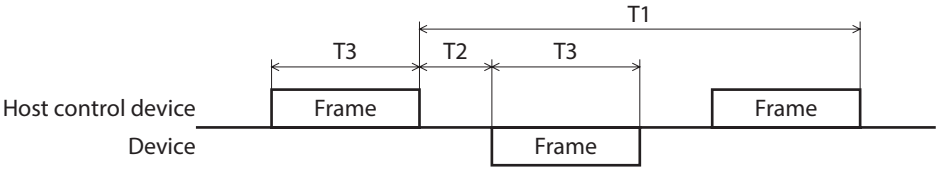

4-8 Operation setting parameter

Parameter name	Description	Setting range	Initial value
Motor rotation direction	Sets the rotation direction of motor output shaft.	0: +direction=CCW 1: +direction=CW	1
Stepout detection *	Sets whether to enable or disable the misstep detection function.	0: Disable 1: Enable	0
Motor step angle	Sets the motor step angle.	See table next.	0
Encoder electronic gear A *	Sets the encoder electronic gear A.	1 to 250,000	500
Encoder electronic gear B *	Sets the encoder electronic gear B.		

* When an encoder is connected, this parameter is used in the misstep detection function. It does not affect the encoder counter value.

- **Setting value of the "Motor step angle" parameter**

If the base step angle of the motor is 0.72°

Setting	Step angle	Number of divisions
0	0.72°	1
1	0.36°	2
2	0.288°	2.5
3	0.18°	4
4	0.144°	5
5	0.09°	8
6	0.072°	10
7	0.036°	20
8	0.0288°	25
9	0.018°	40
10	0.0144°	50
11	0.009°	80
12	0.0072°	100
13	0.00576°	125
14	0.0036°	200
15	0.00288°	250

If the base step angle of the motor is 0.36°

Setting	Step angle	Number of divisions
0	0.36°	1
1	0.18°	2
2	0.144°	2.5
3	0.09°	4
4	0.072°	5
5	0.045°	8
6	0.036°	10
7	0.018°	20
8	0.0144°	25
9	0.009°	40
10	0.0072°	50
11	0.0045°	80
12	0.0036°	100
13	0.0028°	125
14	0.0018°	200
15	0.00144°	250

Note

- Step angles are theoretical values.
- With the geared type, the value of "step angle/gear ratio" becomes the actual step angle.
- The base step angle is 0.36° for high-resolution type motors.

4-9 Communication parameter

Parameter name	Description	Setting range	Initial value
Communication axis number	Sets the axis number for RS-485 communication.	0 to 31	15
Communication protocol	Sets the protocol for RS-485 communication.	0: Modbus RTU 1: GW Ver.1	0
Communication parity *	Sets the parity for RS-485 communication.	0: None 1: Even number 2: Odd number	1
Communication stop bit *	Sets the stop bit for RS-485 communication.	0: 1 bit 1: 2 bits	0
Transmission waiting time *	Sets the transmission waiting time for RS-485 communication.	0 to 1,000.0 ms	10.0
Communication timeout *	Sets the condition in which a communication timeout occurs in RS-485 communication.	0: Not monitored 1 to 10,000 ms	0
Communication error alarm	Sets the condition in which a RS-485 communication error alarm generates. A communication error alarm generates after a RS-485 communication error has occurred by the number of times set here.	1 to 10 times	3

* Set this parameter when Modbus RTU Protocol is used.

5 Related functions

This chapter explains the useful functions that facilitate operation, functions that become available when an encoder is connected, and the like.

5-1 Position control

The driver has an internal oscillating-pulse counter. The command position can be read from this counter using the **MEXE02**, **OPX-2A** or RS-485 communication. You can also check the command position by counting the number of times a PLS-OUT or DIR-OUT output signal has been output.
The control range of command positions is –2,147,483,648 to 2,147,483,647.
The command position will be cleared to 0 once the return-to-home operation ends successfully. If a preset is performed using the P-PRESET input, the command position will change to the value set in the "Preset position" parameter.
If an encoder is connected and the "Stepout detection" parameter is set to "enable", the command position will be refreshed by the encoder counter value while the motor is not excited.

5-2 Encoder input

- You can use the **MEXE02**, **OPX-2A** or RS-485 communication command's "encoder counter" to read the 90° phase difference signal that is input from the encoder. The read value has been multiplied by 1.
- The encoder counter can be cleared to 0 by executing the RS-485 communication command's "clear counter." Also, a successful completion of return-to-home operation resets the encoder counter to 0.
- Executing the **MEXE02**, **OPX-2A** or RS-485 communication command's "preset encoder counter" changes the encoder counter value to the one set as the "encoder counter preset value."
- When an encoder is connected, the misstep detection function becomes available. Take note that the encoder input is counted even when the misstep detection function is not used.

Note Perform a counter clear or encoder counter preset while the motor is stopped.

Encoder input specifications

A-phase B-phase	Input frequency	100 kHz max.
	Counting range	–2,147,483,648 to +2,147,483,647 pulse
	Counting mode	90° phase difference input, multiplied by 1
	Interface	Differential line receiver (26C32 or equivalent)
Z-phase	Input width	1 ms or more
	Interface	Differential line receiver (26C32 or equivalent)
Encoder cable length		10 m (32.8 ft.) max. *

* If you want to extend the lead wires between the encoder and driver, use wires of AWG24 to 22 (0.2 to 0.3 mm^2).

• Increment

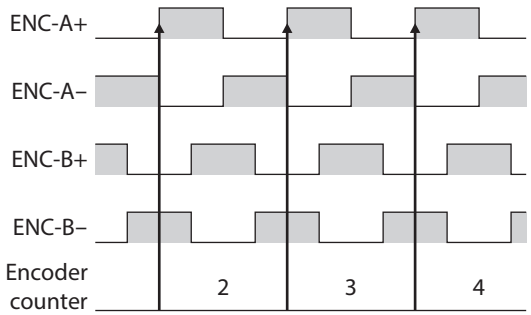

• Decrement

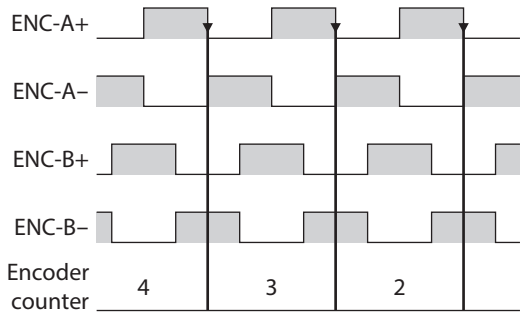

This example assumes that the "Motor rotation direction" parameter is set to "+direction=CW." If this parameter is set to "+direction=CCW", the counter value will decrease with each increment, and increase with each decrement.

5-3 Misstep detection function

This function becomes effective when an encoder is connected. Specifically, the deviation between the command position and encoder counter is monitored.
The sub-functions specified below become available when the "Stepout detection" parameter is set to "enable."

- **Deviation error detection**

  When the deviation reaches the value set in the "Stepout detection band" parameter (initial value: 7.2°), a deviation error will be recognized.
  If the base step angle of the motor is 0.72°, set the value of the "Stepout detection band" parameter to 7.2°.
  If the base step angle of the motor is 0.36°, set the value of the "Stepout detection band" parameter to 3.6°.
  Deviation error detection will start after the motor has remained excited for 500 ms. This function is disabled during return to mechanical home operation.

- **STEPOUT output**

  This signal notifies a deviation error. Assign the STEPOUT output to one of the OUT0 to OUT4 outputs.

- **Alarm/warning**

  You can cause an alarm or warning to be generated upon detection of a deviation error.
  - Generate an excessive position deviation alarm: Set the "Stepout detection action" parameter to "alarm."
  - Generate an excessive position deviation warning: Set the "Stepout detection action" parameter to "warning."
  - Do not generate an alarm or warning: Set the "Stepout detection action" parameter to "no operation."

- **Command position update**

  The command position is corrected by the encoder counter while the motor is not excited. The command position will still be refreshed even when the motor output shaft is turned by an external force while the motor excitation is stopped.

■ How to recover from deviation error

Perform one of the following operations to recover from the deviation error:
- Stop the motor excitation.
- Perform return to mechanical home.
- Clear the counter.

When the "Stepout detection action" parameter is set to "alarm"

When a deviation error is detected, an excessive position deviation alarm will generate. In this case, reset the alarm by following the procedure below:

1. Stop the motor excitation or clear the counter to recover from the deviation error.
2. Turn the ALM-RST input ON to reset the alarm.
3. Perform return-to-home operation, if necessary.

Note If an excessive position deviation alarm generates, turning the ALM-RST input ON alone will not reset the alarm. Be sure to recover from the deviation error first, and then reset the alarm.

■ Encoder electronic gear settings

Even when the motor resolution is different from the encoder resolution, you can still detect a deviation error by setting the encoder electronic gears. The encoder electronic gears are used to determine a deviation error and will not affect the encoder counter value.

Parameter	Description
Encoder electronic gear A	Set the encoder resolution. Set to 500 if the encoder pulse count per motor revolution is 500 P/R. Note that the resolution is 500 P/R for motors with encoder.
Encoder electronic gear B	Set the motor resolution. Set to 1,000 if the pulse count required for one motor revolution is 1,000 P/R.

- **Setting example 1**

A setting example where the base step angle is 0.72° and encoder resolution is 500 P/R is given below.

Step angle	Number of divisions	"Encoder electronic gear A " parameter	"Encoder electronic gear B" parameter
0.72°	1	500	500
0.36°	2		1,000
0.288°	2.5		1,250
0.18°	4		2,000
0.144°	5		2,500
0.09°	8		4,000
0.072°	10		5,000
0.036°	20		10,000
0.0288°	25		12,500
0.018°	40		20,000
0.0144°	50		25,000
0.009°	80		40,000
0.0072°	100		50,000
0.00576°	125		62,500
0.0036°	200		100,000
0.00288°	250		125,000

- **Setting example 2**

A setting example where the base step angle is 0.36° and encoder resolution is 500 P/R is given below.

Step angle	Number of divisions	"Encoder electronic gear A " parameter	"Encoder electronic gear B" parameter
0.36°	1	500	1,000
0.18°	2		2,000
0.144°	2.5		2,500
0.09°	4		4,000
0.072°	5		5,000
0.045°	8		8,000
0.036°	10		10,000
0.018°	20		20,000
0.0144°	25		25,000
0.009°	40		40,000
0.0072°	50		50,000
0.0045°	80		80,000
0.0036°	100		100,000
0.00288°	125		125,000
0.0018°	200		200,000
0.00144°	250		250,000

Note

- The accuracy of deviation varies depending on the operating speed and load. Be sure to check the deviation on the actual system.
- If you are providing the encoder on your own and installing it to the motor, take note that the accuracy of deviation error detection is also affected by the encoder resolution and assembly accuracy. Be sure to check the deviation on the actual system.
- If misstep occurs, the home position on the equipment side deviates from the home position recognized by the driver. If the operation is continued in this condition, the equipment may be damaged. Accordingly, take prompt actions if misstep is detected.
- If the step angle has been changed, be sure to change the value of the "Encoder electronic gear B" parameter accordingly. Similarly if the encoder resolution has changed, be sure to change the value of the "Encoder electronic gear A" parameter accordingly. If the gears are not set properly, the command position will not be updated correctly and a deviation error will be detected.

■ Resolution

If the misstep function is used, use of an encoder with a resolution of 500 P/R.

Note

If you are providing the encoder on your own, use the one that meets the specifications on p.89.

4 Method of control via I/O

This part explains when the operation is controlled via I/O after setting the operation data and parameters by the MEXE02 or OPX-2A.

◆Table of contents

1 Guidance 94

2 Operation data 97

3 Parameter 98

3-1 Parameter list 98
3-2 I/O parameter 99
3-3 Motor parameter 100
3-4 Speed parameter 100
3-5 Return-to-home parameter 100
3-6 Alarm/warning parameter 101
3-7 Common parameter 101
3-8 Communication parameter 101
3-9 Operation setting parameter 102

4 Timing charts 103

1 Guidance

If you are new to the **CRK** Series built-in controller type, read this section to understand the operating methods along with the operation flow.

Note Before operating the motor, check the condition of the surrounding area to ensure safety.

STEP 1 Check the installation and connection

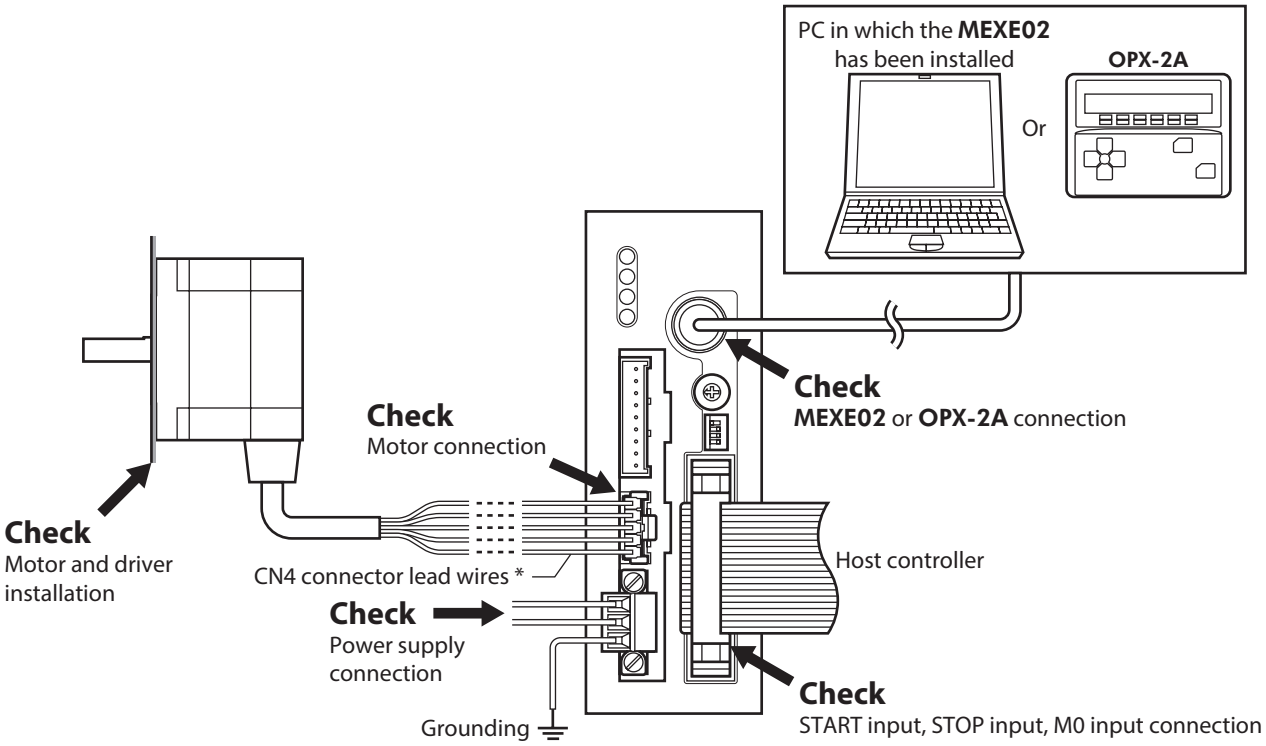

* Included item.

STEP 2 Turn on the power supply and set the operation data

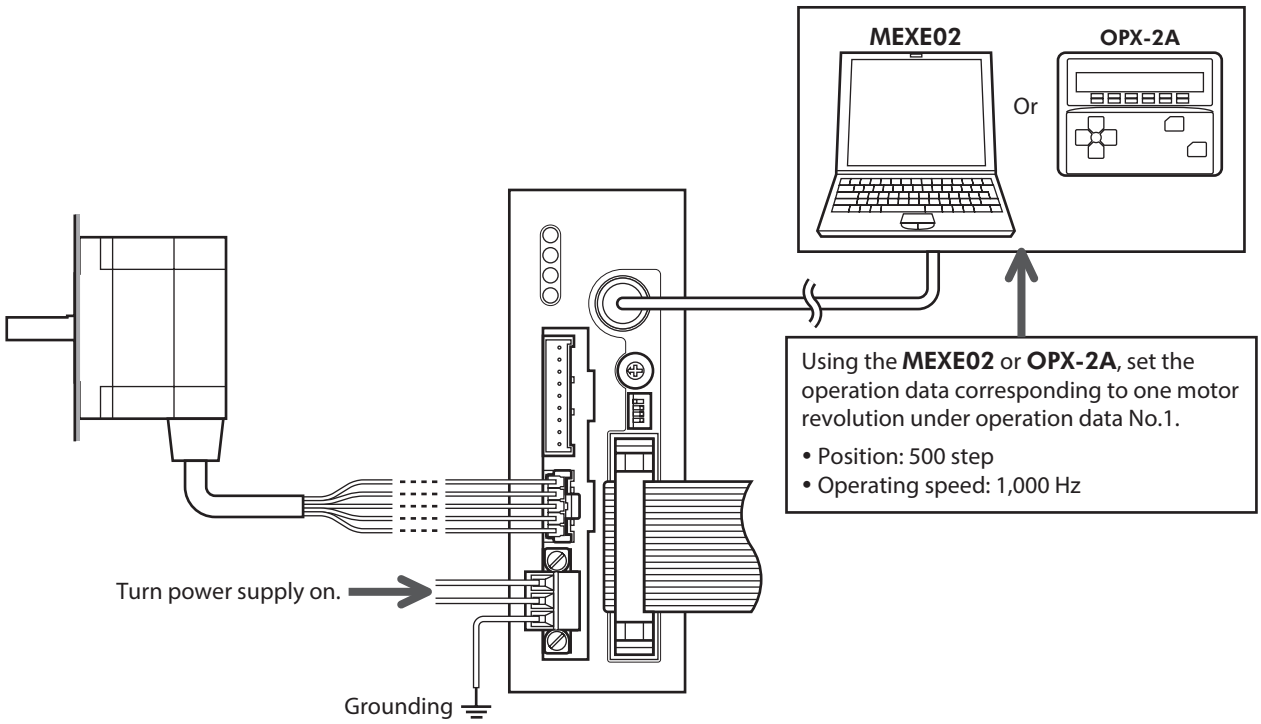

STEP 3 Operate the motor

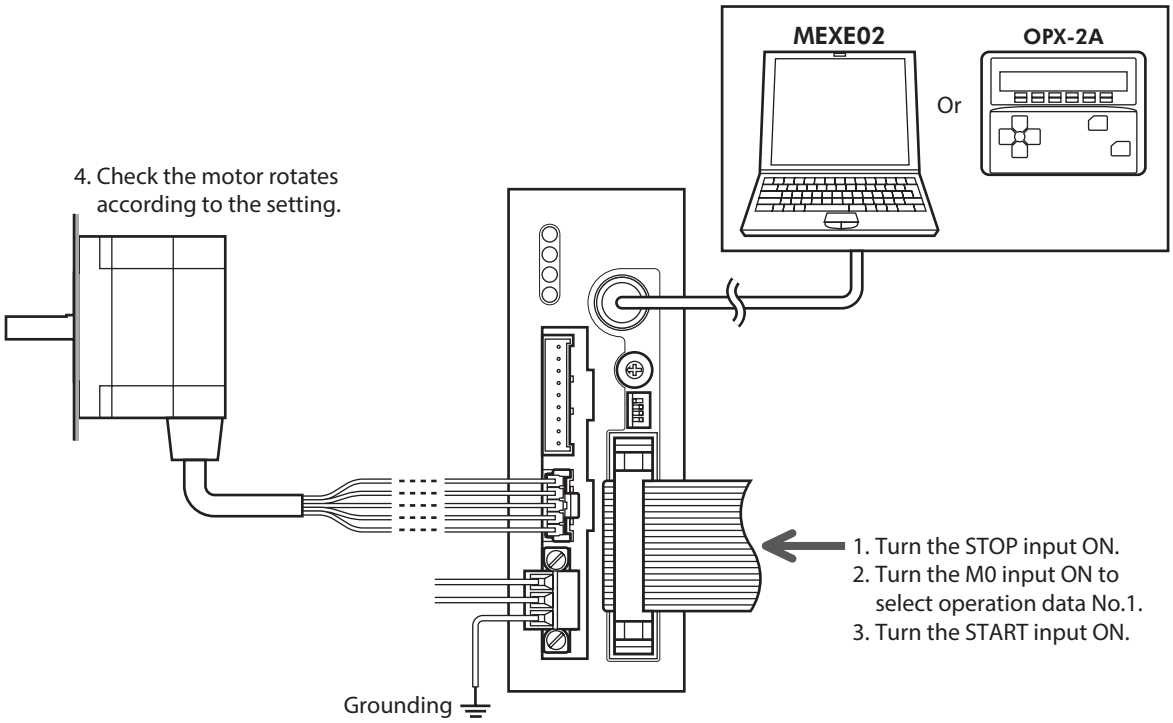

STEP 4 Were you able to operate the motor properly?

How did it go? Were you able to operate the motor properly?
If the motor does not function, check the following points:

- Is the STOP input ON? (factory setting: normally closed)
- Is any alarm present?
- Are the power supply and motor connected securely?

For more detailed settings and functions, refer to "3 Parameter" on p.98.

2 Operation data

Up to 63 operation data can be set (data Nos.1 to 63).
If the data is changed, a recalculation and setup will be performed after the operation is stopped.

Name	Setting range	Initial value
Position No.1 to Position No.63	−8,388,608 to +8,388,607 step	0
Operating speed No.1 to Operating speed No.63	0 to 500,000 Hz	1,000
Operation mode No.1 to Operation mode No.63	0: INC (Incremental) 1: ABS (Absolute)	0
Operation function No.1 to Operation function No.63	0: Single-motion 1: Linked-motion 2: Linked-motion 2	0
Acceleration rate No.1 * to Acceleration rate No.63 *	0.001 to 1,000.000 ms/kHz	30.000
Deceleration rate No.1 * to Deceleration rate No.63 *		
Sequential positioning No.1 to Sequential positioning No.63	0: Disable 1: Enable	0
Dwell time No.1 to Dwell time No.63	0 to 50,000 (1=0.001 s)	0

* This item is effective when the "Acceleration/deceleration type" parameter is set to "separate." If this parameter is set to "common", the values of the "Common acceleration" and "Common deceleration" parameters will be used (initial value: separate).

3 Parameter

3-1 Parameter list

■ Application parameter

I/O parameter (p.99)	• START input mode • I/O STOP input • STOP action • STOP contact configuration • C-ON logic configuration • OUT1 signal mode selection • OUT2 signal mode selection • OUT3 signal mode selection • OUT4 signal mode selection • HOME/P-PRESET input switching • Motor excitation mode • HOME/FWD/RVS input mode	• Data No. input mode • AWO contact configuration • Hardware overtravel detection • LS contact configuration • HOMES contact configuration • SLIT contact configuration • Overtravel action • Preset position • Area 1 • Area 2 • Encoder counter preset value
Motor parameter (p.100)	• Operating current	• Standstill current
Speed parameter (p.100)	• Common acceleration rate • Common deceleration rate • Starting speed	• JOG operating speed • JOG acceleration (deceleration) rate • JOG starting speed • Acceleration (deceleration) rate type
Return-to-home parameter (p.100)	• Home-seeking mode • Operating speed of home-seeking • Acceleration (deceleration) rate of home-seeking • Starting speed of home-seeking • Position offset of home-seeking	• Starting direction of home-seeking • SLIT detection with home-seeking • TIM signal detection with home-seeking • Backward steps in 2-sensor mode home-seeking
Alarm/warning parameter (p.101)	• Stepout detection band • Overvoltage warning	• Overheat warning
Common parameter (p.101)	• Software overtravel • Positive software limit • Negative software limit • Display mode of the data setter speed • The data setter editing mode	• Communication timeout action • Receive period • Response interval • Receive monitoring • Stepout detection action

■ System parameter

Communication parameter (p.101)	• Communication axis number • Communication protocol • Communication parity • Communication stop bit	• Transmission waiting time • Communication timeout • Communication error alarm
Operation setting parameter (p.102)	• Motor rotation direction • Stepout detection • Motor step angle	• Encoder electronic gear A • Encoder electronic gear B

Note When a system parameter has been changed, the new parameter will become effective after the power is cycled.

3-2 I/O parameter

Parameter name	Setting range	Initial value
START input mode *1	0: RS-485 communication 1: I/O	1
I/O STOP input *1 *2	0: Disable 1: Enable	1
STOP action	0: Immediate stop 1: Decelerate stop 2: Immediate stop & Current OFF 3: Decelerate stop & Current OFF	1
STOP contact configuration	0: Make (N.O.) 1: Break (N.C.)	1
C-ON logic configuration *3	0: 0=Not excited, 1=Excited 1: 0=Excited, 1=Not excited	0
OUT1 signal mode selection	See table next.	5
OUT2 signal mode selection		7
OUT3 signal mode selection		8
OUT4 signal mode selection		9
HOME/P-PRESET input switching	0: HOME 1: P-PRESET	0
Motor excitation mode *1	0: RS-485 communication 1: I/O	1
HOME/FWD/RVS input mode *1		
Data No. input mode *1		
AWO contact configuration	0: Make (N.O.) 1: Break (N.C.)	0
Hardware overtravel detection *4	0: Disable 1: Enable	1
LS contact configuration	0: Make (N.O.) 1: Break (N.C.)	0
HOMES contact configuration		
SLIT contact configuration		
Overtravel action	0: Immediate stop 1: Decelerate stop	0
Preset position	−8,388,608 to +8,388,607 step	0
Area 1		
Area 2		
Encoder counter preset value *5		

*1 Set the parameter when controlling the system via RS-485 communication.
*2 If this parameter is disabled, the I/O STOP input will become ineffective and only the stop input received via RS-485 communication will become effective.
*3 When "Motor excitation mode" parameter is set to "RS-485 communication", the excitation condition of the motor at the power ON varies depending on the "C-ON logic configuration" parameter. The motor is not excited if the "C-ON logic configuration" parameter is set to "0," and excited if the parameter is set to "1."
*4 Even when this parameter is disabled, the ±LS will still become effective during a return-to-home operation.
*5 This parameter is used when an encoder is connected.

Setting range of "OUT signal mode selection" parameter

5: AREA 6: TIM 7: READY	8: WNG 9: HOME-P 10: ZSG *	11: R-OUT1 12: R-OUT2 13: STEPOUT *	14: O.H. 15: R-OUT3 16: R-OUT4

* This signal is used when an encoder is connected.

3-3 Motor parameter

Parameter name	Setting range	Initial value
Operating current	5 to 100%	100
Standstill current	5 to 50%	50

Note

- Decrease the operating current and standstill current when there is an allowance in the motor torque and you wish to reduce vibration during operation or suppress heat generation from the motor. However, be careful of an excessive decrease in current, since the motor torque and holding brake force will drop in rough proportion to the operating current.
- The standstill current is the rated current (100%) multiplied by the standstill current ratio.

3-4 Speed parameter

Parameter name	Setting range	Initial value
Common acceleration rate	0.001 to 1,000.000 ms/kHz	30.000
Common deceleration rate		
Starting speed	1 to 500,000 Hz	100
JOG operating speed		1,000
JOG acceleration/deceleration rate	0.001 to 1,000.000 ms/kHz	30.000
JOG starting speed	1 to 500,000 Hz	100
Acceleration/deceleration type	0: Common 1: Separate	0

3-5 Return-to-home parameter

Parameter name	Setting range	Initial value
Home-seeking mode	0: 2 sensors 1: 3 sensors	1
Operating speed of home-seeking	1 to 500,000 Hz	1,000
Acceleration/deceleration rate of home-seeking	0.001 to 1,000.000 ms/kHz	30.000
Starting speed of home-seeking	1 to 500,000 Hz	100
Position offset of home-seeking	–8,388,608 to +8,388,607 step	0
Starting direction of home-seeking	0: Negative direction 1: Positive direction	1
SLIT detection with home-seeking	0: Disable 1: Enable	0
TIM signal detection with home-seeking	0: Disable 1: Enable (TIM) 2: Enable (ZSG) *	0
Backward steps in 2-sensor mode home-seeking	0 to 32,767 step	200

* This signal is used when an encoder is connected.

3-6 Alarm/warning parameter

Parameter name	Setting range	Initial value
Stepout detection band *	0.1 to 360.0 deg	7.2
Overvoltage warning	25.0 to 35.0 V	31.0
Overheat warning	40 to 85 °C	85

* This signal is used when an encoder is connected.

3-7 Common parameter

Parameter name	Setting range	Initial value
Software overtravel	0: Disable 1: Enable	1
Positive software limit	–8,388,608 to +8,388,607 step	8,388,607
Negative software limit		–8,388,608
Display mode of the data setter speed	0: Signed 1: Absolute	0
The data setter editing mode *1	0: Disable 1: Enable	1
Communication timeout action	0: Immediate stop 1: Decelerate stop	1
Receive period *2	0: Function disabled 0.01 to 9.99 sec.	0
Response interval *2	0 to 1,000 ms	50
Receive monitoring *2	0.01 to 9.99 sec.	0.10
Stepout detection action *2	0: No operation (alarm/warning not present) 1: Warning 2: Alarm	0

*1 Set this parameter when GW Protocol Version 1 is used.
*2 This parameter is used when an encoder is connected.

3-8 Communication parameter

Parameter name	Setting range	Initial value
Communication axis number	0 to 31	15
Communication protocol	0: Modbus RTU 1: GW Ver.1	0
Communication parity *	0: None 1: Even number 2: Odd number	1
Communication stop bit *	0: 1 bit 1: 2 bits	0
Transmission waiting time *	0 to 1,000.0 ms	10.0
Communication timeout *	0: Not monitored 1 to 10,000 ms	0
Communication error alarm	1 to 10 times	3

* Set this parameter when Modbus RTU Protocol is used.

3-9 Operation setting parameter

Parameter name	Setting range	Initial value
Motor rotation direction	0: +direction=CCW 1: +direction=CW	1
Stepout detection *	0: Disable 1: Enable	0
Motor step angle	See table next.	0
Encoder electronic gear A *	1 to 250,000	500
Encoder electronic gear B *		

* When an encoder is connected, this parameter is used in the misstep detection function. It does not affect the encoder counter value.

- **Setting value of the "Motor step angle" parameter**

If the base step angle of the motor is 0.72°

Setting	Step angle	Number of divisions
0	0.72°	1
1	0.36°	2
2	0.288°	2.5
3	0.18°	4
4	0.144°	5
5	0.09°	8
6	0.072°	10
7	0.036°	20
8	0.0288°	25
9	0.018°	40
10	0.0144°	50
11	0.009°	80
12	0.0072°	100
13	0.00576°	125
14	0.0036°	200
15	0.00288°	250

If the base step angle of the motor is 0.36°

Setting	Step angle	Number of divisions
0	0.36°	1
1	0.18°	2
2	0.144°	2.5
3	0.09°	4
4	0.072°	5
5	0.045°	8
6	0.036°	10
7	0.018°	20
8	0.0144°	25
9	0.009°	40
10	0.0072°	50
11	0.0045°	80
12	0.0036°	100
13	0.0028°	125
14	0.0018°	200
15	0.00144°	250

Note

- Step angles are theoretical values.
- With the geared type, the value of "step angle/gear ratio" becomes the actual step angle.
- The base step angle is 0.36° for high-resolution type motors.

4 Timing charts

■ Positioning operation

When the power is turned on and the STOP input is turned ON (normally closed), the READY output will turn ON and input of the START input signal will become possible.

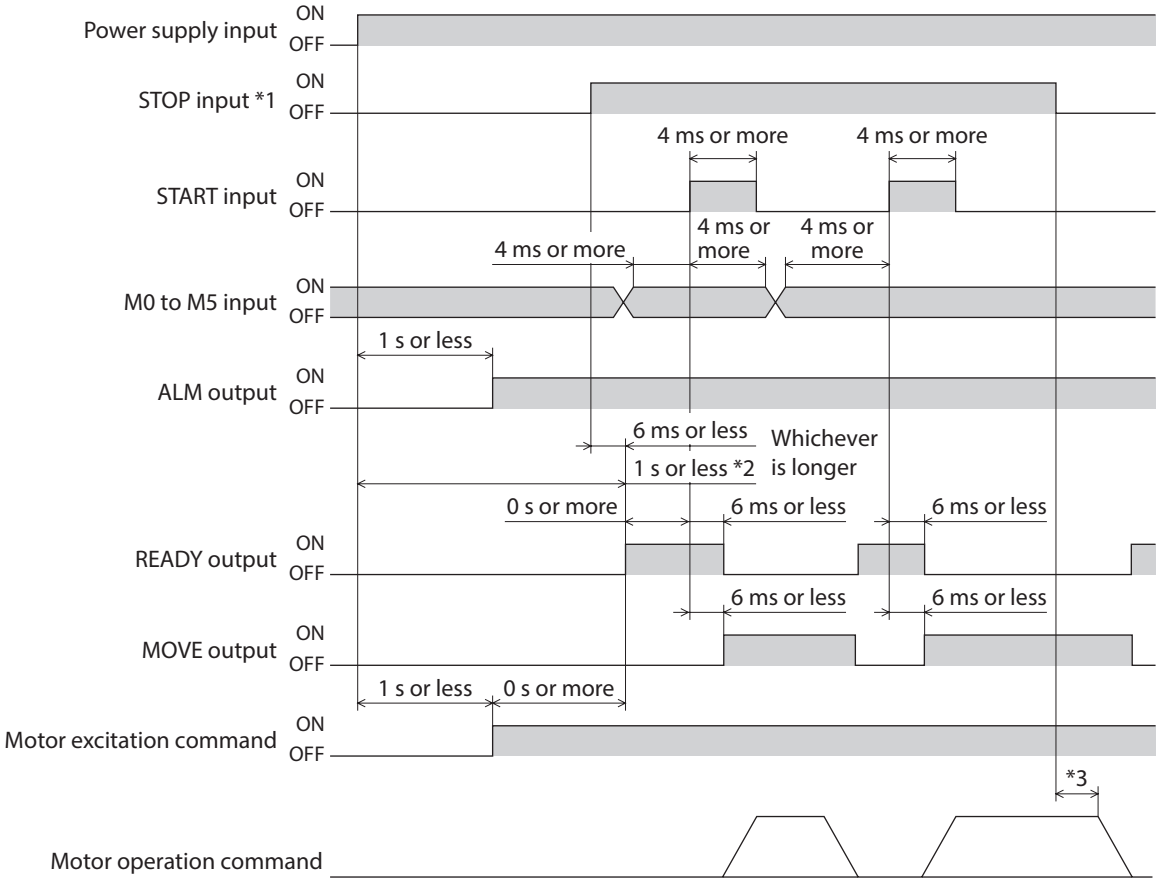

*1 When the STOP input logic is normally closed (factory setting).
*2 If the "Stepout detection" parameter is set to "enable," this period becomes 1.5 s or less.
*3 The specific time varies depending on the command speed.

■ Continuous operation

When the power is turned on and the STOP input is turned ON (normally closed), the READY output will turn ON and input of the FWD (RVS) input signal will become possible.

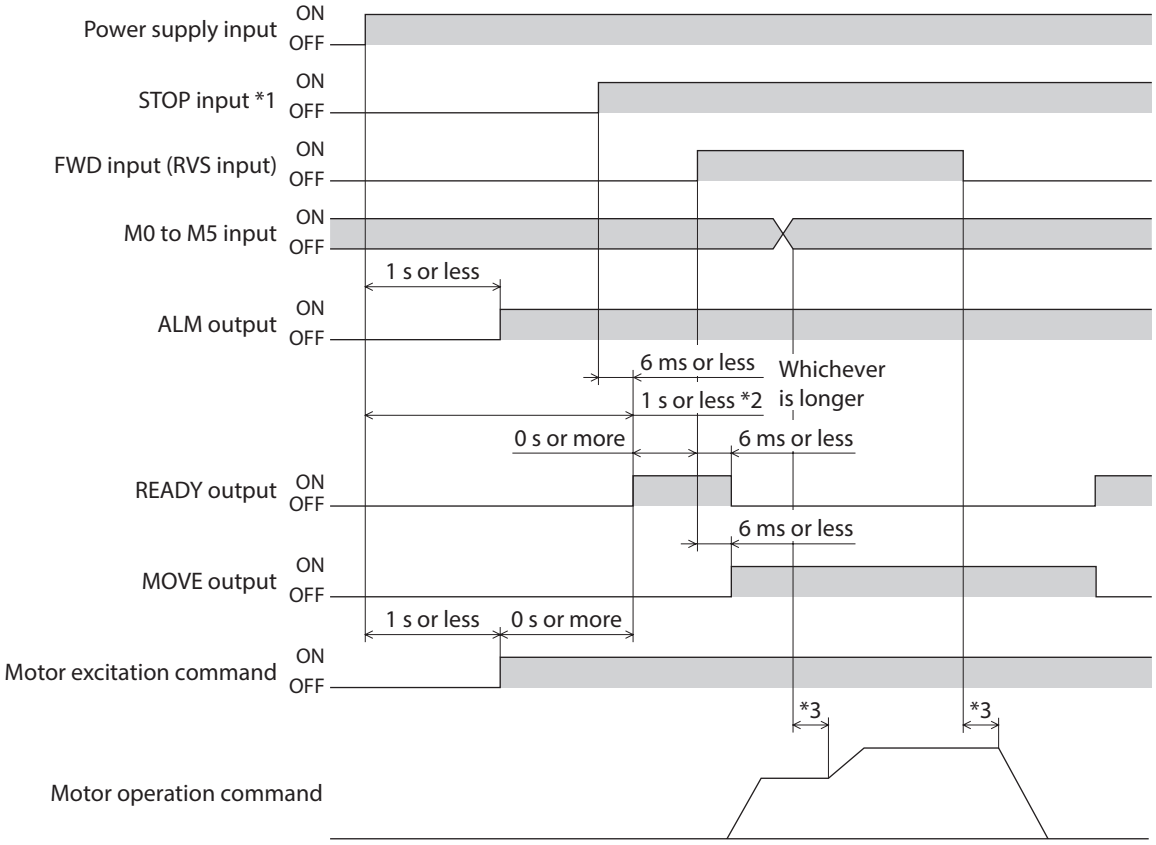

*1 When the STOP input logic is normally closed (factory setting).
*2 If the "Stepout detection" parameter is set to "enable," this period becomes 1.5 s or less.
*3 The specific time varies depending on the command speed.

5 Method of control via Modbus RTU (RS-485 communication)

This part explains how to control from the host controller via RS-485 communication. The protocol for the RS-485 communication is the Modbus protocol.

◆Table of contents

1 Guidance 106

2 Communication specifications 108

3 Setting the switches 109

4 Setting the RS-485 communication 111

5 Communication mode and communication timing 112

5-1 Communication mode 112
5-2 Communication timing 112

6 Message 113

6-1 Query 113
6-2 Response 115

7 Function code 117

7-1 Reading from a holding register(s) 117
7-2 Writing to a holding register 118
7-3 Diagnosis 118
7-4 Writing to multiple holding registers 119
7-5 Control method selection 120

8 Register address list 121

8-1 Register address types 121
8-2 Operation area 122
8-3 Maintenance area 125
8-4 Monitor area 126
8-5 Parameter area 128
8-6 Operation data area 131

9 Group send 133

10 Detection of communication errors 135

10-1 Communication errors 135
10-2 Alarms and warnings 135

11 Timing charts 136

12 Example of communication setting 138

12-1 Positioning operation 138
12-2 Continuous operation 140
12-3 Return-to-home operation 141

1 Guidance

The Modbus protocol is simple and its specification is open to the public, so this protocol is used widely in industrial applications.
Modbus communication is based on the single-client/multiple-server method. Only the client can issue a query (command). Each server executes the requested process and returns a response message.
If you are new to the **CRK** Series built-in controller type, read this section to understand the operating methods along with the operation flow.
This is an example how to operate the motor based on the operation data and parameters set to the driver by the host controller.

Note Before operating the motor, check the condition of the surrounding area to ensure safety.

STEP 1 Check the installation and connection

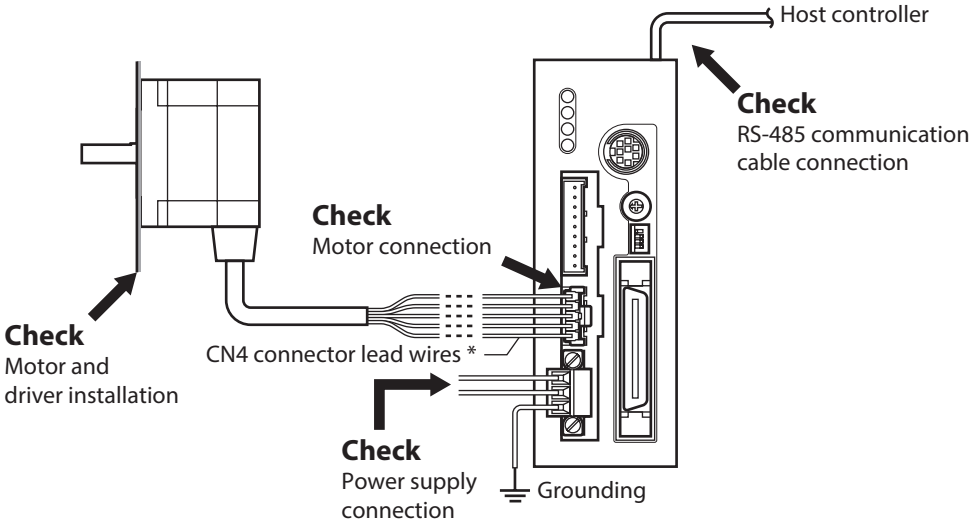

* Included item.

STEP 2 Set the switches

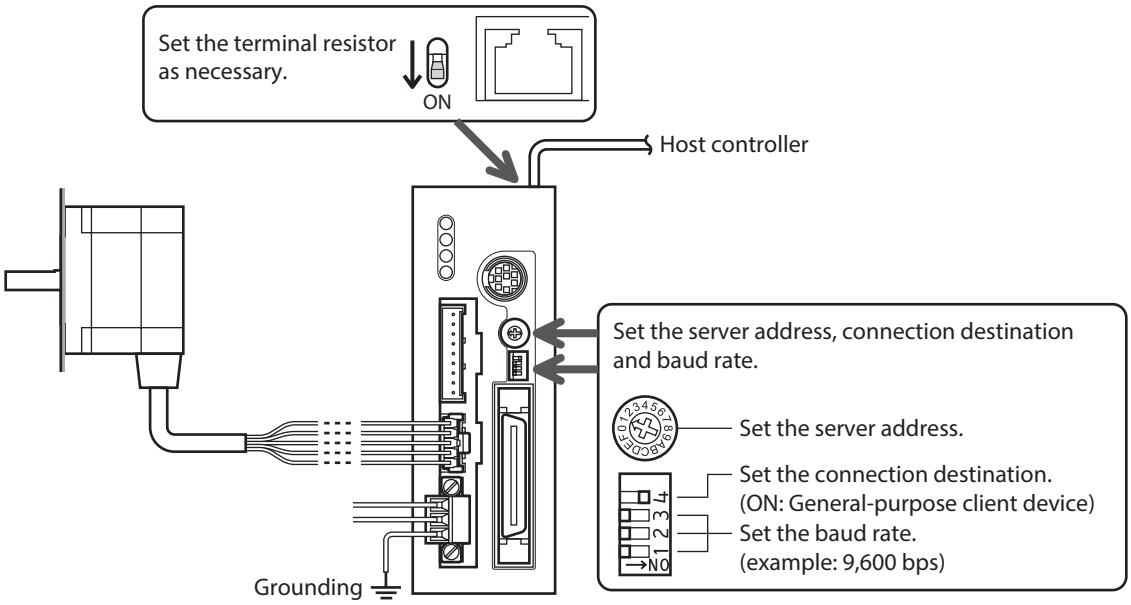

STEP 3 Turn on the power supply and set the parameters

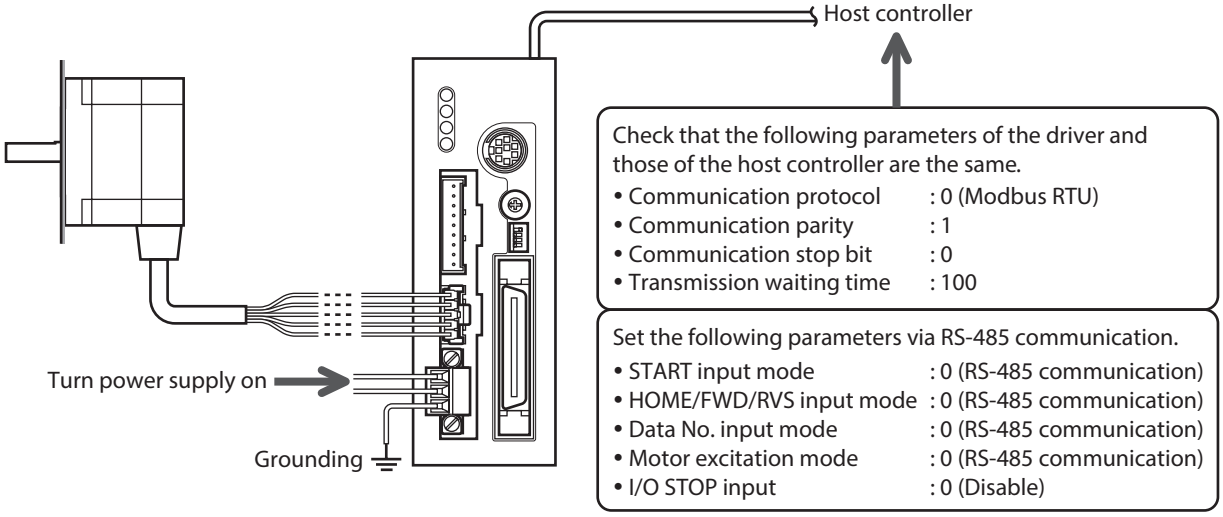

Check that the parameters of the driver and those of the host controller are the same.
Use the **MEXE02** or **OPX-2A** when changing the driver parameters.

STEP 4 Cycle the power

System parameters will become effective only after the power is cycled. If you have changed any of the system parameters, be sure to cycle the power.

STEP 5 Operate the motor

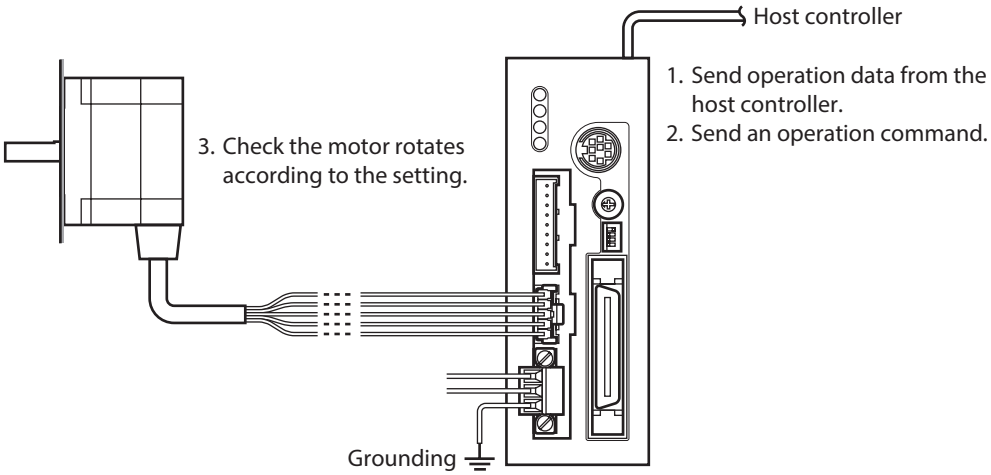

STEP 6 Were you able to operate the motor properly?

How did it go? Were you able to operate the motor properly? If the motor does not function, check the following points:

- Is any alarm present?
- Are the power supply, motor and RS-485 communication cable connected securely?
- Are the server address, baud rate and terminal resistor set correctly?
- Is the C-ERR LED lit?
- Is the C-DAT LED lit?

For more detailed settings and functions, refer to the following pages.

2 Communication specifications

Electrical characteristics	In conformance with EIA-485, straight cable Use a twisted pair cable (TIA/EIA-568B CAT5e or higher is recommended) and keep the total wiring distance including extension to 50 m (164 ft.) or less. *
Communication mode	Half duplex, Asynchronous mode (data: 8 bits, stop bit: 1 bit/2 bits, parity: none/even number/odd number)
Transmission rate	Selectable from 9,600 bps, 19,200 bps, 38,400 bps, 57,600 bps and 115,200 bps.
Protocol	Modbus RTU mode
Connection pattern	Up to 31 drivers can be connected to one host controller.

* If the motor cable or power supply cable generates an undesirable amount of noise depending on the wiring or configuration, shield the cable or install a ferrite core.

■ Connection example

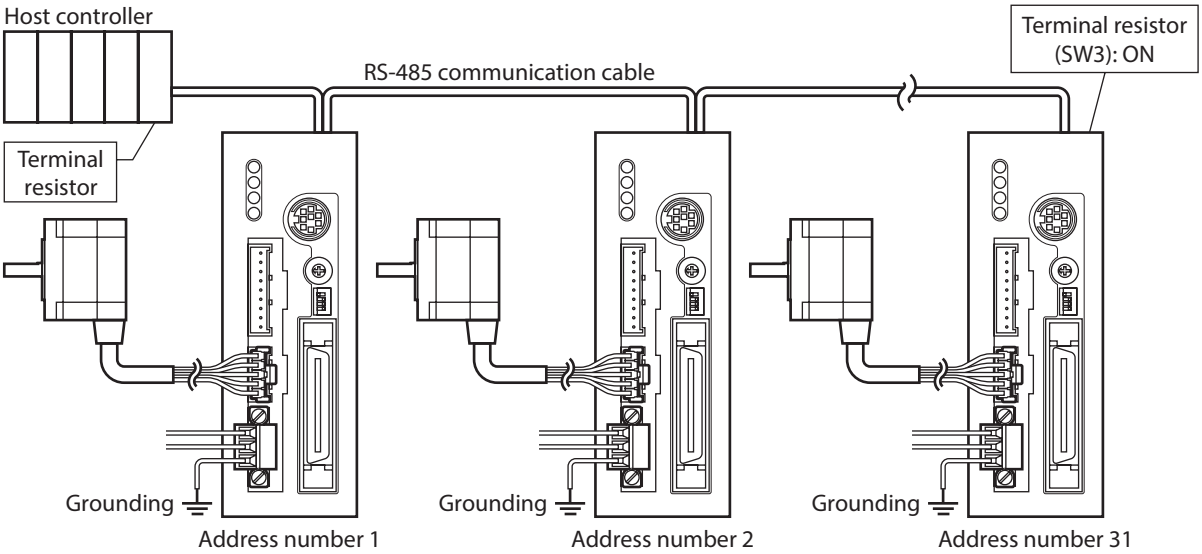

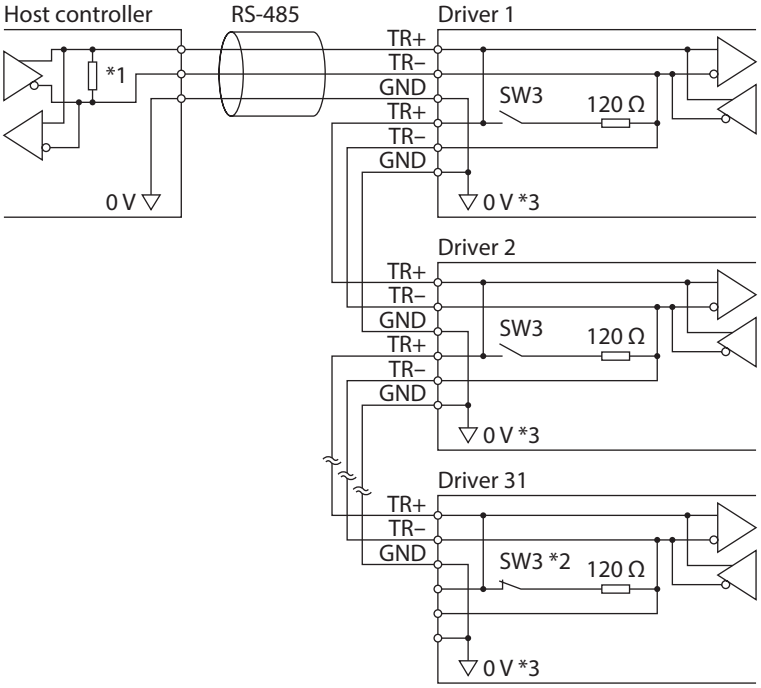

*1 Terminal resistor 120 Ω
*2 Turn the terminal resistor (SW3) to ON.
*3 The GND line is used in common with CN1 (not insulated).

3 Setting the switches

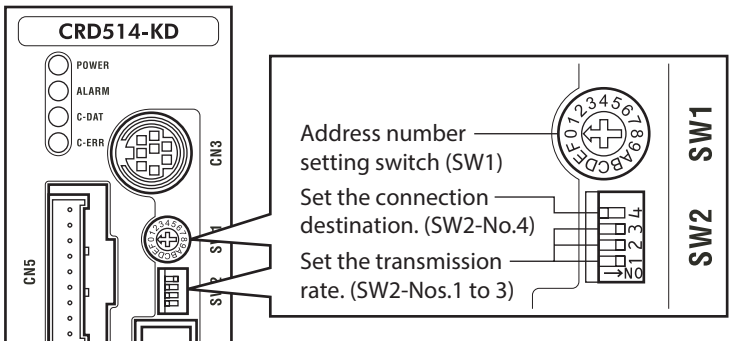

Note Be sure to turn off the driver power before setting the switches. If the switches are set while the power is still on, the new switch settings will not become effective until the driver power is cycled.

■ Address number (Server address)

Using the address number setting switch (SW1) and "Communication axis number" parameter, set the address number (server address).
If SW1 is set to "F," the address number (server address) set in the "Communication axis number" parameter is selected (initial value: 15).
Make sure each address number (server address) you set for each driver is unique. Address number (server address) 0 is reserved for broadcasting, so do not use this address.

Factory setting 0 (broadcast)

SW1	Address number (Server address)
0	Broadcast
1	1
2	2
3	3
4	4
5	5
6	6
7	7

SW1	Address number (Server address)
8	8
9	9
A	10
B	11
C	12
D	13
E	14
F	Setting value of "Communication axis number" parameter *

* The default value of the "Communication axis number" parameter is "15." Set the "Communication axis number" parameter using the **MEXE02** or **OPX-2**.

■ Setting the connection device

Set the SW2-No.4 of the function setting switch to ON. The Modbus protocol is selected.

Factory setting OFF

■ Baud rate

Using the Nos.1 to 3 of the function setting switch (SW2), set the baud rate.
The baud rate to be set should be the same as the baud rate of the host controller.

Factory setting All ON (625,000 bps)

Baud rate (bps)	SW2-No.3	SW2-No.2	SW2-No.1
9,600	OFF	OFF	OFF
19,200	OFF	OFF	**ON**
38,400	OFF	**ON**	OFF
57,600	OFF	**ON**	**ON**
115,200	**ON**	OFF	OFF

Note Make sure the baud rate does not exceed 115,200 bps. Also note that although switch combinations other than those specified above are also available, such other switch combinations cannot be used to communicate with the host controller. Accordingly, do not set the switches other than as specified above.

■ Termination resistor

Use a termination resistor for the driver located farthest away (positioned at the end) from the host controller.
Turn the terminal resistor setting switch (SW3) ON to set the terminal resistor for RS-485 communication (120 Ω).

Factory setting OFF (termination resistor disabled)

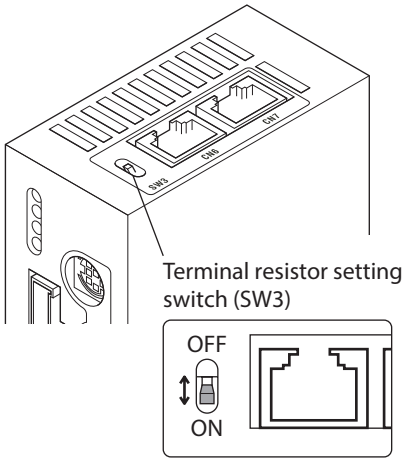

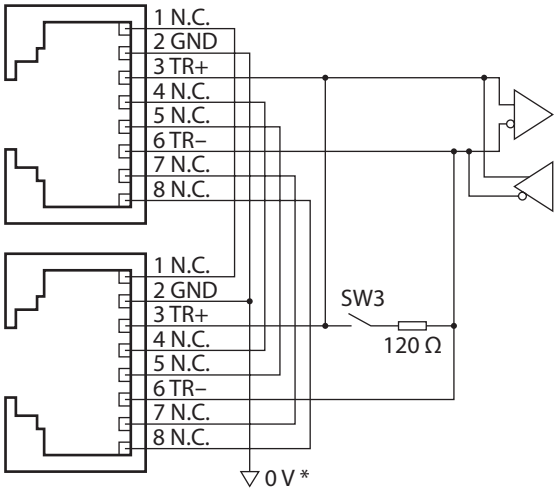

SW3	Termination resistor (120 Ω)
OFF	Disabled
ON	Enabled

* The GND line is used in common with CN1 (not insulated).

4 Setting the RS-485 communication

Set the following parameters using the **MEXE02**, **OPX-2A** or via RS-485 communication.

Parameter name	Setting range	Initial value	Description
Communication parity	0: None 1: Even number 2: Odd number	1	Sets the parity for RS-485 communication.
Communication stop bit	0: 1 bit 1: 2 bits	0	Sets the stop bit for RS-485 communication.
Transmission waiting time	0 to 1,000.0 ms	10.0	Sets the transmission waiting time for RS-485 communication.
Communication timeout	0 to 10,000 ms	0	Sets the condition in which a communication timeout occurs in RS-485 communication. It is not monitored when the set value is 0.
Communication error alarm	1 to 10 times	3	Sets the condition in which a RS-485 communication error alarm generates. A communication error alarm generates after a RS-485 communication error has occurred by the number of times set here.

5 Communication mode and communication timing

5-1 Communication mode

Modbus protocol communication is based on the single-client/multiple-server method.
Under this protocol, messages are sent in one of two methods.

- **Unicast mode**

The client sends a query to only one server. The server executes the process and returns a response.

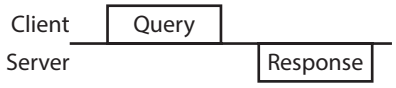

If server address 0 is specified on the client, the client can send a query to all servers. Each server executes the process, but does not return a response.

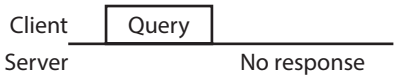

5-2 Communication timing

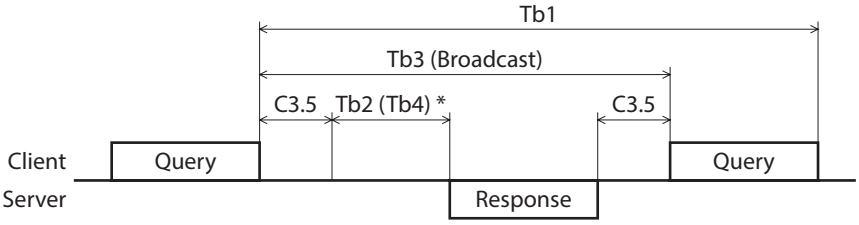

* If Tb2 (transmission waiting time) < Tb4 (processing time), a response is returned after Tb4+C3.5.

Character	Name	Description
Tb1	Communication timeout	Intervals between received messages are monitored. If no message could be received after the time set in the "Communication timeout" parameter, a communication timeout alarm generates.
Tb2	Transmission waiting time	The time after the server switches its communication line to the transmission mode upon receiving a query from the client, until it starts sending a response. Sets using the "Transmission waiting time" parameter. The actual transmission waiting time corresponds to the silent interval (C3.5) + transmission waiting time (Tb2).
Tb3	Broadcasting interval	The time until the next query is sent in broadcasting. A time equivalent to or longer than the silent interval (C3.5) plus 5 ms is required.
C3.5	Silent interval	Be sure to provide a waiting time of 3.5 characters or more. If this waiting time is less than 3.5 characters long, the driver cannot respond. See the following table for transmission waiting time.
Tb4	Processing time	The time to process a received message. The specific time varies depending on the length of the received message. The maximum processing time is 1.5 ms.

Transmission waiting time of the "silent interval (C3.5)"

Transmission rate (bps)	Transmission waiting time
9,600	4 ms or more
19,200 38,400 57,600 115,200	2.5 ms or more

6 Message

The message format is shown below.

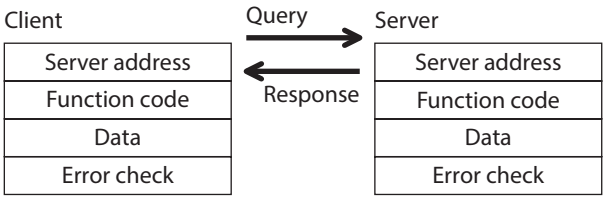

6-1 Query

The query message structure is shown below.

Server address	Function code	Data	Error check
8 bits	8 bits	N×8 bits	16 bits

■ Server address

Specify the server address (unicast mode).
If the server address is set to 0, the client can send a query to all servers (broadcast mode).

■ Function code

The function codes and message lengths supported by the **CRK** Series built-in controller type are as follows.

Function code	Description	Message length		Broadcast
		Query	Response	
03h	Read from a holding register(s).	8	7 to 25	Impossible
06h	Write to a holding register.	8	8	Possible
08h	Perform diagnosis.	8	8	Impossible
10h	Write to multiple holding registers.	11 to 29	8	Possible

■ Data

Set data associated with the selected function code. The specific data length varies depending on the function code.

■ Error check

In the Modbus RTU mode, error checks are based on the CRC-16 method. The server calculates a CRC-16 of each received message and compares the result against the error check value included in the message. If the calculated CRC-16 value matches the error check value, the server determines that the message is normal.

● CRC-16 calculation method

1. Calculate an exclusive-OR (XOR) value of the default value of FFFFh and server address (8 bits).
2. Shift the result of step 1 to the right by 1 bit. Repeat this shift until the overflow bit becomes "1."
3. Upon obtaining "1" as the overflow bit, calculate an XOR of the result of step 2 and A001h.
4. Repeat steps 2 and 3 until a shift is performed eight times.
5. Calculate an XOR of the result of step 4 and function code (8 bits).
   Repeat steps 2 to 4 for all bytes.
   The final result gives the result of CRC-16 calculation.

- **Example of CRC-16 calculation (server address: 02h, function code: 07h)**

The following table is a calculation example when setting the server address of the first byte to 02h and setting the function code of the second byte to 07h.
The result of actual CRC-16 calculation is calculated including the data on and after the third byte.

Description	Result	Overflow digit
Default value in CRC register FFFFh	1111 1111 1111 1111	–
First byte 02h	0000 0000 0000 0010	–
XOR with default value FFFFh	1111 1111 1111 1101	–
First shift to right	0111 1111 1111 1110	1
XOR with A001h	1010 0000 0000 0001 1101 1111 1111 1111	–
Second shift to right	0110 1111 1111 1111	1
XOR with A001h	1010 0000 0000 0001 1100 1111 1111 1110	–
Third shift to right	0110 0111 1111 1111	0
Fourth shift to right	0011 0011 1111 1111	1
XOR with A001h	1010 0000 0000 0001 1001 0011 1111 1110	–
Fifth shift to right	0100 1001 1111 1111	0
Sixth shift to right	0010 0100 1111 1111	1
XOR with A001h	1010 0000 0000 0001 1000 0100 1111 1110	–
Seventh shift to right	0100 0010 0111 1111	0
Eighth shift to right	0010 0001 0011 1111	1
XOR with A001h	1010 0000 0000 0001 1000 0001 0011 1110	–
XOR with next byte 07h	0000 0000 0000 0111 1000 0001 0011 1001	–
First shift to right	0100 0000 1001 1100	1
XOR with A001h	1010 0000 0000 0001 1110 0000 1001 1101	–
Second shift to right	0111 0000 0100 1110	1
XOR with A001h	1010 0000 0000 0001 1101 0000 0100 1111	–
Third shift to right	0110 1000 0010 0111	1
XOR with A001h	1010 0000 0000 0001 1100 1000 0010 0110	–
Fourth shift to right	0110 0100 0001 0011	0
Fifth shift to right	0011 0010 0000 1001	1
XOR with A001h	1010 0000 0000 0001 1001 0010 0000 1000	–
Sixth shift to right	0100 1001 0000 0100	0
Seventh shift to right	0010 0100 1000 0010	0
Eighth shift to right	0001 0010 0100 0001	0
Result of CRC-16	0001 0010 0100 0001	–

6-2 Response

Server-returned responses are classified into three types: normal response, no response, and exception response. The response message structure is the same as the command message structure.

Server address	Function code	Data	Error check
8 bits	8 bits	N×8 bits	16 bits

■ Normal response

Upon receiving a query from the client, the server executes the requested process and returns a response.

■ No response

The server may not return a response to a query sent by the client. This condition is referred to as "No response." The causes of no response are explained below.

● Transmission error

The server discards the query and does not return a response if any of the following transmission errors is detected.

Cause of transmission error	Description
Framing error	Stop bit 0 was detected.
Parity error	A mismatch with the specified parity was detected.
Mismatched CRC	The calculated value of CRC-16 was found not matching the error check value.
Invalid message length	The message length exceeded 256 bytes.

● Other than transmission error

A response may not be returned without any transmission error being detected.

Cause	Description
Broadcast	If the query was broadcast, the server executes the requested process but does not return a response.
Mismatched server address	The server address in the query was found not matching the server address of the driver.

■ Exception response

An exception response is returned if the server cannot execute the process requested by the query. Appended to this response is an exception code indicating why the process cannot be executed. The message structure of exception response is as follows.

Server address	Function code	Exception code	Error check
8 bits	8 bits	8 bits	16 bits

● Function code

The function code in the exception response is a sum of the function code in the query and 80h.
Example) query: 03h → Exception response: 83h

● Example of exception response

Client

Server address	01h
Function code	06h
Register address (upper)	02h
Register address (lower)	1Eh
Value written (upper)	FFh
Value written (lower)	FFh
Error check (lower)	E9h
Error check (upper)	C4h

Query →

← Response

Server

Server address	01h
Function code	86h
Data	03h
Error check (lower)	02h
Error check (upper)	61h

- **Exception code**

This code indicates why the process cannot be executed.

Exception code	Cause	Description
01h	Invalid function	The process could not be executed because the function code was invalid. · The function code is not supported. · The sub-function code for diagnosis (08h) is other than 00h.
02h	Invalid data address	The process could not be executed because the data address was invalid. · The address is not supported.
03h	Invalid data	The process could not be executed because the data was invalid. · The number of registers is 0. · The number of bytes is other than twice the number of registers. · The data is outside the specified range. · The data length is outside the specified range.
04h	Server error	● The process could not be executed because an error occurred at the server. ● User I/F communication in progress · Downloading or initialization is in progress using the **MEXE02** · The **OPX-2A** is currently connected in a mode other than the monitor mode. ● Non-volatile memory processing in progress · Internal processing was in progress. (S-BSY is ON.) · An EEPROM error alarm was present.

7 Function code

7-1 Reading from a holding register(s)

This function code is used to read a register (16 bits). Up to 10 successive registers (10×16 bits) can be read.
If two registers specifying the upper byte and lower byte (32 bits), respectively, constitute one value, then the two registers must be read simultaneously (example: position, operating speed). If not, an invalid value may be read.
If multiple holding registers are read, they are read in order of register addresses.

■ Example of read

Read operation data for positions Nos.1 and 2 of server address 1.

Description	Register address	Value read	Corresponding decimal
Operation data position No.1 (upper)	0402h	0000h	10,000
Operation data position No.1 (lower)	0403h	2710h	
Operation data position No.2 (upper)	0404h	FFFFh	–10,000
Operation data position No.2 (lower)	0405h	D8F0h	

Client → Query → Server

Client	
Server address	01h
Function code	03h
Register address (upper)	04h
Register address (lower)	02h
Number of registers (upper)	00h
Number of registers (lower)	04h
Error check (lower)	E4h
Error check (upper)	F9h

Register address to start reading from (0402h)

Number of registers to be read from the starting register address (4 registers=0004h)

Server → Response → Client

Server		
Server address	01h	
Function code	03h	
Number of data bytes	08h	Twice the number of registers in the query
Value read from register address (upper)	00h	Value read from register address 0402h
Value read from register address (lower)	00h	
Value read from register address+1 (upper)	27h	Value read from register address 0403h
Value read from register address+1 (lower)	10h	
Value read from register address+2 (upper)	FFh	Value read from register address 0404h
Value read from register address+2 (lower)	FFh	
Value read from register address+3 (upper)	D8h	Value read from register address 0405h
Value read from register address+3 (lower)	F0h	
Error check (lower)	08h	
Error check (upper)	A3h	

7-2 Writing to a holding register

This function code is used to write data to a specified register address.
If two registers specifying the upper byte and lower byte (32 bits), respectively, constitute one value, refer to "7-4 Writing to multiple holding registers" on p.119.

■ Example of write

Write 80 (50h) as operating current to server address 2.

Description	Resistor address	Value written	Corresponding decimal
Operating current	021Eh	50h	80

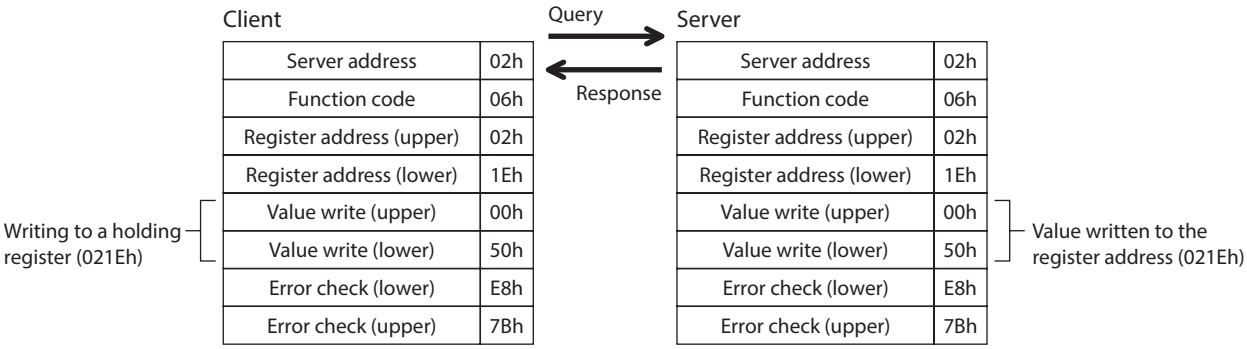

7-3 Diagnosis

This function code is used to diagnose the communication between the client and server. Arbitrary data is sent and the returned data is used to determine whether the communication is normal. 00h (reply to query) is the only sub-function supported by this function code.

■ Example of diagnosis

Send arbitrary data (1234h) to the server.

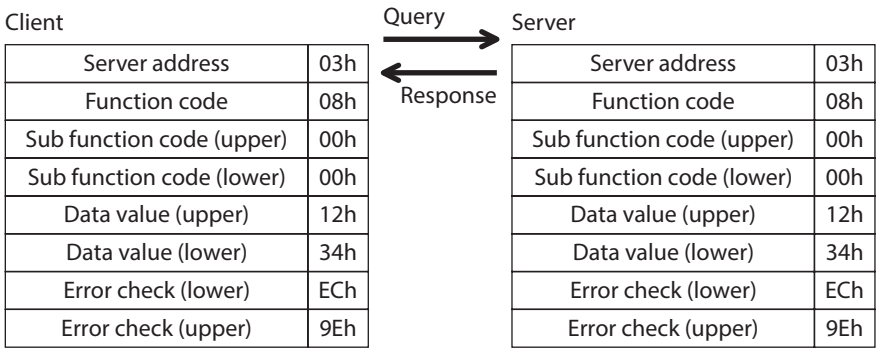

7-4 Writing to multiple holding registers

This function code is used to write data to multiple successive registers. Up to 10 registers can be written.
If two registers specifying the upper byte and lower byte (32 bits), respectively, constitute one value, then the two registers must be written simultaneously (example: position, operating speed). If not, an invalid value may be written.
Registers are written in the order of register addresses. Note that even when an exception response is returned because some data is invalid as being outside the specified range, etc., other data may have been written properly.

■ Example of write

Set the following data as acceleration rate Nos.2 to 4 as part of operation data at server address 4.

Description	Resistor address	Value written	Corresponding decimal
Operation data acceleration rate No.2 (upper)	0904h	0000h	10,000
Operation data acceleration rate No.2 (lower)	0905h	2710h	
Operation data acceleration rate No.3 (upper)	0906h	0000h	20,000
Operation data acceleration rate No.3 (lower)	0907h	4E20h	
Operation data acceleration rate No.4 (upper)	0908h	0007h	500,000
Operation data acceleration rate No.4 (lower)	0909h	A120h	

Client → Query → Server

	Client		Server	
	Server address	04h	Server address	04h
	Function code	10h	Function code	10h
Register address to start writing from (0904h)	Register address (upper)	09h	Register address (upper)	09h
	Register address (lower)	04h	Register address (lower)	04h
Number of registers to be written from the starting register address (6 registers=0006h)	Number of registers (upper)	00h	Number of registers (upper)	00h
	Number of registers (lower)	06h	Number of registers (lower)	06h
Twice the number of registers in the query	Number of data bytes	0Ch	Error check (lower)	02h
Value written to register address 0904h	Value written to register address (upper)	00h	Error check (upper)	03h
	Value written to register address (lower)	00h		
Value written to register address 0905h	Value written to register address+1 (upper)	27h		
	Value written to register address+1 (lower)	10h		
Value written to register address 0906h	Value written to register address+2 (upper)	00h		
	Value written to register address+2 (lower)	00h		
Value written to register address 0907h	Value written to register address+3 (upper)	4Eh		
	Value written to register address+3 (lower)	20h		
Value written to register address 0908h	Value written to register address+4 (upper)	00h		
	Value written to register address+4 (lower)	07h		
Value written to register address 0909h	Value written to register address+5 (upper)	A1h		
	Value written to register address+5 (lower)	20h		
	Error check (lower)	28h		
	Error check (upper)	5Ah		

Server → Response → Client

7-5 Control method selection

■ Communication setting

Using the **MEXE02** or **OPX-2A**, set the following parameters .

Parameter name	Setting range	Initial value	Description
Communication protocol	0: Modbus RTU 1: GW Ver.1.0	0	Sets the protocol for RS-485 communication. Set "0: Modbus RTU."
Communication parity	0: None 1: Even number 2: Odd number	1	Sets the parity for RS-485 communication.
Communication stop bit	0: 1 bit 1: 2 bits	0	Sets the stop bit for RS-485 communication.
Transmission waiting time	0 to 1,000.0 ms	10.0	Sets the transmission waiting time for RS-485 communication.

■ Selection from I/O control and RS-485 communication control

Prior to shipment, I/O control is set as the method to select the operation command input method or operation data number. To change this control method to RS-485 communication, change the applicable settings using the **MEXE02**, **OPX-2A** or via RS-485 communication.
The table next lists the items whose control can be switched between I/O and RS-485 communication. You can use both methods simultaneously, such as controlling the operation via RS-485 communication and inputting a stop signal via I/O.

Item	Method of control via I/O	Method of control via RS-485 communication	This command is used to change the control method.
Positioning operation	START input	START for command 1 (001Eh)	START input mode
Excitation control	AWO input	C-ON for command 1 (001Eh)	Motor excitation mode
Stop	STOP input	STOP for command 1 (001Eh) *	I/O STOP input
Select data No.	M0 to M5 input	M0 to M5 for command 1 (001Eh)	Data number input mode
Return-to-home operation	HOME input	HOME for command 1 (001Eh)	HOME/FWD/RVS input mode
Continuous operation (forward)	FWD input	FWD for command 1 (001Eh)	
Continuous operation (reverse)	RVS input	RVS for command 1 (001Eh)	
Reset alarm	ALM-RST input	Alarm reset (0040h)	None (both are always effective)
Position preset	P-PRESET input	Position preset (0048h)	

* STOP for command 1 (001Eh) is always effective. Even if the "I/O STOP input" parameter is set to "enable," operation still stop when STOP is input for command 1 (001Eh).

8 Register address list

Note Data set via RS-485 communication is written to the driver's RAM, but data in the RAM will be cleared once the power is turned off. To save the data set via RS-485 communication to the non-volatile memory, execute "Batch non-volatile memory write." Note that only operation data and parameters are saved to the non-volatile memory.

8-1 Register address types

- An attempt to read from an unused address or write-only register address in the following address range will return an invalid value.
- A value written to an unused address or read-only register address in the following address range will be ignored.

Address	Type	WRITE/ READ	Saving to non-volatile memory	Description
0000h to 003Fh	Operation	W/R *	Impossible	Specify operations.
0040h to 007Fh	Maintenance	W/R		Clear alarm or warning records or perform batch processing of the non-volatile memory.
0100h to 013Fh	Monitor	R		Monitor the command speed, command position, I/O status, etc.
0200h to 027Fh 0300h to 033Fh	Parameter	W/R	Possible	WRITE/READ parameter.
0400h to 047Fh 0500h to 057Fh 0600h to 063Fh 0700h to 073Fh 0800h to 083Fh 0900h to 097Fh 0A00h to 0A7Fh 0C00h to 0C3Fh	Operation data			WRITE/READ operation data.

* Including read-only areas.

Note
- An attempt to write operation data or parameters in the following condition may fail. Also, invalid values may be read if operation data or parameters are read in this condition:
  See "10-1 Communication errors" on p.135 for details
  · User interface communication in progress
  · Non-volatile memory processing in progress
- An attempt to clear the history or process the non-volatile memory in the following condition may fail. Note, however, that the non-volatile memory can still be initialized even when an EEPROM error alarm is present:
  See "10-1 Communication errors" on p.135 for details
  · User interface communication in progress
  · Non-volatile memory processing in progress

8-2 Operation area

Address	WRITE/READ	Name	Initial value
0012h	W/R	Dwell time for the selected data number	–
0013h		Sequential positioning for the selected data number	
0014h		Operating mode for the selected data number	
0015h		Positioning mode for the selected data number	
0016h		Deceleration rate for the selected data number (upper)	
0017h		Deceleration rate for the selected data number (lower)	
0018h		Acceleration rate for the selected data number (upper)	
0019h		Acceleration rate for the selected data number (lower)	
001Ah		Operating speed for the selected data number (upper)	
001Bh		Operating speed for the selected data number (lower)	
001Ch		Position for the selected data number (upper)	
001Dh		Position for the selected data number (lower)	
001Eh		Command 1	
001Fh		Command 2	
0020h	R	Status 1	
0021h		Status 2	
0030h	W/R	Group	–1

■ Operation data for the selected data number (0012h to 001Dh)

Operation data is read or written from/to the selected data number indirectly.
The actual area to be read or written in this operation is the area where the operation data is stored.

● **Example) Operation data No.2 is selected**

001Ch is written (read) in the exact same manner as 0404h is written (read).
001Dh is written (read) in the exact same manner as 0405h is written (read).

Address	WRITE/READ	Name
001Ch	W/R	Position for the operation data No.2 (upper)=0404h
001Dh		Position for the operation data No.2 (lower)=0405h

● **Example) Operation data No.3 is started after changing the original operating speed and position**

By "writing to multiple holding registers" at 001Ah to 001Fh, you can change the operating speed and position for operation data No.3 and start the operation with a single command. Select operation data No.3 and then send the following command.

Address	WRITE/READ	Name
001Ah	W/R	Operating speed for the operation data No.3 (upper)
001Bh		Operating speed for the operation data No.3 (lower)
001Ch		Position for the operation data No.3 (upper)
001Dh		Position for the operation data No.3 (lower)
001Eh		Command 1

■ Command 1 (001Eh)

Commands the server to perform an operation.

Byte	Bit7	Bit6	Bit5	Bit4	Bit3	Bit2	Bit1	Bit0
Upper	–	–	C-ON	STOP	HOME	RVS	FWD	START
Lower	–	–	M5	M4	M3	M2	M1	M0

Signal name	Description	Setting range	Initial value
M0 to M5	Specify the operation data number using six bits.	0 to 63: Operation data No.	0
START	Perform positioning operation.	0: No action 1: Start operation *1	0
FWD	Perform continuous operation in the forward direction.	0: Deceleration stop 1: Operation	0
RVS	Perform continuous operation in the reverse direction.		0
HOME	Perform return-to-home operation.	0: No action 1: Start operation *1	0
STOP	Stop the motor.	0: No action 1: Stop	0
C-ON	Switch the motor excitation setting (excited/not excited).	0: Motor is not excited *2 1: Motor is excited *2	0

*1 Operation starts at the ON edge from 0 to 1. Return the bit to "0" once the operation has started.
*2 When the "C-ON logic configuration" parameter is set to "0."

■ Command 2 (001Fh)

Commands the server to perform an operation.

Byte	Bit7	Bit6	Bit5	Bit4	Bit3	Bit2	Bit1	Bit0
Upper	–	–	–	–	–	–	–	–
Lower	–	–	–	–	R-OUT4	R-OUT3	R-OUT2	R-OUT1

Signal name	Description	Setting range	Initial value
R-OUT1 to R-OUT4	These signals set ON/OFF of R-OUT1 to R-OUT4 outputs.	0: OFF (photocoupler un-energized) 1: ON (photocoupler energized)	0

■ Status 1 (0020h)

Indicates the server condition.

Byte	Bit7	Bit6	Bit5	Bit4	Bit3	Bit2	Bit1	Bit0
Upper	AREA	–	READY	–	HOME-P	MOVE	STEPOUT	START_R
Lower	ALM	WNG	M5_R	M4_R	M3_R	M2_R	M1_R	M0_R

Signal name	Description	Range
M0_R to M5_R	Selected operation data number. *	0 to 63: Selected operation data number
WNG	A warning is present.	0: Warning not present 1: Warning present
ALM	An alarm is present.	0: Alarm not present 1: Alarm present
START_R	Indicates the status of START. *	0: START=OFF 1: START=ON
STEPOUT	The step deviation is abnormal.	0: Deviation error not present 1: Deviation error present
MOVE	Indicates the operating condition of the motor.	0: Motor stopped 1: Motor operating
HOME-P	Indicates that the motor is at home position. It can be used as a home-seeking completion signal.	0: Motor not positioned at home 1: Motor positioned at home (home-seeking completed)
READY	Indicates that the driver is ready.	0: Not ready 1: Ready
AREA	The motor output shaft is inside the specified range.	0: Outside area 1: Inside area

* START and M0 to M5 can be turned ON/OFF via I/O or RS-485 communication. If these signals are controlled via I/O, the I/O-controlled ON/OFF status is returned. If the signals are controlled via RS-485 communication, the RS-485-communication-controlled ON/OFF status is returned. I/O control is selected as the default prior to shipment.

■ Status 2 (0021h)

Indicates the server condition.

Byte	Bit7	Bit6	Bit5	Bit4	Bit3	Bit2	Bit1	Bit0
Upper	–	–	–	–	–	–	–	–
Lower	–	–	–	ZSG	TIM	O.H.	ENABLE	S-BSY

Signal name	Description	Read range
S-BSY	Indicates the internal processing condition as a result of RS-485 communication.	0: Internal processing not in progress 1: Internal processing in progress
ENABLE	Indicates the excitation condition of the motor.	0: Motor not excited 1: Motor excited
O.H.	Indicates whether or not an overheat warning is present.	0: Overheat warning not present 1: Overheat warning present
TIM	Indicates the excitation condition of the motor. "1" is read when the motor is at its excitation home.	0: TIM not being detected 1: TIM being detected
ZSG	Indicates the Z-phase condition of the encoder input.	0: ZSG not being detected 1: ZSG being detected

■ Group (0030h)

See p.133 for group details.

8-3 Maintenance area

All commands can be read and written (READ/WRITE).

Note

- It takes time to clear the history or read/write the non-volatile memory. The internal processing in-progress signal (S-BSY) remains ON while the processing is being executed. Do not issue maintenance commands while the internal processing is in progress.
- Do not issue maintenance commands while the motor is operating.
- Set "1" for maintenance data. Return it to "0" after the applicable operation is finished.

Address	Name	Description	Setting range
0040h	Reset alarm	Resets the alarms that are present.	0: Do not execute 1: Execute
0041h	Clear alarm records	Clear alarm records.	
0042h	Clear warning records	Clear warning records.	
0044h	Batch non-volatile memory read	Reads the operation data and parameters saved in the non-volatile memory, to the RAM. All operation data and parameters previously saved in the RAM are overwritten.	
0045h	Batch non-volatile memory write	Writes the operation data and parameters saved in the RAM to the non-volatile memory.	
0046h	All data initialization *2	Resets the operation data and parameters saved in the RAM and non-volatile memory, to their defaults.	
0048h	Preset position	Presets the command position as the value of the "Preset position" parameter.	
0049h	Clear communication error records	Clears the communication error records.	
004Ah	Preset encoder counter *1	Presets the encoder counter value as the value of the "Encoder counter preset value" parameter.	
004Bh	Clear counter	Clears the command position and encoder counter value to 0. Internal deviations of the driver are also cleared, so any deviation error, if present, is reset.	
004Ch	Operation data initialization	Resets the operation data saved in the RAM and non-volatile memory, to their defaults.	
004Dh	Application parameters initialization	Resets the application parameters saved in the RAM and non-volatile memory, to their defaults.	
004Eh	System parameters initialization *2	Resets the system parameters saved in the RAM and non-volatile memory, to their defaults	

*1 This resistor address is used when an encoder is connected.
*2 The communication axis number, communication protocol, communication parity, communication stop bit and transmission waiting time are not initialized.

8-4 Monitor area

All commands can be read (READ).

Address	Name	Description	Range
0100h	Present alarm	Monitors the present alarm code.	–
0101h	Alarm record 1	Check the alarm records 1 to 10.	
0102h	Alarm record 2		
0103h	Alarm record 3		
0104h	Alarm record 4		
0105h	Alarm record 5		
0106h	Alarm record 6		
0107h	Alarm record 7		
0108h	Alarm record 8		
0109h	Alarm record 9		
010Ah	Alarm record 10		
010Bh	Present warning	Monitors the present warning code.	
010Ch	Warning record 1	Check the warning records 1 to 10.	
010Dh	Warning record 2		
010Eh	Warning record 3		
010Fh	Warning record 4		
0110h	Warning record 5		
0111h	Warning record 6		
0112h	Warning record 7		
0113h	Warning record 8		
0114h	Warning record 9		
0115h	Warning record 10		
0116h	Present selected operation data number	Check the operation data number currently selected.	0 to 63
0117h	Present operation data number	Check the operation data number corresponding to the data used in the current positioning operation. This address is used in linked-motion operation and sequential operation. While the motor is stopped, the last used operation data number is indicated.	
0118h	Command position (upper)	Monitors the command position.	–2,147,483,648 to 2,147,483,647 step
0119h	Command position (lower)		
011Ch	Command speed (upper)	Monitors the current command speed.	–500,000 to +500,000 Hz +: Forward –: Reverse 0: Stop
011Dh	Command speed (lower)		
011Eh	Encoder counter (upper) *	Monitors the encoder counter value.	–2,147,483,648 to 2,147,483,647 step
011Fh	Encoder counter (lower) *		
0124h	Remaining dwell time	Indicates how much of the dwell time used in the linked-motion operation 2 remains.	0 to 50,000 (1=0.001 s)
0126h	I/O status (upper)	Monitor the each I/O signal (CN2) of the driver. (See "I/O status (0126h/0127h)" on p.127.)	0: OFF (photocoupler un-energized) 1: ON (photocoupler energized)
0127h	I/O status (lower)		
0128h	Communication error code	Indicates the last received communication error code.	–

Address	Name	Description	Range
0129h	Communication error code record 1	Check the communication error records 1 to 10 that have occurred in the past.	–
012Ah	Communication error code record 2		
012Bh	Communication error code record 3		
012Ch	Communication error code record 4		
012Dh	Communication error code record 5		
012Eh	Communication error code record 6		
012Fh	Communication error code record 7		
0130h	Communication error code record 8		
0131h	Communication error code record 9		
0132h	Communication error code record 10		
0133h	Driver status (upper)	Monitors the driver status (See "Driver status (0133h/0134h)."	0: OFF 1: ON
0134h	Driver status (lower)		

* This resistor address is used when an encoder is connected.

- **I/O status (0126h/0127h)**

Byte	Bit7	Bit6	Bit5	Bit4	Bit3	Bit2	Bit1	Bit0
3 (most significant bit)	–	–	OUT4	OUT3	OUT2	OUT1	ALM	MOVE
2	–	–	–	–	SLIT	HOMES	–LS	+LS
1	–	RVS	FWD	HOME/ P-PRESET	STOP	AWO	ALM-RST	START
0 (least significant bit)	–	–	M5	M4	M3	M2	M1	M0

- **Driver status (0133h/0134h)**

Byte	Bit7	Bit6	Bit5	Bit4	Bit3	Bit2	Bit1	Bit0
3 (most significant bit)	ALMCD							
2	ZSG	TIM	M5_R	M4_R	M3_R	M2_R	M1_R	M0_R
1	START_R	O.H.	HOMES	SLIT	–LS	+LS	STEPOUT	WNG
0 (least significant bit)	ENABLE	ALM	AREA	S-BSY	READY	HOME-P	0	MOVE

Signal name of driver status

Signal name	Description	Range
MOVE	Indicates the operating condition of the motor.	0: Motor stopped 1: Motor operating
HOME-P	Indicates that the motor is at home position. It can be used as a home-seeking completion signal.	0: Motor not positioned at home 1: Motor positioned at home (home-seeking completed)
READY	Indicates that the driver is ready.	0: Not ready 1: Ready
S-BSY	Indicates the internal processing condition as a result of RS-485 communication.	0: Internal processing not in progress 1: Internal processing in progress
AREA	The motor output shaft is inside the specified range.	0: Outside area 1: Inside area
ALM	An alarm is present.	0: Alarm not present 1: Alarm present
ENABLE	Indicates the excitation condition of the motor.	0: Motor not excited 1: Motor excited
WNG	A warning is present.	0: Warning not present 1: Warning present
STEPOUT	The deviation is abnormal.	0: Deviation error not present 1: Deviation error present

Signal name	Description	Range
+LS	Indicates the condition of the I/O +LS input.	0: OFF (photocoupler un-energized) 1: ON (photocoupler energized)
–LS	Indicates the condition of the I/O –LS input.	
SLIT	Indicates the condition of the I/O SLIT input.	
HOMES	Indicates the condition of the I/O HOMES input.	
O.H.	Indicates whether or not an overheat warning is present.	0: Overheat warning not present 1: Overheat warning present
START_R	Indicates the status of START. *	0: START=OFF 1: START=ON
TIM	Indicates the excitation condition of the motor. "1" is read when the motor is at its excitation home.	0: TIM not being detected 1: TIM being detected
ZSG	Indicates the Z-phase condition of the encoder input.	0: ZSG not being detected 1: ZSG being detected
M0_R to M5_R	Selected operation data number. *	0 to 63: Operation data number
ALMCD	Indicates the alarm code of the present alarm.	Alarm code

* START and M0 to M5 can be turned ON/OFF via I/O or RS-485 communication. If these signals are controlled via I/O, the I/O-controlled ON/OFF status is returned. If the signals are controlled via RS-485 communication, the RS-485-communication-controlled ON/OFF status is returned. I/O control is selected as the default prior to shipment.

8-5 Parameter area

All commands can be read and written (READ/WRITE).

■ Application parameters

Address	Name	Setting range	Initial value
0200h	START input mode	0: RS-485 communication 1: I/O	1
0201h	I/O STOP input	0: Disable 1: Enable	1
0202h	STOP action	0: Immediate stop 1: Decelerate stop 2: Immediate stop & Current OFF 3: Decelerate stop & Current OFF	1
0203h	STOP contact configuration	0: Make (N.O.) 1: Brake (N.C.)	1
0204h	C-ON logic configuration	0: 0=Not excited, 1=Excited 1: 0=Excited, 1=Not excited	0
0206h	OUT1 signal mode selection	See table on p.130.	5
0207h	OUT2 signal mode selection		7
0208h	OUT3 signal mode selection		8
0209h	OUT4 signal mode selection		9
020Ah	HOME/P-PRESET input switching	0: HOME 1: P-PRESET	0
020Bh	Motor excitation mode	0: RS-485 communication 1: I/O	1
020Ch	HOME/FWD/RVS input mode		
020Dh	Data No. input mode		
020Eh	AWO contact configuration	0: Make (N.O.) 1: Brake (N.C.)	0
020Fh	Hardware overtravel detection	0: Disable 1: Enable	1
0210h	LS contact configuration	0: Make (N.O.) 1: Brake (N.C.)	0
0211h	HOMES contact configuration		

Address	Name	Setting range	Initial value
0212h	SLIT contact configuration	0: Make (N.O.) 1: Brake (N.C.)	0
0213h	Overtravel action	0: Immediate stop 1: Decelerate stop	0
0214h	Preset position (upper)	–8,388,608 to +8,388,607 step	0
0215h	Preset position (lower)		
0216h	Area 1 (upper)		
0217h	Area 1 (lower)		
0218h	Area 2 (upper)		
0219h	Area 2 (lower)		
021Ch	Encoder counter preset value (upper)		
021Dh	Encoder counter preset value (lower)		
021Eh	Operating current	5 to 100%	100
021Fh	Standstill current	5 to 50%	50
0224h	Common acceleration rate (upper)	0.001 to 1,000.000 ms/kHz	30.000
0225h	Common acceleration rate (lower)		
0226h	Common deceleration rate (upper)		
0227h	Common deceleration rate (lower)		
0228h	Starting speed (upper)	1 to 500,000 Hz	100
0229h	Starting speed (lower)		
0230h	JOG operating speed (upper)		1,000
0231h	JOG operating speed (lower)		
0232h	JOG acceleration (deceleration) rate (upper)	0.001 to 1,000.000 ms/kHz	30.000
0233h	JOG acceleration (deceleration) rate (lower)		
0234h	JOG starting speed (upper)	1 to 500,000 Hz	100
0235h	JOG starting speed (lower)		
0236h	Acceleration (deceleration) rate type	0: Common 1: Separate	0
0237h	Home-seeking mode	0: 2 sensors 1: 3 sensors	1
023Ah	Operating speed of home-seeking (upper)	1 to 500,000 Hz	1,000
023Bh	Operating speed of home-seeking (lower)		
023Ch	Acceleration (deceleration) rate of home-seeking (upper)	0.001 to 1,000.000 ms/kHz	30.000
023Dh	Acceleration (deceleration) rate of home-seeking (lower)		
023Eh	Starting speed of home-seeking (upper)	1 to 500,000 Hz	100
023Fh	Starting speed of home-seeking (lower)		
0240h	Position offset of home-seeking (upper)	–8,388,608 to +8,388,607 step	0
0241h	Position offset of home-seeking (lower)		
0242h	Starting direction of home-seeking	0: Negative direction 1: Positive direction	1
0243h	SLIT detection with home-seeking	0: Disable 1: Enable	0
0244h	TIM signal detection with home-seeking	0: Disable 1: Enable (TIM) 2: Enable (ZSG) *	0
0245h	Backward steps in 2 sensor mode home-seeking	0 to 32,767 step	200
0246h	Stepout detection band *	1 to 3,600 (1=0.1 deg)	72
024Ah	Overvoltage warning	250 to 350 (1=0.1 V)	310
024Ch	Overheat warning	40 to 85 °C	85

Address	Name	Setting range	Initial value
0252h	Software overtravel	0: Disable 1: Enable	1
0254h	Positive software limit (upper)	−8,388,608 to +8,388,607 step	+8,388,607
0255h	Positive software limit (lower)		
0256h	Negative software limit (upper)		−8,388,608
0257h	Negative software limit (lower)		
0258h	Display mode of the data setter speed	0: Signed 1: Absolute	0
0259h	The data setter editing mode	0: Disable 1: Enable	1
025Bh	Communication timeout action	0: Immediate stop 1: Decelerate stop	1
025Ch	Stepout detection action *	0: No operation (alarm/warning not resent) 1: Warning 2: Alarm	0

* Indicates the parameter that is used when an encoder is connected.

Setting range of "OUT signal mode selection" parameter

5: AREA 6: TIM	7: READY 8: WNG	9: HOME-P 10: ZSG *	11: R-OUT1 12: R-OUT2	13: STEPOUT * 14: O.H.	15: R-OUT3 16: R-OUT4

* This signal is used when an encoder is connected.

■ System parameters

All commands can be read and written (READ/WRITE).

Note

- To make the new system parameter settings effective, execute "Batch non-volatile memory write" and then cycle the power.
- The communication axis number, communication parity, "Communication stop bit" and "Transmission waiting time" parameters relate to sending/receiving of data through communication. If these parameters are changed and the new settings become effective, communication may be disabled. Exercise due caution.

Address	Name	Setting range	Initial value
030Eh	Motor rotation direction	0: +direction=CCW 1: +direction=CW	1
0310h	Stepout detection *	0: Disable 1: Enable	0
0311h	Motor step angle	See table next.	0
0312h	Encoder electronic gear A (upper) *	1 to 250,000	500
0313h	Encoder electronic gear A (lower) *		
0314h	Encoder electronic gear B (upper) *		
0315h	Encoder electronic gear B (lower) *		
0316h	Communication axis number	0 to 31	15
0318h	Communication parity	0: None 1: Even number 2: Odd number	1
0319h	Communication stop bit	0: 1 bit 1: 2 bits	0
031Ah	Transmission waiting time	1 to 10,000 (1=0.1 ms)	100
031Bh	Communication timeout	0: Not monitored 1 to 10,000 ms	0
031Ch	Communication error alarm	1 to 10 times	3

* This parameter is used when an encoder is connected.

- **Setting value of the "Motor step angle" parameter**

If the base step angle of the motor is 0.72°

Setting	Step angle	Number of divisions
0	0.72°	1
1	0.36°	2
2	0.288°	2.5
3	0.18°	4
4	0.144°	5
5	0.09°	8
6	0.072°	10
7	0.036°	20
8	0.0288°	25
9	0.018°	40
10	0.0144°	50
11	0.009°	80
12	0.0072°	100
13	0.00576°	125
14	0.0036°	200
15	0.00288°	250

If the base step angle of the motor is 0.36°

Setting	Step angle	Number of divisions
0	0.36°	1
1	0.18°	2
2	0.144°	2.5
3	0.09°	4
4	0.072°	5
5	0.045°	8
6	0.036°	10
7	0.018°	20
8	0.0144°	25
9	0.009°	40
10	0.0072°	50
11	0.0045°	80
12	0.0036°	100
13	0.0028°	125
14	0.0018°	200
15	0.00144°	250

Note

- Step angles are theoretical values.
- With the geared type, the value of "step angle/gear ratio" becomes the actual step angle.
- The base step angle is 0.36° for high-resolution type motors.

8-6 Operation data area

All commands can be read and written (READ/WRITE).

Address	Name	Setting range	Initial value
0402h 0403h to 047Eh 047Fh	Position No.1 (upper) Position No.1 (lower) to Position No.63 (upper) Position No.63 (lower)	–8,388,608 to 8,388,607 step	0
0502h 0503h to 057Eh 057Fh	Operating speed No.1 (upper) Operating speed No.1 (lower) to Operating speed No.63 (upper) Operating speed No.63 (lower)	1 to 500,000 Hz	1,000
0601h to 063Fh	Positioning mode No.1 to Positioning mode No.63	0: Incremental 1: Absolute	0
0701h to 073Fh	Operating mode No.1 to Operating mode No.63	0: Single-motion 1: Linked-motion 2: Linked-motion 2	0
0801h to 083Fh	Sequential positioning No.1 to Sequential positioning No.63	0: Disable 1: Enable	0
0902h 0903h to 097Eh 097Fh	Acceleration rate No.1 (upper) Acceleration rate No.1 (lower) to Acceleration rate No.63 (upper) Acceleration rate No.63 (lower)	0.001 to 1,000.000 ms/kHz	30.000

Address	Name	Setting range	Initial value
0A02h 0A03h to 0A7Eh 0A7Fh	Deceleration rate No.1 (upper) Deceleration rate No.1 (lower) to Deceleration rate No.63 (upper) Deceleration rate No.63 (lower)	0.001 to 1,000.000 ms/kHz	30.000
0C01h to 0C3Fh	Dwell time No.1 to Dwell time No.63	0 to 50,000 (1=0.001 s)	0

9 Group send

Multiple servers are made into a group and a command is sent to all servers in the group at once.

■ Group composition

A group consists of one parent server and child servers and only the parent server returns a response.

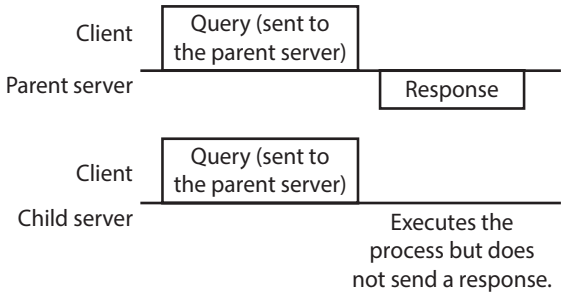

● Group address

To perform a group send, set a group address to the child servers to be included in the group.
The child servers to which the group address has been set can receive a query sent to the parent server.

● Parent server

No special setting is required on the parent server to perform a group send. The address of the parent server becomes the group address. When a command is sent to the parent server from the client, the parent server executes the requested process and then returns a response (same with the unicast mode).

● Child server

Use a "Group" command to set a group address to each child server.
Change the group in the unicast mode.

Address	Setting range	Initial value
0030h	−1: No group specification (Group send is not performed) 1 to 31: Sets a group address.	−1

■ Function code supporting the group send

Function code	Description
10h	Write to multiple holding registers.

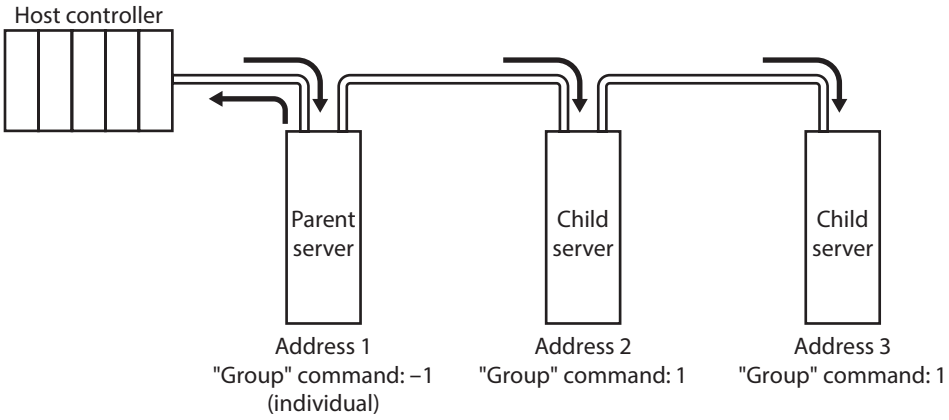

Group send

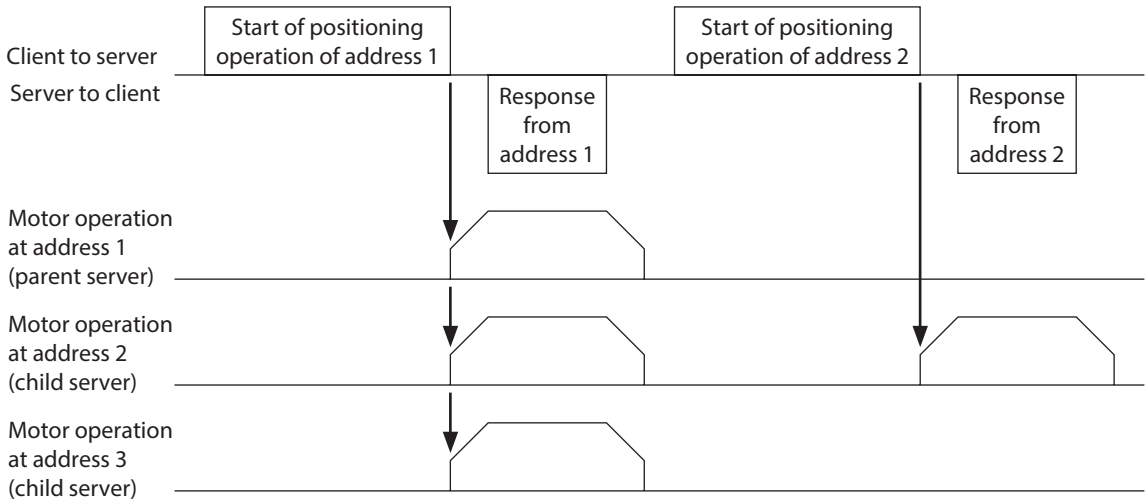
Client to server
Server to client
Start of positioning operation of address 1
Start of positioning operation of address 2
Response from address 1
Response from address 2
Motor operation at address 1 (parent server)
Motor operation at address 2 (child server)
Motor operation at address 3 (child server)

10 Detection of communication errors

This function detects abnormalities that may occur during RS-485 communication. The abnormalities that can be detected include communication errors, alarms and warnings.

10-1 Communication errors

A communication error record will be saved in the RAM. You can check the communication errors using the **MEXE02** or "Communication error record" command via RS-485 communication.

Note The communication error record will be cleared once the driver power is turned off.

Type of communication error	Error code	Cause	Ref.
RS-485 communication error	84h	A transmission error was detected.	p.115
Command not yet defined	88h	An exception response (exception code 01h, 02h) was detected.	p.116
User interface communication in progress	89h	An exception response (exception code 04h) was detected.	
Non-volatile memory processing in progress	8Ah		
Outside setting range	8Ch	An exception response (exception code 03h) was detected.	

10-2 Alarms and warnings

When an alarm generates, the ALM output will turn OFF and the motor will stop. At the same time, the ALARM LED will start blinking.
When a warning generates, the WNG output will turn ON. The motor will continue to operate.
Once the cause of the warning is removed, the WNG output will turn OFF automatically.

Note You can also clear the warning records by turning off the driver power.

■ RS-485 communication error (84h)

The table shows the relationship between alarms and warnings when an RS-485 communication error occurs.

Description of error	Description
Warning	A warning generates when one RS-485 communication error (84h) has been detected. If normal reception occurs while the warning is present, the warning will be reset automatically.
Alarm	An alarm generates when a RS-485 communication error (84h) has been detected consecutively by the number of times set in the "Communication error alarm" parameter. While the alarm is present, RS-485 communication is cut off and the motor becomes unexcited.

■ RS-485 communication timeout (85h)

If communication is not established with the client after an elapse of the time set by the "Communication timeout" parameter, a RS-485 communication timeout alarm will generate. The motor stopping method can be set using the "Communication timeout action" parameter.

11 Timing charts

■ Communication start

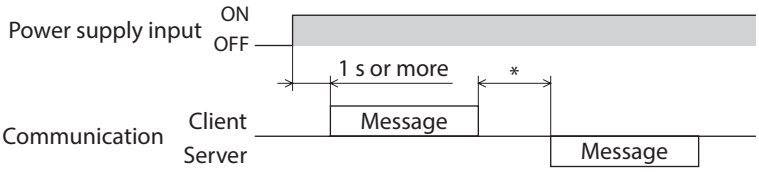

* Tb2 (transmission waiting time)+C3.5 (silent interval)
  Tb4 (processing time)+C3.5 (silent interval) if Tb2 < Tb4

■ Operation start

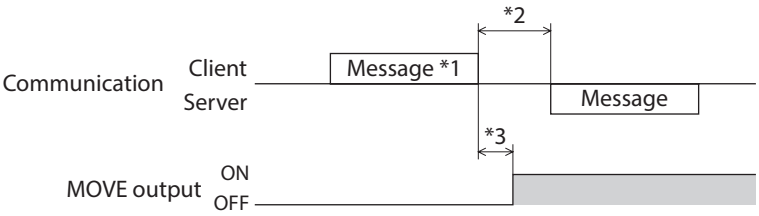

*1 A message including a command to start operation via RS-485 communication.
*2 Tb2 (transmission waiting time)+C3.5 (silent interval)
Tb4 (processing time)+C3.5 (silent interval) if Tb2 < Tb4
*3 C3.5 (silent interval)+4 ms or less

■ Operation stop, speed change

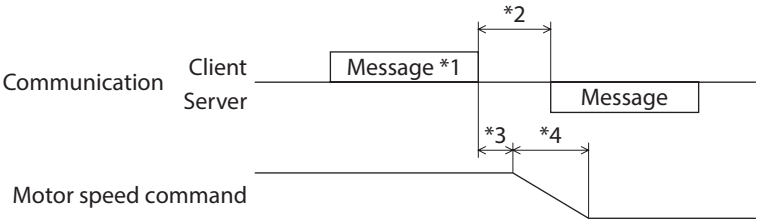

*1 A message including a command to start operation and another to change the speed via RS-485 communication.
*2 Tb2 (transmission waiting time)+C3.5 (silent interval)
Tb4 (processing time)+C3.5 (silent interval) if Tb2 < Tb4
*3 The specific time varies depending on the command speed.
*4 The specified time varies according to the value set by the "STOP action" parameter.

■ Excitation control

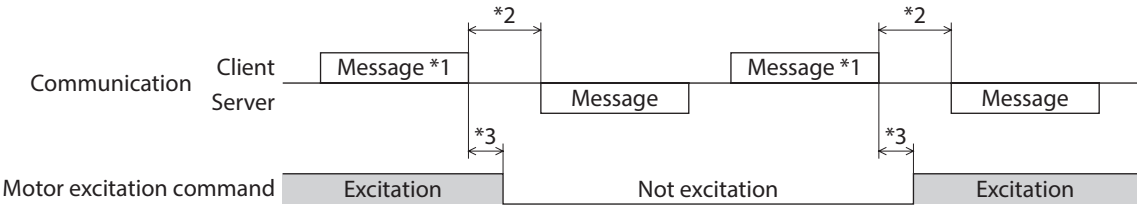

*1 A message including a command for excitation control via RS-485 communication.
*2 Tb2 (transmission waiting time)+C3.5 (silent interval)
Tb4 (processing time)+C3.5 (silent interval) if Tb2 < Tb4
*3 C3.5 (silent interval)+4 ms or less

■ Remote output

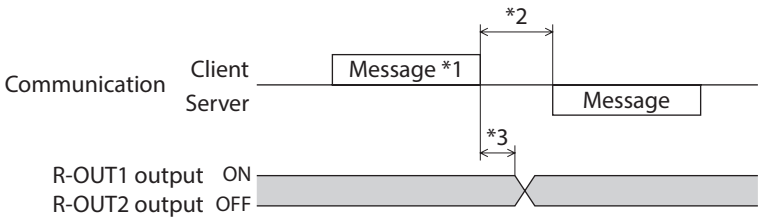

*1 A message including a command for remote output via RS-485 communication.
*2 Tb2 (transmission waiting time)+C3.5 (silent interval)
Tb4 (processing time)+C3.5 (silent interval) if Tb2 < Tb4
*3 C3.5 (silent interval)+4 ms or less

12 Example of communication setting

The data required for each operation is set using the **MEXE02**, **OPX-2A** or via RS-485 communication.

12-1 Positioning operation

See p.63 for details on the positioning operation. How to perform the following positioning operation is explained as an example.

- Server address: 1
- Position (distance): 1,000 step
- Operating speed: 5,000 Hz

1. Send the following query to turn ON the motor excitation.

Field name	Data	Description
Server address	01h	Server address 1
Function code	06h	Write to a holding register
Register address (upper)	00h	Command 1=001Eh
Register address (lower)	1Eh	
Value written (upper)	20h	Turn ON C-ON=2000h
Value written (lower)	00h	
Error check (lower)	F0h	Result of CRC-16=0CF0h
Error check (upper)	0Ch	

2. Send the following query to set the position (travel amount) for operation data No.1 to 1,000 steps.

Field name	Data	Description
Server address	01h	Server address 1
Function code	10h	Write to multiple holding registers.
Register address (upper)	04h	Position No.1=0402h
Register address (lower)	02h	
Number of registers (upper)	00h	Number of successive registers=2
Number of registers (lower)	02h	
Number of data bytes	04h	Total number of data bytes=4
Value written to register address (upper)	00h	1,000 step=0000 03E8h
Value written to register address (lower)	00h	
Value written to register address+1 (upper)	03h	
Value written to register address+1 (lower)	E8h	
Error check (lower)	40h	Result of CRC-16=0840h
Error check (upper)	08h	

3. Send the following query to set the operating speed for operation data No.1 to 5,000 Hz.

Field name	Data	Description
Server address	01h	Server address 1
Function code	10h	Write to multiple holding registers.
Register address (upper)	05h	Operating speed No.1=0502h
Register address (lower)	02h	
Number of registers (upper)	00h	Number of successive registers=2
Number of registers (lower)	02h	
Number of data bytes	04h	Total number of data bytes=4
Value written to register address (upper)	00h	5,000 Hz=0000 1388h
Value written to register address (lower)	00h	
Value written to register address+1 (upper)	13h	
Value written to register address+1 (lower)	88h	
Error check (lower)	40h	Result of CRC-16=7040h
Error check (upper)	70h	

4. Send the following query to select operation data No.1 and turn the START input ON (start operation). Position operation starts.

Field name	Data	Description
Server address	01h	Server address 1
Function code	06h	Write to holding register.
Register address (upper)	00h	Command 1=001Eh
Register address (lower)	1Eh	
Value written (upper)	21h	Turn ON C-ON, START and M0=2101h
Value written (lower)	01h	
Error check (lower)	30h	Result of CRC-16=5C30h
Error check (upper)	5Ch	

5. Once the positioning operation has started, send the following query to turn the START input OFF again (no operation).

Field name	Data	Description
Server address	01h	Server address 1
Function code	06h	Write to holding register.
Register address (upper)	00h	Command 1=001Eh
Register address (lower)	1Eh	
Value written (upper)	20h	Turn OFF START, Turn ON M0 and C-ON=2001h
Value written (lower)	01h	
Error check (lower)	31h	Result of CRC-16=CC31h
Error check (upper)	CCh	

12-2 Continuous operation

See p.77 for details on the continuous operation. How to perform the following continuous operation is explained as an example.

- Server address: 1
- Rotation direction: Forward
- Operating speed: 5,000 Hz

1. Send the following query to turn ON the motor excitation.

Field name	Data	Description
Server address	01h	Server address 1
Function code	06h	Write to a holding register
Register address (upper)	00h	Command 1=001Eh
Register address (lower)	1Eh	
Value written (upper)	20h	Turn ON C-ON =2000h
Value written (lower)	00h	
Error check (lower)	F0h	Result of CRC-16=0CF0h
Error check (upper)	0Ch	

2. Send the following query to set the operating speed for operation data No.1 to 5,000 Hz.

Field name	Data	Description
Server address	01h	Server address 1
Function code	10h	Write to multiple holding registers.
Register address (upper)	05h	Operating speed No.1=0502h
Register address (lower)	02h	
Number of registers (upper)	00h	Number of successive registers=2
Number of registers (lower)	02h	
Number of data bytes	04h	Total number of data bytes=4
Value written to register address (upper)	00h	5,000 Hz=0000 1388h
Value written to register address (lower)	00h	
Value written to register address+1 (upper)	13h	
Value written to register address+1 (lower)	88h	
Error check (lower)	40h	Result of CRC-16=7040h
Error check (upper)	70h	

3. Send the following query to select operation data No.1 and turn the FWD input ON (operation). Continuous operation starts.

Field name	Data	Description
Server address	01h	Server address 1
Function code	06h	Write to holding register.
Register address (upper)	00h	Command 1=001Eh
Register address (lower)	1Eh	
Value written (upper)	22h	Turn ON C-ON, FWD and M0=2201h
Value written (lower)	01h	
Error check (lower)	30h	Result of CRC-16=AC30h
Error check (upper)	ACh	

4. To stop the continuous operation, send the following query to turn the FWD input OFF again (deceleration stop).

Field name	Data	Description
Server address	01h	Server address 1
Function code	06h	Write to holding register.
Register address (upper)	00h	Command 1=001Eh
Register address (lower)	1Eh	
Value written (upper)	20h	Turn OFF FWD, Turn ON M0 and C-ON=2001h
Value written (lower)	01h	
Error check (lower)	31h	Result of CRC-16=CC31h
Error check (upper)	CCh	

12-3 Return-to-home operation

See p.72 for details on the return-to-home operation. How to perform the following return-to-home operation is explained as an example.

- Server address: 1

1. Send the following query to turn ON the motor excitation.

Field name	Data	Description
Server address	01h	Server address 1
Function code	06h	Write to a holding register
Register address (upper)	00h	Command 1=001Eh
Register address (lower)	1Eh	
Value written (upper)	20h	Turn ON C-ON=2000h
Value written (lower)	00h	
Error check (lower)	F0h	Result of CRC-16=0CF0h
Error check (upper)	0Ch	

2. Send the following query to turn the HOME input ON (start operation).
   Return-to-home operation starts.

Field name	Data	Description
Server address	01h	Server address 1
Function code	06h	Write to a holding register
Register address (upper)	00h	Command 1=001Eh
Register address (lower)	1Eh	
Value written (upper)	28h	Turn ON C-ON and HOME=2800h
Value written (lower)	00h	
Error check (lower)	F7h	Result of CRC-16=CCF7h
Error check (upper)	CCh	

3. Once the return-to-home operation has started, send the following query to turn the HOME input OFF again (no operation).

Field name	Data	Description
Server address	01h	Server address 1
Function code	06h	Write to holding register.
Register address (upper)	00h	Command 1=001Eh
Register address (lower)	1Eh	
Value written (upper)	20h	Turn OFF HOME, Turn ON C-ON=2000h
Value written (lower)	00h	
Error check (lower)	F0h	Result of CRC-16=0CF0h
Error check (upper)	0Ch	

6 Method of control via industrial network

This part explains how to control via industrial network. This product can be controlled via CC-Link communication or MECHATROLINK communication in combination with a network converter.

◆Table of contents

1 Method of control via CC-Link communication.....144

1-1 Guidance.....144
1-2 Setting the switches.....147
1-3 Remote register list.....148
1-4 Assignment for remote I/O of 6 axes connection mode.....148
1-5 Assignment for remote I/O of 12 axes connection mode.....151

2 Method of control via MECHATROLINK communication 156

2-1 Guidance.....156
2-2 Setting the switches.....159
2-3 I/O field map for the **NETC01-M2** 160
2-4 I/O field map for the **NETC01-M3** 161
2-5 Communication format.....162

3 Details of remote I/O.....164

3-1 Input signals to the driver 164
3-2 Output signals from the driver 164

4 Command code list 166

4-1 Group function.....166
4-2 Maintenance command.....167
4-3 Monitor command.....168
4-4 Operation data 170
4-5 Application parameter.....170
4-6 System parameter 172
4-7 Operation command.....173

1 Method of control via CC-Link communication

See the following explanation when using the **CRK** Series built-in controller type in combination with the network converter **NETC01-CC** via CC-Link communication.
Refer to "3 Details of remote I/O" on p.164 and "4 Command code list" on p.166 for remote I/O and command code.

1-1 Guidance

If you are new to the **CRK** Series built-in controller type, read this section to understand the operating methods along with the operation flow.

Note
- Before operating the motor, check the condition of the surrounding area to ensure safety.
- See the network converter **NETC01-CC** USER MANUAL for how to set the parameter.

STEP 1 Set the transmission rate, station address and address number.

■ Using the parameter

1. Set the "Connection (address number 0) (1D80h)" parameter of the **NETC01-CC** to "1: Enable."
2. Execute the "Batch non-volatile memory write (3E85h)" of the **NETC01-CC**.
3. Cycle the **NETC01-CC** power.

Note
- "Connection" parameters will be enabled after the power is cycled.
- The "Connection" parameters and "Batch non-volatile memory write" command can be executed using the **MEXE02** or **OPX-2A**.

■ Using the switches

Setting condition of driver
- Address number of the driver: 0
- RS-485 transmission rate: 625,000 bps
- SW2-No.4 of the function setting switch: OFF

Setting condition of NETC01-CC
- CC-Link station number: 1
- RS-485 transmission rate: 625,000 bps
- CC-Link baud rate: Same as the master station
- Operation mode: 6 axes connection mode

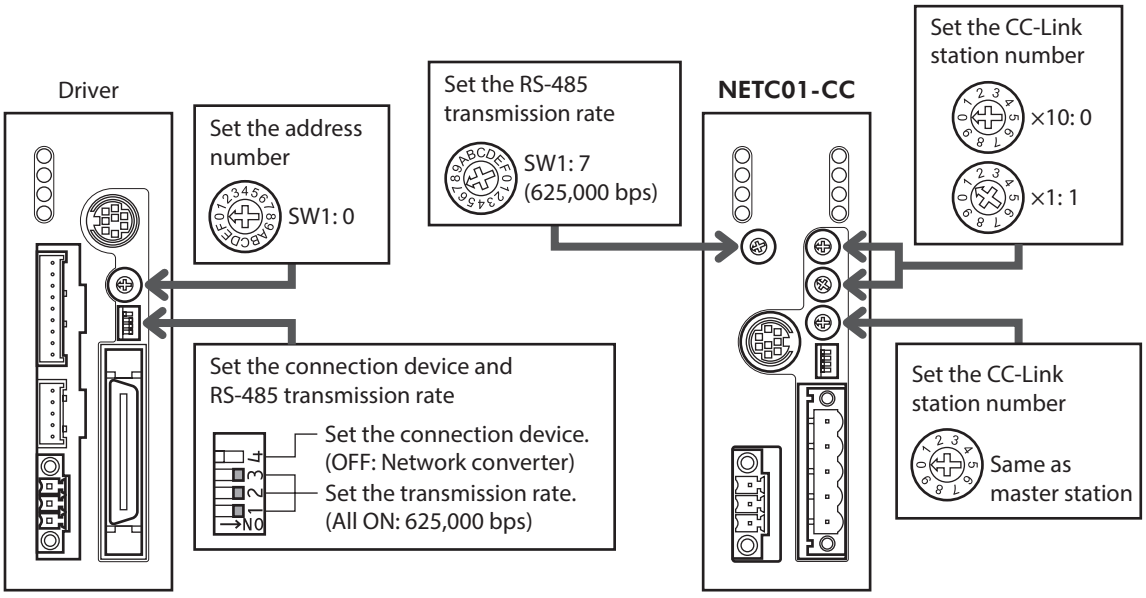

STEP 2 Check the connection and termination resistor

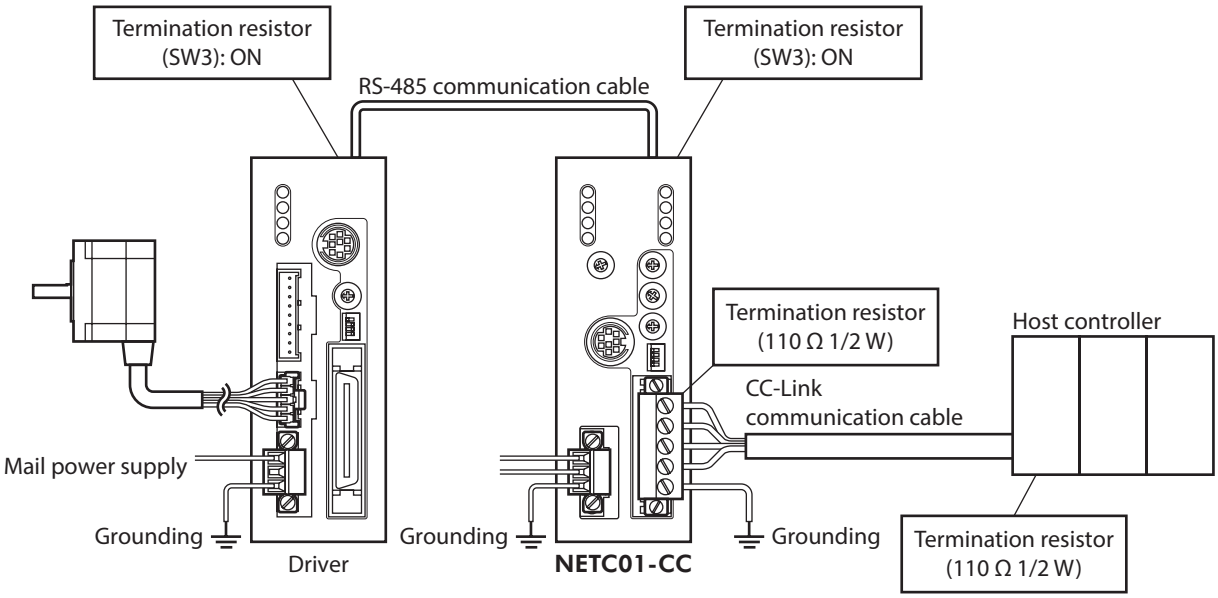

STEP 3 Turn on the power supply and check the setting

Check that the LED condition has become as shown in the figures.

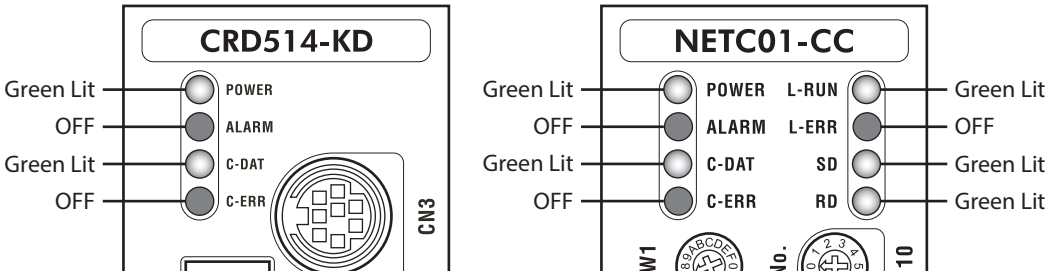

- **When C-ERR (red) of the driver or NETC01-CC is lit:**
  Check the transmission rate or address number of RS-485 communication.
- **When L-ERR (red) of the NETC01-CC is lit:**
  Check the type of the CC-Link communication error.

STEP 4 Set the driver parameters

1. Set the "START input mode (1C00h)" parameter of the driver to "0: RS-485 communication." (Initial value: I/O)
2. Set the "HOME/FWD/RVS input mode (1C0Ch)" parameter of the driver to "0: RS-485 communication." (Initial value: I/O)
3. Set the "Data No. input mode (1C0Dh)" parameter of the driver to "0: RS-485 communication." (Initial value: I/O)
4. Set the "STOP contact configuration (1C03h)" parameter of the driver to "0: make." (Initial value: brake)
5. Select operation data No.01 by turning ON the M0 of the address number 0 for remote I/O of CC-Link communication.
6. Perform continuous operation by turning ON the FWD of the address number 0 for remote I/O of CC-Link communication.

Note The parameters are written in the RAM when writing via CC-Link communication. The data saved in the RAM will be erased once the driver power is turned off. When saving data to the non-volatile memory, execute "Batch non-volatile memory write" of the maintenance command. Refer to p.167.

STEP 5 Execute continuous operation via remote I/O of CC-Link communication.

Perform continuous operation by turning ON the FWD of the address number 0 for remote I/O of CC-Link communication.

Command RY (Master station to **NETC01-CC**)		
Device No.	Signal name	Initial value
RY0	M0	Select the operation data No.
RY1	M1	
RY2	M2	
RY3	M3	
RY4	M4	
RY5	M5	
RY6	–	–
RY7		
RY8	START	Positioning operation
RY9	FWD	Continuous operation (positive direction)
RYA	RVS	Continuous operation (negative direction)
RYB	HOME	Return-to-home operation
RYC	STOP	Stop operation
RYD	C-ON	Motor excitation ON/OFF
RYE	–	–
RYF		

STEP 6 Were you able to operate the motor properly?

How did it go? Were you able to operate the motor properly? If the motor does not function, check the following points:

- Is any alarm present in the driver or **NETC01-CC**?
- Are the address number, transmission rate and termination resistor set correctly?
- Is the "Connection" parameter of the **NETC01-CC** set correctly?
- Is the C-ERR LED lit? (RS-485 communication error)
- Is the L-ERR LED lit? (CC-Link communication error)
- Is the operation data set correctly?
- Is the motor excited? Or is the excitation setting correct?
- Are the driver parameters set correctly?
- Is the STOP input of the driver I/O turned ON?

For more detailed settings and functions, refer to network converter **NETC01-CC** USER MANUAL and following pages.

1-2 Setting the switches

When using the driver in combination with the network converter, set the switches before use.

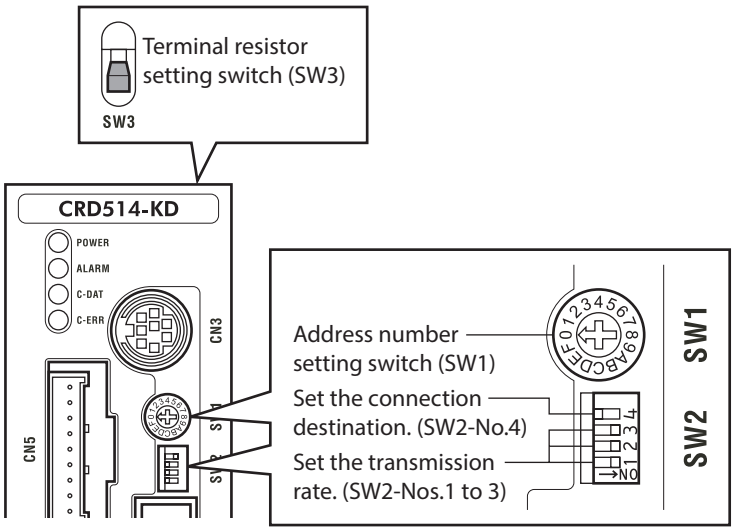

Note Be sure to turn off the motor power before setting the switches. If the switches are set while the power is still on, the new switch settings will not become effective until the driver power is cycled.

■ Setting the connection device

Using the function setting switch SW2-No.4, set the connection device of RS-485 communication.
Turn this switch OFF when controlling via the network converter.

Factory setting OFF (Network converter)

■ Address number (device address)

Using the address number setting switch (SW1), set the address number (device address). Make sure each address number (device address) you set for each driver is unique.

Factory setting 0

Address number (device address)	0	1	2	3	4	5	6	7	8	9	10	11
SW1	0	1	2	3	4	5	6	7	8	9	A	B
Connection mode	6 axes connection mode						12 axes connection mode					

■ Transmission rate

Turn Nos.1 to 3 of the function setting switch (SW2) ON to set the transmission rate to 625,000 bps.

Factory setting All ON (625,000 bps)

■ Termination resistor

Use a termination resistor for the driver located farthest away (positioned at the end) from the network converter.
Turn the terminal resistor setting switch (SW3) ON to set the terminal resistor for RS-485 communication (120 Ω).

Factory setting OFF (termination resistor disabled)

SW3	Termination resistor (120 Ω)
OFF	Disabled
ON	Enabled

1-3 Remote register list

Remote register is common to 6-axes connection mode and 12-axes connection mode.
"Monitor", "read and write of parameters" and "maintenance command" for the driver or **NETC01-CC** are executed using remote register.
"n" is an address assigned to the master station by the CC-Link station number setting.

RWw (Master station to **NETC01-CC**)	
Address No.	Description
RWwn0	Command code of monitor 0
RWwn1	Address number of monitor 0
RWwn2	Command code of monitor 1
RWwn3	Address number of monitor 1
RWwn4	Command code of monitor 2
RWwn5	Address number of monitor 2
RWwn6	Command code of monitor 3
RWwn7	Address number of monitor 3
RWwn8	Command code of monitor 4
RWwn9	Address number of monitor 4
RWwnA	Command code of monitor 5
RWwnB	Address number of monitor 5
RWwnC	Command code
RWwnD	Address number
RWwnE	Data (lower)
RWwnF	Data (upper)

RWr (**NETC01-CC** to master station)	
Address No.	Description
RWrn0	Data of monitor 0 (lower 16 bit)
RWrn1	Data of monitor 0 (upper 16 bit)
RWrn2	Data of monitor 1 (lower 16 bit)
RWrn3	Data of monitor 1 (upper 16 bit)
RWrn4	Data of monitor 2 (lower 16 bit)
RWrn5	Data of monitor 2 (upper 16 bit)
RWrn6	Data of monitor 3 (lower 16 bit)
RWrn7	Data of monitor 3 (upper 16 bit)
RWrn8	Data of monitor 4 (lower 16 bit)
RWrn9	Data of monitor 4 (upper 16 bit)
RWrnA	Data of monitor 5 (lower 16 bit)
RWrnB	Data of monitor 5 (upper 16 bit)
RWrnC	Command code response
RWrnD	Address number response
RWrnE	Data (lower)
RWrnF	Data (upper)

1-4 Assignment for remote I/O of 6 axes connection mode

Remote I/O assignments of the driver are as follows. "n" is an address assigned to the master station by the CC-Link station number setting. See the network converter **NETC01-CC** USER MANUAL for 6-axes.

■ Assignment list of remote I/O

Command RY (Master station to **NETC01-CC**)	
Device No.	Description
RYn7 to RYn0	Address number "0" remote I/O input
RYnF to RYn8	
RY (n+1) 7 to RY (n+1) 0	Address number "1" remote I/O input
RY (n+1) F to RY (n+1) 8	
RY (n+2) 7 to RY (n+2) 0	Address number "2" remote I/O input
RY (n+2) F to RY (n+2) 8	
RY (n+3) 7 to RY (n+3) 0	Address number "3" remote I/O input
RY (n+3) F to RY (n+3) 8	
RY (n+4) 7 to RY (n+4) 0	Address number "4" remote I/O input
RY (n+4) F to RY (n+4) 8	
RY (n+5) 7 to RY (n+5) 0	Address number "5" remote I/O input
RY (n+5) F to RY (n+5) 8	
RY (n+6) 7 to RY (n+6) 0	Control input of **NETC01-CC** *
RY (n+6) F to RY (n+6) 8	
RY (n+7) 7 to RY (n+7) 0	Control input of system area *
RY (n+7) F to RY (n+7) 8	

Response RX (**NETC01-CC** to master station)	
Device No.	Description
RXn7 to RXn0	Address number "0" remote I/O output
RXnF to RXn8	
RX (n+1) 7 to RX (n+1) 0	Address number "1" remote I/O output
RX (n+1) F to RX (n+1) 8	
RX (n+2) 7 to RX (n+2) 0	Address number "2" remote I/O output
RX (n+2) F to RX (n+2) 8	
RX (n+3) 7 to RX (n+3) 0	Address number "3" remote I/O output
RX (n+3) F to RX (n+3) 8	
RX (n+4) 7 to RX (n+4) 0	Address number "4" remote I/O output
RX (n+4) F to RX (n+4) 8	
RX (n+5) 7 to RX (n+5) 0	Address number "5" remote I/O output
RX (n+5) F to RX (n+5) 8	
RX (n+6) 7 to RX (n+6) 0	Status output of **NETC01-CC** *
RX (n+6) F to RX (n+6) 8	
RX (n+7) 7 to RX (n+7) 0	Status output of system area *
RX (n+7) F to RX (n+7) 8	

* See the network converter **NETC01-CC** USER MANUAL for details.

■ Input/output of remote I/O

● **Remote I/O input**

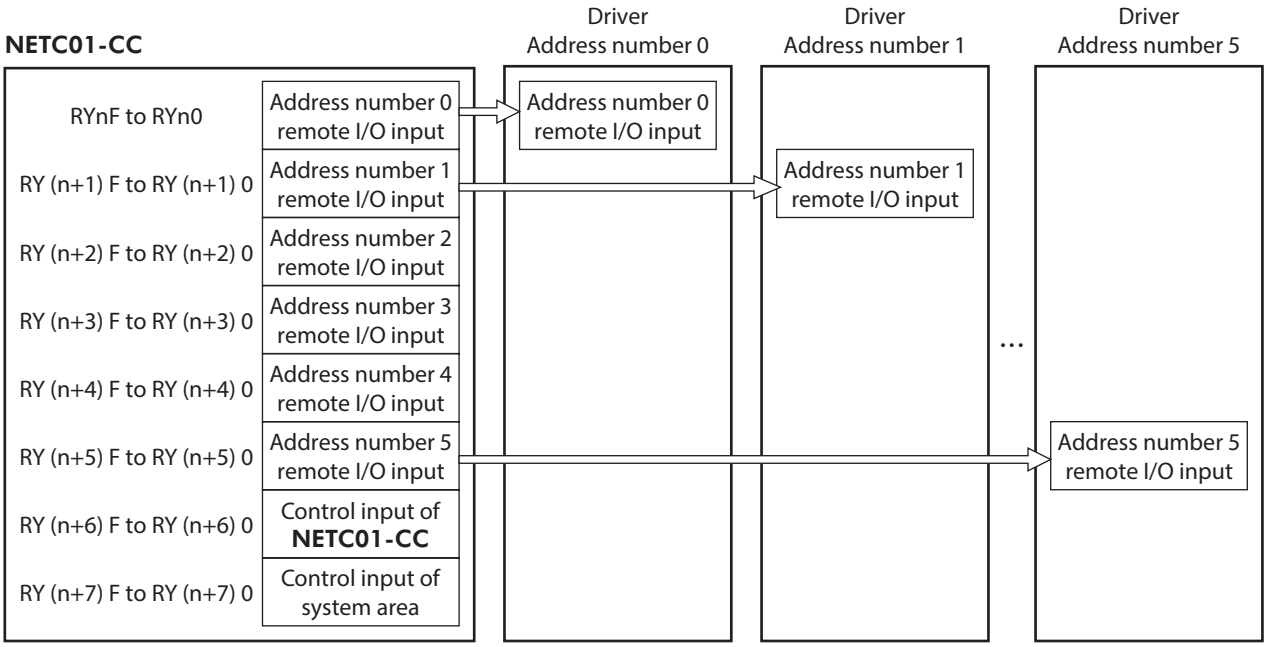

● **Remote I/O output**

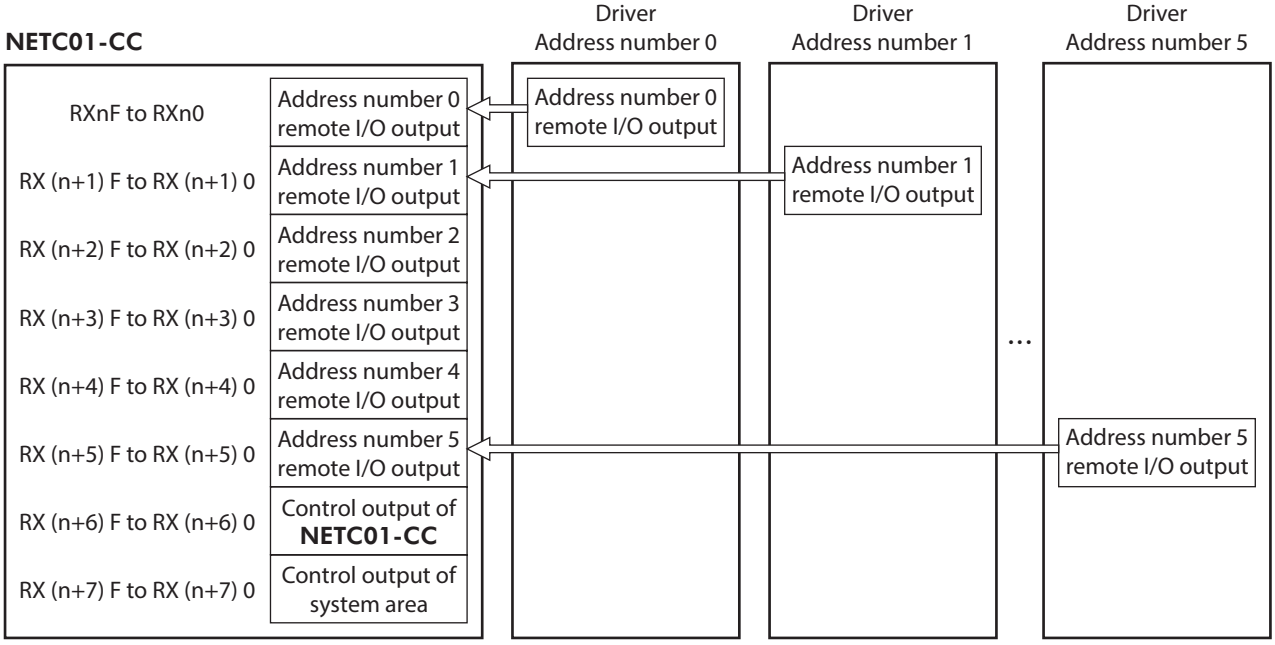

■ Details of remote I/O assignment

	Command RY (Master station to **NETC01-CC**)			Response RX (**NETC01-CC** to master station)		
	Device No.	Signal name	Description	Device No.	Signal name	Description
Address number "0"	RY (n) 0	M0	Select the operation data No.	RX (n) 0	M0_R	Response to the operation data No.
	RY (n) 1	M1		RX (n) 1	M1_R	
	RY (n) 2	M2		RX (n) 2	M2_R	
	RY (n) 3	M3		RX (n) 3	M3_R	
	RY (n) 4	M4		RX (n) 4	M4_R	
	RY (n) 5	M5		RX (n) 5	M5_R	
	RY (n) 6	–	–	RX (n) 6	WNG	Warning
	RY (n) 7			RX (n) 7	ALM	Alarm
	RY (n) 8	START	Positioning operation	RX (n) 8	START_R	Response to the positioning operation
	RY (n) 9	FWD	Continuous operation (positive direction)	RX (n) 9	STEPOUT	Misstep detection
	RY (n) A	RVS	Continuous operation (negative direction)	RX (n) A	MOVE	Operation is in progress
	RY (n) B	HOME	Return-to-home operation	RX (n) B	HOME-P	Return-to-home complete
	RY (n) C	STOP	Stop operation	RX (n) C	–	–
	RY (n) D	C-ON	Motor excitation ON/OFF	RX (n) D	READY	Ready
	RY (n) E	–	–	RX (n) E	–	–
	RY (n) F			RX (n) F	AREA	Area
Address number "1"	RY (n+1) 0 to RY (n+1) F	Same as Address number "0"		RX (n+1) 0 to RX (n+1) F	Same as Address number "0"	
Address number "2"	RY (n+2) 0 to RY (n+2) F			RX (n+2) 0 to RX (n+2) F		
Address number "3"	RY (n+3) 0 to RY (n+3) F			RX (n+3) 0 to RX (n+3) F		
Address number "4"	RY (n+4) 0 to RY (n+4) F			RX (n+4) 0 to RX (n+4) F		
Address number "5"	RY (n+5) 0 to RY (n+5) F			RX (n+5) 0 to RX (n+5) F		
NETC01-CC control input/status output	RY (n+6) 0	M-REQ0	Monitor request 0	RX (n+6) 0	M-DAT0	During execution of monitor 0
	RY (n+6) 1	M-REQ1	Monitor request 1	RX (n+6) 1	M-DAT1	During execution of monitor 1
	RY (n+6) 2	M-REQ2	Monitor request 2	RX (n+6) 2	M-DAT2	During execution of monitor 2
	RY (n+6) 3	M-REQ3	Monitor request 3	RX (n+6) 3	M-DAT3	During execution of monitor 3
	RY (n+6) 4	M-REQ4	Monitor request 4	RX (n+6) 4	M-DAT4	During execution of monitor 4
	RY (n+6) 5	M-REQ5	Monitor request 5	RX (n+6) 5	M-DAT5	During execution of monitor 5
	RY (n+6) 6	–	–	RX (n+6) 6	WNG	Warning

	Command RY (Master station to **NETC01-CC**)			Response RX (**NETC01-CC** to master station)		
	Device No.	Signal name	Description	Device No.	Signal name	Description
NETC01-CC control input/ status output	RY (n+6) 7	ARM-RST	Reset alarm	RX (n+6) 7	ALM	Alarm
	RY (n+6) 8	–	–	RX (n+6) 8	C-SUC	During execution of RS-485 communication
	RY (n+6) 9			RX (n+6) 9	–	–
	RY (n+6) A			RX (n+6) A		
	RY (n+6) B			RX (n+6) B		
	RY (n+6) C	D-REQ	Command execution request	RX (n+6) C	D-END	Command processing completion
	RY (n+6) D	–	–	RX (n+6) D	R-ERR	Register error
	RY (n+6) E			RX (n+6) E	S-BSY	During system processing
	RY (n+6) F			RX (n+6) F	–	–
System area control input/ status output	RY (n+7) 0 to RY (n+7) F	–	Cannot be used	RX (n+7) 0 to RX (n+7) A	–	Cannot be used
				RX (n+7) B	CRD	Remote station communication ready
				RX (n+7) C to RX (n+7) F	–	Cannot be used

1-5 Assignment for remote I/O of 12 axes connection mode

Remote I/O assignments of the driver are as follows. "n" is an address assigned to the master station by the CC-Link station number setting. See the network converter **NETC01-CC** USER MANUAL for 12-axes.

■ Assignment list of remote I/O

Command RY (Master station to **NETC01-CC**)		Response RX (**NETC01-CC** to master station)	
Device No.	Description	Device No.	Description
RYn7 to RYn0	Address number "0" remote I/O input	RXn7 to RXn0	Address number "0" remote I/O output
RYnF to RYn8	Address number "1" remote I/O input	RXnF to RXn8	Address number "1" remote I/O output
RY (n+1) 7 to RY (n+1) 0	Address number "2" remote I/O input	RX (n+1) 7 to RX (n+1) 0	Address number "2" remote I/O output
RY (n+1) F to RY (n+1) 8	Address number "3" remote I/O input	RX (n+1) F to RX (n+1) 8	Address number "3" remote I/O output
RY (n+2) 7 to RY (n+2) 0	Address number "4" remote I/O input	RX (n+2) 7 to RX (n+2) 0	Address number "4" remote I/O output
RY (n+2) F to RY (n+2) 8	Address number "5" remote I/O input	RX (n+2) F to RX (n+2) 8	Address number "5" remote I/O output
RY (n+3) 7 to RY (n+3) 0	Address number "6" remote I/O input	RX (n+3) 7 to RX (n+3) 0	Address number "6" remote I/O output
RY (n+3) F to RY (n+3) 8	Address number "7" remote I/O input	RX (n+3) F to RX (n+3) 8	Address number "7" remote I/O output
RY (n+4) 7 to RY (n+4) 0	Address number "8" remote I/O input	RX (n+4) 7 to RX (n+4) 0	Address number "8" remote I/O output
RY (n+4) F to RY (n+4) 8	Address number "9" remote I/O input	RX (n+4) F to RX (n+4) 8	Address number "9" remote I/O output
RY (n+5) 7 to RY (n+5) 0	Address number "10" remote I/O input	RX (n+5) 7 to RX (n+5) 0	Address number "10" remote I/O output

Command RY (Master station to **NETC01-CC**)	
Device No.	Description
RY (n+5) F to RY (n+5) 8	Address number "11" remote I/O input
RY (n+6) 7 to RY (n+6) 0	Control input of **NETC01-CC** *
RY (n+6) F to RY (n+6) 8	
RY (n+7) 7 to RY (n+7) 0	Control input of system area *
RY (n+7) F to RY (n+7) 8	

Response RX (**NETC01-CC** to master station)	
Device No.	Description
RX (n+5) F to RX (n+5) 8	Address number "11" remote I/O output
RX (n+6) 7 to RX (n+6) 0	Status output of **NETC01-CC** *
RX (n+6) F to RX (n+6) 8	
RX (n+7) 7 to RX (n+7) 0	Status output of system area *
RX (n+7) F to RX (n+7) 8	

* See the network converter **NETC01-CC** USER MANUAL for details.

■ Input/output of remote I/O

● Remote I/O input

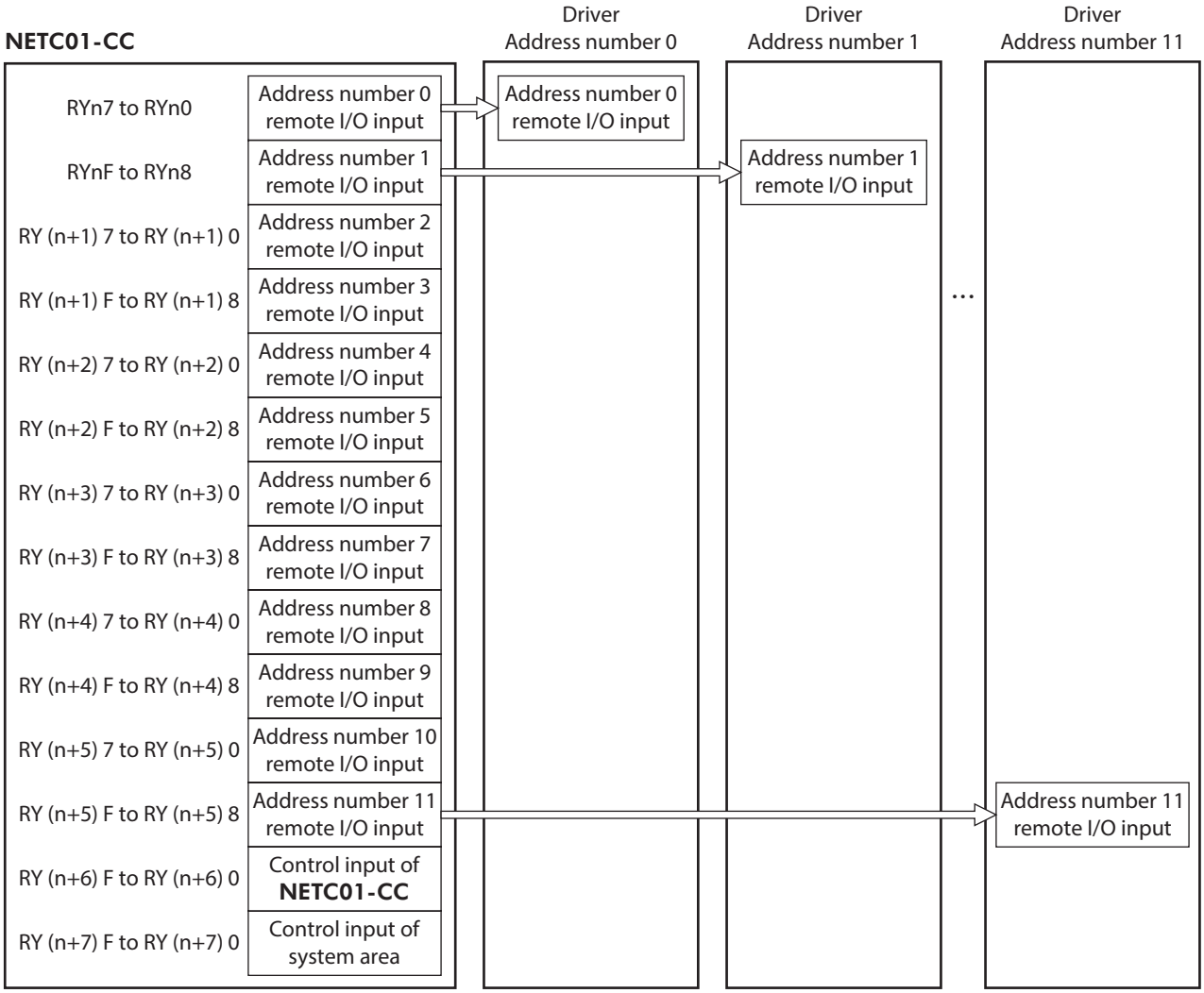

- **Remote I/O output**

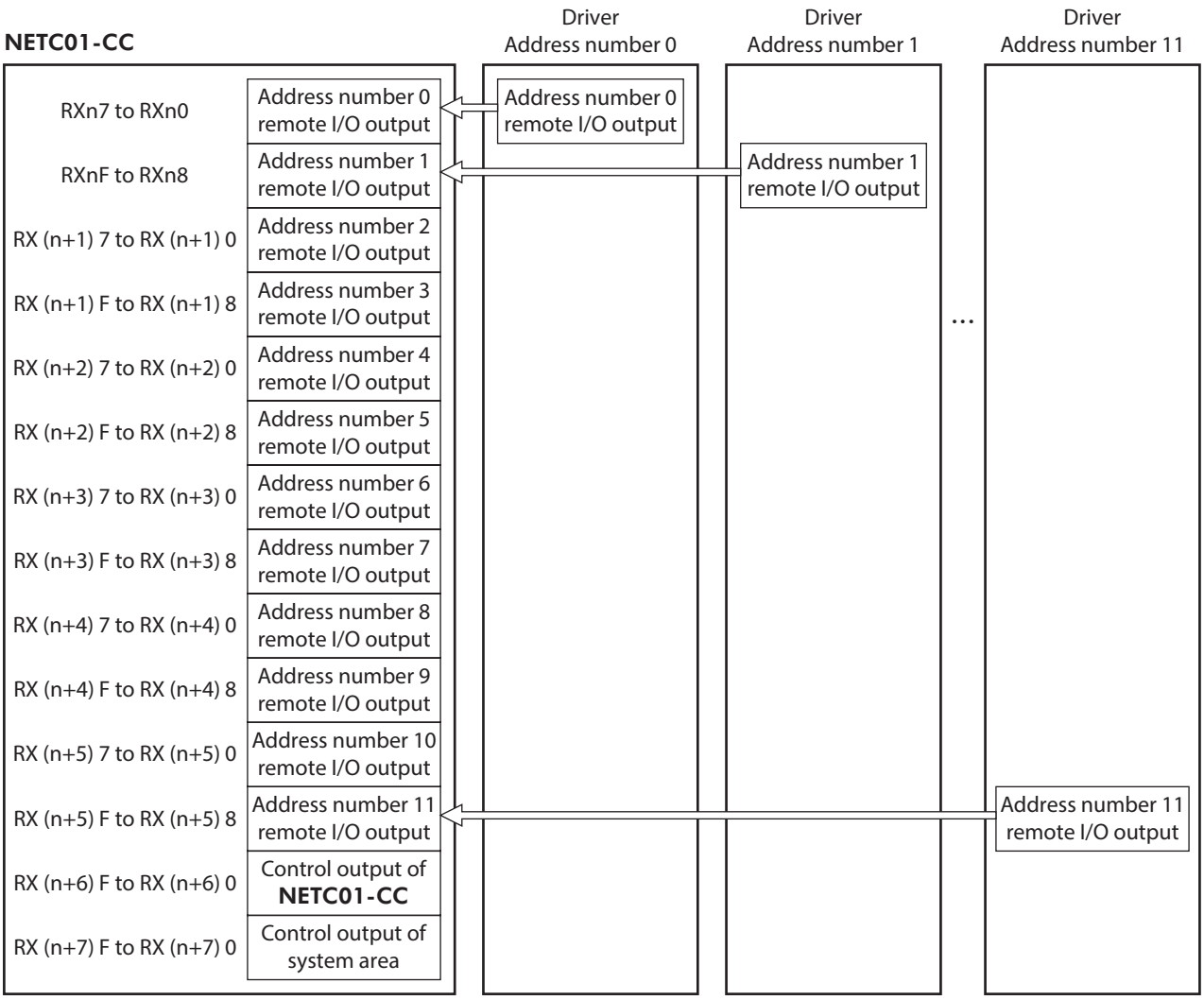

■ Details of remote I/O assignment

	Command RY (Master station to **NETC01-CC**)			Response RX (**NETC01-CC** to master station)		
	Device No.	Signal name	Description	Device No.	Signal name	Description
Address number "0"	RY (n) 0	START	Positioning operation	RX (n) 0	START_R	Response to the positioning operation
	RY (n) 1	FWD	Continuous operation (positive direction)	RX (n) 1	STEPOUT	Misstep detection
	RY (n) 2	RVS	Continuous operation (negative direction)	RX (n) 2	MOVE	Operation is in progress
	RY (n) 3	HOME	Return-to-home operation	RX (n) 3	HOME-P	Return-to-home complete
	RY (n) 4	STOP	Stop operation	RX (n) 4	ALM	Alarm
	RY (n) 5	C-ON	Motor excitation ON/OFF	RX (n) 5	READY	Ready
	RY (n) 6	–	–	RX (n) 6	–	–
	RY (n) 7			RX (n) 7	AREA	Area
Address number "1"	RY (n) 8	START	Positioning operation	RX (n) 8	START_R	Response to the positioning operation
	RY (n) 9	FWD	Continuous operation (positive direction)	RX (n) 9	STEPOUT	Misstep detection
	RY (n) A	RVS	Continuous operation (negative direction)	RX (n) A	MOVE	Operation is in progress
	RY (n) B	HOME	Return-to-home operation	RX (n) B	HOME-P	Return-to-home complete
	RY (n) C	STOP	Stop operation	RX (n) C	ALM	Alarm
	RY (n) D	C-ON	Motor excitation ON/OFF	RX (n) D	READY	Ready
	RY (n) E	–	–	RX (n) E	–	–
	RY (n) F			RX (n) F	AREA	Area
Address number "2"	RY (n+1) 0 to RY (n+1) 7	Same as Address number "0"		RX (n+1) 0 to RX (n+1) 7	Same as Address number "0"	
Address number "3"	RY (n+1) 8 to RY (n+1) F	Same as Address number "1"		RX (n+1) 8 to RX (n+1) F	Same as Address number "1"	
Address number "4"	RY (n+2) 0 to RY (n+2) 7	Same as Address number "0"		RX (n+2) 0 to RX (n+2) 7	Same as Address number "0"	
Address number "5"	RY (n+2) 8 to RY (n+2) F	Same as Address number "1"		RX (n+2) 8 to RX (n+2) F	Same as Address number "1"	
Address number "6"	RY (n+3) 0 to RY (n+3) 7	Same as Address number "0"		RX (n+3) 0 to RX (n+3) 7	Same as Address number "0"	
Address number "7"	RY (n+3) 8 to RY (n+3) F	Same as Address number "1"		RX (n+3) 8 to RX (n+3) F	Same as Address number "1"	
Address number "8"	RY (n+4) 0 to RY (n+4) 7	Same as Address number "0"		RX (n+4) 0 to RX (n+4) 7	Same as Address number "0"	
Address number "9"	RY (n+4) 8 to RY (n+4) F	Same as Address number "1"		RX (n+4) 8 to RX (n+4) F	Same as Address number "1"	
Address number "10"	RY (n+5) 0 to RY (n+5) 7	Same as Address number "0"		RX (n+5) 0 to RX (n+5) 7	Same as Address number "0"	

	Command RY (Master station to **NETC01-CC**)			Response RX (**NETC01-CC** to master station)		
	Device No.	Signal name	Description	Device No.	Signal name	Description
Address number "11"	RY (n+5) 8 to RY (n+5) F	Same as Address number "1"		RX (n+5) 8 to RX (n+5) F	Same as Address number "1"	
NETC01-CC control input/ status output	RY (n+6) 0	M-REQ0	Monitor request 0	RX (n+6) 0	M-DAT0	During execution of monitor 0
	RY (n+6) 1	M-REQ1	Monitor request 1	RX (n+6) 1	M-DAT1	During execution of monitor 1
	RY (n+6) 2	M-REQ2	Monitor request 2	RX (n+6) 2	M-DAT2	During execution of monitor 2
	RY (n+6) 3	M-REQ3	Monitor request 3	RX (n+6) 3	M-DAT3	During execution of monitor 3
	RY (n+6) 4	M-REQ4	Monitor request 4	RX (n+6) 4	M-DAT4	During execution of monitor 4
	RY (n+6) 5	M-REQ5	Monitor request 5	RX (n+6) 5	M-DAT5	During execution of monitor 5
	RY (n+6) 6	–	–	RX (n+6) 6	WNG	Warning
	RY (n+6) 7	ARM-RST	Reset alarm	RX (n+6) 7	ALM	Alarm
	RY (n+6) 8	–	–	RX (n+6) 8	C-SUC	During execution of RS-485 communication
	RY (n+6) 9			RX (n+6) 9	–	–
	RY (n+6) A			RX (n+6) A		
	RY (n+6) B			RX (n+6) B		
	RY (n+6) C	D-REQ	Command execution request	RX (n+6) C	D-END	Command processing completion
	RY (n+6) D	–	–	RX (n+6) D	R-ERR	Register error
	RY (n+6) E			RX (n+6) E	S-BSY	During system processing
	RY (n+6) F			RX (n+6) F	–	–
System area control input/ status output	RY (n+7) 0 to RY (n+7) F	–	Cannot be used	RX (n+7) 0 to RX (n+7) A	–	Cannot be used
				RX (n+7) B	CRD	Remote station communication ready
				RX (n+7) C to RX (n+7) F	–	Cannot be used

2 Method of control via MECHATROLINK communication

See the following explanation when using the **CRK** Series built-in controller type in combination with the network converter **NETC01-M2** or **NETC01-M3**, via MECHATROLINK communication. Refer to "3 Details of remote I/O" on p.164 and "4 Command code list" on p.166 for remote I/O and command code.

2-1 Guidance

If you are new to the **CRK** Series built-in controller type, read this section to understand the operating methods along with the operation flow.
This section explains the operation method in combination with the **NETC01-M2** as an example.

Note
- Before operating the motor, check the condition of the surrounding area to ensure safety.
- See the network converter **NETC01-M2**/**NETC01-M3** USER MANUAL for how to set the parameter.

STEP 1 Set the transmission rate, station address and address number.

■ Using the parameter

1. Set the "Communication (address number 0)" parameter of the **NETC01-M2** to "Enable" using the **MEXE02** or **OPX-2A**.
2. Cycle the **NETC01-M2** power.

Note
- "Communication" parameters will be enabled after the power is cycled.
- When setting the parameters of the **NETC01-M2**, use the **MEXE02** or **OPX-2A**.

■ Using the switches

Setting condition of driver
- Address number of the driver: 0
- RS-485 transmission rate: 625,000 bps
- SW4-No.2 of the function setting switch: OFF

Setting condition of NETC01-M2
- MECHATROLINK-II station address: 61
- RS-485 transmission rate: 625,000 bps
- Remote I/O occupied size: 16 bit mode
- Number of transmission bytes: 32 bytes

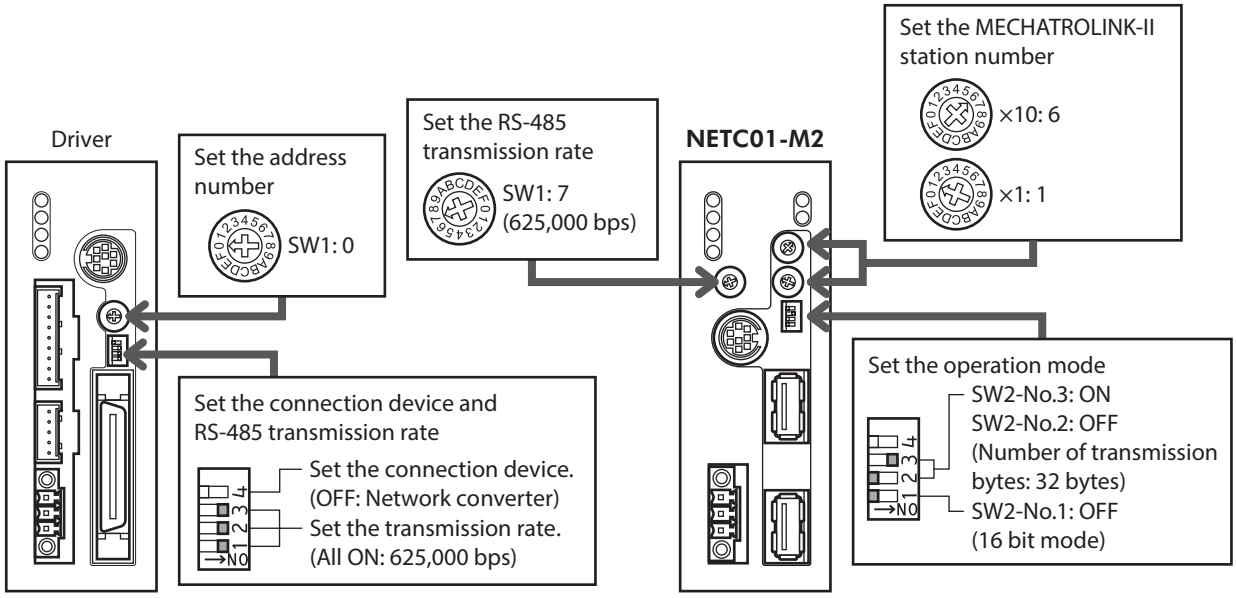

STEP 2 Check the connection and termination resistor

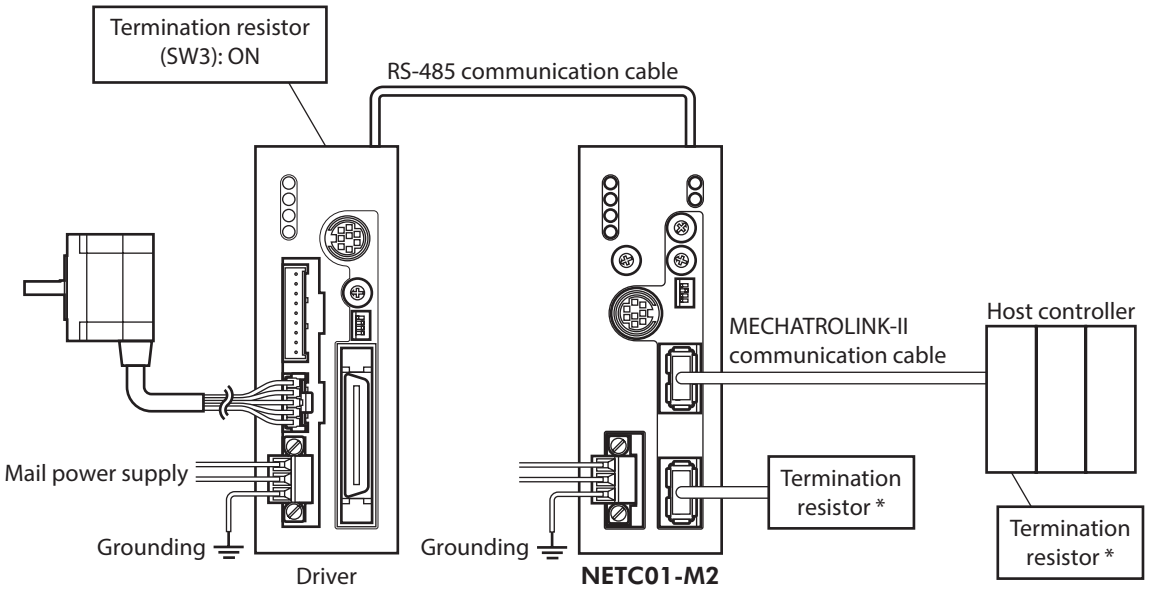

* It is not necessary for the **NETC01-M3**.

STEP 3 Turn on the power supply and check the setting

Check that the LED condition has become as shown in the figures.

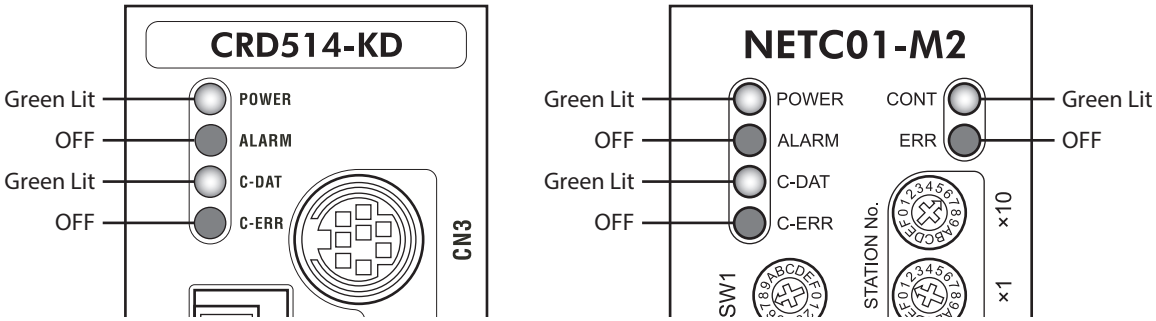

- **When C-ERR (red) of the driver or NETC01-M2 is lit:**
  Check the transmission rate or address number of RS-485 communication.
- **When ERR (red) of the NETC01-M2 is lit:**
  Check the MECHATROLINK-II communication error.

STEP 4 Set the driver parameters

Set the driver parameters using any of the **MEXE02**, **OPX-2A**, RS-485 communication or MECHATROLINK-II communication.

1. Set the "START input mode (1C00h)" parameter of the driver to "0: RS-485 communication." (Initial value: I/O)
2. Set the "HOME/FWD/RVS input mode (1C0Ch)" parameter of the driver to "0: RS-485 communication." (Initial value: I/O)
3. Set the "Data No. input mode (1C0Dh)" parameter of the driver to "0: RS-485 communication." (Initial value: I/O)
4. Set the "STOP contact configuration (1C03h)" parameter of the driver to "0: make." (Initial value: brake)

Note

- The parameters are written in the RAM when writing via RS-485 communication or MECHATROLINK-II communication. The data saved in the RAM will be erased once the driver power is turned off. When saving data to the non-volatile memory, execute "Batch non-volatile memory write" of the maintenance command. Refer to p.167.
- The operation data and parameters set by the **MEXE02** or **OPX-2A** are saved to the non-volatile memory of the driver.
- The non-volatile memory can be rewritten approximately 100,000 times.

STEP 5 Execute continuous operation

Control the I/O signal of the driver using the I/O command (DATA_RWA: 50h) of MECHATROLINK-II communication.

1. Select operation data No.01 by turning ON the M0 of the address number 0.
2. Perform continuous operation by turning ON the FWD of the address number 0.

Bit 7	Bit 6	Bit 5	Bit 4	Bit 3	Bit 2	Bit 1	Bit 0
–	–	M5	M4	M3	M2	M1	M0
–	–	C-ON	STOP	HOME	RVS	FWD	START

STEP 6 Were you able to operate the motor properly?

How did it go? Were you able to operate the motor properly? If the motor does not function, check the following points:

- Is any alarm present in the driver or **NETC01-M2**?
- Are the address number, transmission rate and termination resistor set correctly?
- Is the "Connection" parameter of the **NETC01-M2** set correctly?
- Is the C-ERR LED lit? (RS-485 communication error)
- Is the ERR LED of the **NETC01-M2** lit? (MECHATROLINK-II/III communication error)
- Is the operation data set correctly?
- Is the motor excited? Or is the excitation setting correct?
- Are the driver parameters set correctly?
- Is the STOP input of the driver I/O turned ON?

For more detailed settings and functions, refer to network converter **NETC01-M2** USER MANUAL and following pages.

2-2 Setting the switches

When using the driver in combination with the network converter, set the switches before use.

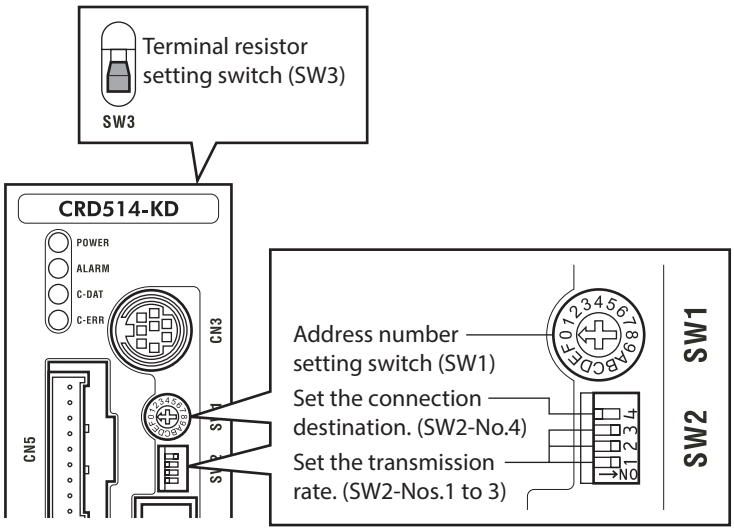

Note Be sure to turn off the motor power before setting the switches. If the switches are set while the power is still on, the new switch settings will not become effective until the driver power is cycled.

■ Setting the connection device

Using the function setting switch SW2-No.4, set the connection device of RS-485 communication.
Turn this switch OFF when controlling via the network converter.

Factory setting OFF (Network converter)

■ Address number (device address)

Using the address number setting switch (SW1), set the address number (device address). Make sure each address number (device address) you set for each driver is unique.

Factory setting 0

Address number (device address)	0	1	2	3	4	5	6	7	8	9	10	11	12	13	14	15
SW1	0	1	2	3	4	5	6	7	8	9	A	B	C	D	E	F
Connection mode	8 axes connection mode								16 axes connection mode							

■ Transmission rate

Turn Nos.1 to 3 of the function setting switch (SW2) ON to set the transmission rate to 625,000 bps.

Factory setting All ON (625,000 bps)

■ Termination resistor

Use a termination resistor for the driver located farthest away (positioned at the end) from the network converter.
Turn the terminal resistor setting switch (SW3) ON to set the terminal resistor for RS-485 communication (120 Ω).

Factory setting OFF (termination resistor disabled)

SW3	Termination resistor (120 Ω)
OFF	Disabled
ON	Enabled

2-3 I/O field map for the NETC01-M2

Update of remote I/O data (asynchronous) is executed by the "DATA_RWA" Command (50h). When the remote I/O occupied size is 16-bit mode and the number of transmission bytes is 32 bytes (initial value), I/O field map will be as table. See the network converter **NETC01-M2** USER MANUAL for other I/O field map.

Byte	Part	Type	Command	Response
1	Header field	–	DATA_RWA (50h)	DATA_RWA (50h)
2		–	OPTION	ALARM
3		–		STATUS
4		–		
5	Data field	–	Reserved	Connection status
6		–		
7		Remote I/O	Address number "0" remote I/O input	Address number "0" remote I/O output
8				
9			Address number "1" remote I/O input	Address number "1" remote I/O output
10				
11			Address number "2" remote I/O input	Address number "2" remote I/O output
12				
13			Address number "3" remote I/O input	Address number "3" remote I/O output
14				
15			Address number "4" remote I/O input	Address number "4" remote I/O output
16				
17			Address number "5" remote I/O input	Address number "5" remote I/O output
18				
19			Address number "6" remote I/O input	Address number "6" remote I/O output
20				
21			Address number "7" remote I/O input	Address number "7" remote I/O output
22				
23		Remote resistor	Register address number	Register address number response
24				
25			Command code + TRIG	Command code response + TRIG response + STATUS
26				
27			DATA	DATA response
28				
29				
30				
31		–	Reserved	Reserved

2-4 I/O field map for the NETC01-M3

Update of remote I/O data (asynchronous) is executed by "DATA_RWA" Command (20h). When the remote I/O occupied size is 16-bit mode and the number of transmission bytes is 32 bytes (initial value), I/O field map will be as table. See the network converter **NETC01-M3** USER MANUAL for other I/O field map.

Byte	Type	Command	Response
0	–	DATA_RWA (20h)	DATA_RWA (20h)
1	–	WDT	RWDT
2	–	CMD_CTRL	CMD_STAT
3	–		
4	–	Reserved	Connection status
5	–		
6	Remote I/O	Address number "0" remote I/O input	Address number "0" remote I/O output
7			
8		Address number "1" remote I/O input	Address number "1" remote I/O output
9			
10		Address number "2" remote I/O input	Address number "2" remote I/O output
11			
12		Address number "3" remote I/O input	Address number "3" remote I/O output
13			
14		Address number "4" remote I/O input	Address number "4" remote I/O output
15			
16		Address number "5" remote I/O input	Address number "5" remote I/O output
17			
18		Address number "6" remote I/O input	Address number "6" remote I/O output
19			
20		Address number "7" remote I/O input	Address number "7" remote I/O output
21			
22	Remote resistor	Register address number	Register address number response
23			
24		Command code + TRIG	Command code response + TRIG response + STATUS
25			
26		DATA	DATA response
27			
28			
29			
30	–	Reserved	Reserved
31	–		

2-5 Communication format

Communication formats to the driver and **NETC01-M2** (**NETC01-M3**) are as follows.

■ Remote I/O input

For details on remote I/O, refer to p.164.

● **8 axes connection mode [16 bit mode]**

Bit 7	Bit 6	Bit 5	Bit 4	Bit 3	Bit 2	Bit 1	Bit 0
–	–	M5	M4	M3	M2	M1	M0
–	–	C-ON	STOP	HOME	RVS	FWD	START

● **16 axes connection mode [8 bit mode]**

Bit 7	Bit 6	Bit 5	Bit 4	Bit 3	Bit 2	Bit 1	Bit 0
–	–	C-ON	STOP	HOME	RVS	FWD	START

■ Remote I/O output

● **8 axes connection mode [16 bit mode]**

Bit 7	Bit 6	Bit 5	Bit 4	Bit 3	Bit 2	Bit 1	Bit 0
ALM	WNG	M5_R	M4_R	M3_R	M2_R	M1_R	M0_R
AREA	–	READY	–	HOME-P	MOVE	STEPOUT	START_R

● **16 axes connection mode [8 bit mode]**

Bit 7	Bit 6	Bit 5	Bit 4	Bit 3	Bit 2	Bit 1	Bit 0
AREA	–	READY	ALM	HOME-P	MOVE	STEPOUT	START_R

■ Remote register input

● **Command [NETC01-M2 (NETC01-M3) to driver]**

Bit 7	Bit 6	Bit 5	Bit 4	Bit 3	Bit 2	Bit 1	Bit 0
–	TRIG	Command code					
DATA							

● **Explanation of command**

Name	Description	Setting range
Command code	The command sets the command code for "write and read of parameters," "monitor" and "maintenance."	–
TRIG	This is the trigger for handshake to execute the command code. When turning the TRIG from 0 to 1, the command code and DATA will be executed.	0: No motion 1: Execution
DATA	This is the data writing to the driver (little endian).	–

■ Remote register output

● **Response [Driver to NETC01-M2 (NETC01-M3)]**

Bit 7	Bit 6	Bit 5	Bit 4	Bit 3	Bit 2	Bit 1	Bit 0
STATUS	TRIG_R	Command code					
DATA_R							

● **Explanation of command**

Name	Description	Setting range
Command code	The response returns the command code of the command.	–
TRIG_R	This is the trigger for handshake indicating the completion of the command code. When the command code is completed, the TRIG_R will be turned from 0 to 1.	0: Not processing 1: Execution completion
STATUS	This indicates the result that executed the command code.	0: Normal operation 1: Error
DATA_R	This is the data reading from the driver (little endian).	–

3 Details of remote I/O

This is common to **NETC01-CC**, **NETC01-M2** and **NETC01-M3**.

3-1 Input signals to the driver

Each input signal has the order of priority and it is detected by the following order.
C-ON > STOP > FWD/RVS > HOME > START

Signal name	Function	Description
C-ON	Motor excitation ON	Motor excitation switching between excitation and non-excitation. 0: Motor non-excitation * 1: Motor excitation *
STOP	Stop operation	This signal is used to stop positioning operation, continuous operation and return-to-home operation. How to stop operation is based on the "STOP action" parameter (command code 0C02h) of the parameter command. 0: Possible to operate 1: Stop operation
HOME	Return-to-home operation	This signal is used to execute return-to-home operation. Operation is started at the ON edge of the HOME bit.
RVS	Continuous operation (negative direction)	This signal is used to execute continuous operation in the negative direction. However, when the FWD bit and RVS bit are turned ON simultaneously, continuous operation will be stopped. 0: Stop continuous operation 1: Execute continuous operation
FWD	Continuous operation (positive direction)	This signal is used to execute continuous operation in the positive direction. However, when the FWD bit and RVS bit are turned ON simultaneously, continuous operation will be stopped. 0: Stop continuous operation 1: Execute continuous operation
START	Positioning operation	This signal is used to execute positioning operation. Operation is started at the ON edge of the START bit.
M0 to M5	Select the operation data No.	Uses these six bits to select the operation data number. See p.49 for details on the combination.

* It is based on the setting value of the "C-ON logic configuration" parameter for the driver.

3-2 Output signals from the driver

Signal name	Function	Description
AREA	Inside area	This signal is output when the motor command position is inside the area. 0: Command position is outside the area 1: Command position is inside the area
READY	Ready	This signal is output when the driver is ready to operate. Start operation after checking the READY output has been turned ON. When the READY output is OFF, operation cannot be performed. 0: Not ready 1: Ready
HOME-P	Return-to-home complete/ Current position zero	This signal is output when return-to-home operation has completed. 0: Return-to-home operation has not completed. 1: Return-to-home operation has completed.

Signal name	Function	Description
MOVE	Output during operation	This signal is output when the motor operates. 0: Motor stopped 1: Motor operating
STEPOUT	Step-out detection	This signal is output when step-out has been detected. 0: Step-out is not detected 1: Step-out is detecting
START_R	Response for positioning operation start signal	This signal is output in response to the START input. 0: START OFF 1: START ON
ALM	Alarm	This signal is output when the protective function has been triggered and the alarm has been generated. 0: Alarm not present 1: Alarm present
WNG	Warning	This signal is output when a warning has been generated. Once the cause of the warning is removed, the WNG will turn OFF automatically. 0: Warning not present 1: Warning present
M0_R to M5_R	Response to the operation data No.	The operation data number currently selected is output.

■ Operation data No.

● Operation data number and input signal M0 to M5

Select an operation data based on a combination of ON/OFF status of the M0 to M5. See p.49 for details.

Operation data No.	M5	M4	M3	M2	M1	M0
Sequential operation	OFF	OFF	OFF	OFF	OFF	OFF
1	OFF	OFF	OFF	OFF	OFF	**ON**
2	OFF	OFF	OFF	OFF	**ON**	OFF
· · ·	· · ·	· · ·	· · ·	· · ·	· · ·	· · ·
62	**ON**	**ON**	**ON**	**ON**	**ON**	OFF
63	**ON**	**ON**	**ON**	**ON**	**ON**	**ON**

● Positioning operation

When selecting the operation data No. and turning the START ON, positioning operation will be started.
When selecting the operation data No.0, sequential positioning operation is performed.

● Continuous operation

When selecting any of the operation data No.1 to 63 and turning the FWD or RVS to ON, continuous operation is started.
If the operation data No.0 is selected, continuous operation is not performed.

4 Command code list

This is common to **NETC01-CC**, **NETC01-M2** and **NETC01-M3**.

4-1 Group function

The driver has a group function. Multiple devices are made into a group and a operation command is sent to all devices in the group at once.

■ Group composition

A group consists of one parent device and child devices.

- **Group address**

  To perform a group send, set a group address to the child devices to be included in the group.
  The child devices to which the group address has been set can receive a command sent to the parent device.
  The operation command will be sent to the child devices in the same group by sending it to the parent device.

- **Parent device**

  No special setting is required on the parent device to perform a group send. The address of the parent device becomes the group address.

- **Child device**

  Use a "Group" (1018h) to set a group address to each child device.

Note Only remote I/O input can execute the group function. Read from commands and parameters or write to commands and parameters cannot be executed.

■ Group setting

The group setting is not saved in the non-volatile memory even when the maintenance command "Batch non-volatile memory write" executes.

Command code		Description	Setting range	Initial value
Read	Write			
0F03h	1F03h	Group	Set the group address. −1: Individual (No group setting) 0 to 15: Set the group address. (Address number of parent device) *	−1

* Set in the 0 to 11 range when using the **NETC01-CC**, and set in the 0 to 15 range when using the **NETC01-M2** or **NETC01-M3**.

■ Example for setting of the group function

Set as follows when making a group by setting the driver of address number 0 to the parent device and by setting the driver of address number 1 and 2 to the child devices.

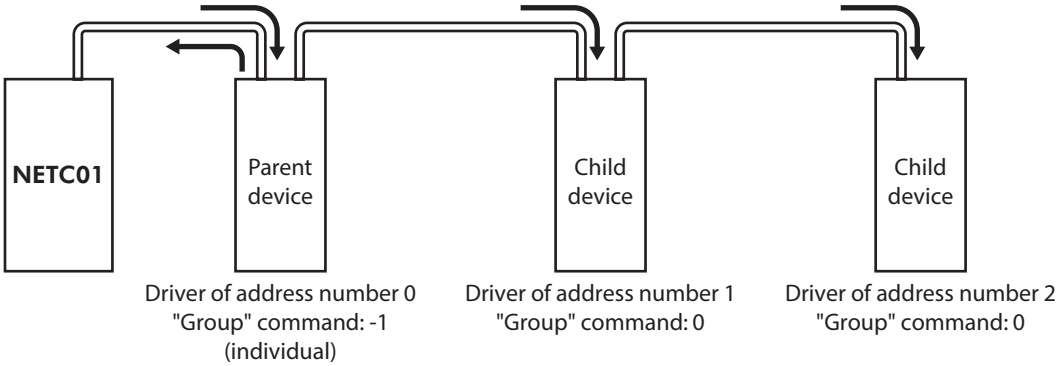

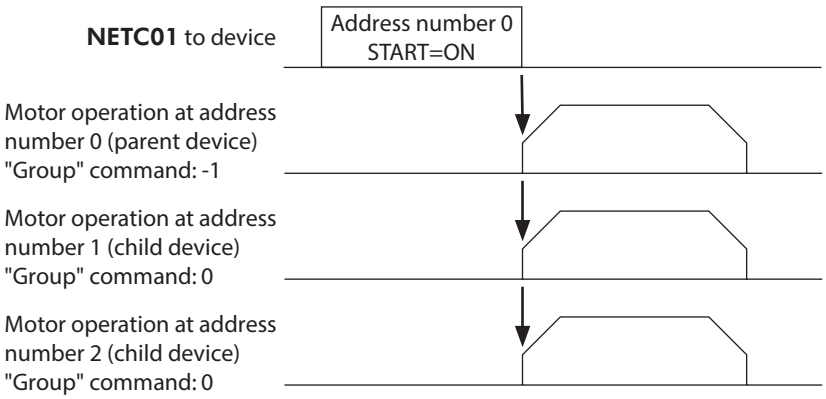

Note When inputting a command to the parent device with remote I/O, the motors of the parent device and child devices will operate. The motors will not operate if the command is input to the child devices.

4-2 Maintenance command

These commands are used to clear the alarm records and warning records. They are also used to execute the batch processing for the non-volatile memory.

Command code	Name	Description	Setting range
3E80h	Reset alarm	Resets the alarms that are present.	1: Execute
3E81h	Clear alarm records	Clears alarm records.	
3E82h	Clear warning records	Clears warning records.	
3E84h	Batch non-volatile memory read	Reads the parameters saved in the non-volatile memory, to the RAM. All operation data and parameters previously saved in the RAM are overwritten.	
3E85h	Batch non-volatile memory write	Writes the parameters saved in the RAM to the non-volatile memory.	
3E86h	All data initialization	Resets the parameters saved in the RAM and non-volatile memory to the initial value.	
3E88h	P-PRESET execute	Update the command position to the value of the "Preset position" parameter.	
3E89h	Clear communication error code	Clears the communication error records.	
3E8Ah	Preset encoder counter *	Presets the encoder counter value as the value of the “Encoder counter preset value” parameter.	
3E8Bh	Clear counter	Clears the command position and encoder counter value to 0. Internal deviations of the driver are also cleared, so any deviation error, if present, is reset.	
3E8Ch	Operation data initialization	Resets the operation data.	
3E8Dh	Application parameters initialization	Resets the application parameters.	
3E8Eh	System parameters initialization	Resets the system parameters.	

* This command is used when an encoder is connected.

Note The non-volatile memory can be rewritten approximately 100,000 times.

4-3 Monitor command

These commands are used to monitor the driver condition.

Command code	Name	Description
2E00h	Present alarm	Monitors the present alarm code.
2E01h	Alarm record 1	Monitors the alarm records 1 to 10.
2E02h	Alarm record 2	
2E03h	Alarm record 3	
2E04h	Alarm record 4	
2E05h	Alarm record 5	
2E06h	Alarm record 6	
2E07h	Alarm record 7	
2E08h	Alarm record 8	
2E09h	Alarm record 9	
2E0Ah	Alarm record 10	
2E0Bh	Present warning	Monitors the present warning code.
2E0Ch	Warning record 1	Monitors the warning records 1 to 10.
2E0Dh	Warning record 2	
2E0Eh	Warning record 3	
2E0Fh	Warning record 4	
2E10h	Warning record 5	
2E11h	Warning record 6	
2E12h	Warning record 7	
2E13h	Warning record 8	
2E14h	Warning record 9	
2E15h	Warning record 10	
2E16h	Present selected data No.	Monitors the operation data No. currently selected.
2E17h	Present operation data No.	Monitors the operation data No. corresponding to the data used in the current positioning operation. This address is used in linked-motion operation and sequential positioning operation. While the motor is stopped, the last used operation data number is indicated.
2E18h	Command position [step]	Monitors the command position.
2E1Ah	Command speed [Hz]	Monitors the current command speed.
2E1Bh	Encoder counter	Monitors the encoder counter.
2E1Eh	Remaining dwell time	Monitors how much of the dwell time used in the linked-motion operation 2 remains.
2E1Fh	I/O status	Monitor the each I/O signal (CN2) of the driver. (See "I/O status (2E1Fh)" on p.169.)
2E22h	Communication error code record 1	Monitors the communication error records 1 to 10 that have occurred in the past.
2E23h	Communication error code record 2	
2E24h	Communication error code record 3	
2E25h	Communication error code record 4	
2E26h	Communication error code record 5	
2E27h	Communication error code record 6	
2E28h	Communication error code record 7	
2E29h	Communication error code record 8	
2E2Ah	Communication error code record 9	
2E2Bh	Communication error code record 10	
2E30h	Driver status	Monitors the driver status. (See "Driver status (2E30h)" on p.169.)

■ I/O status (2E1Fh)

Byte	Bit7	Bit6	Bit5	Bit4	Bit3	Bit2	Bit1	Bit0
0 (least significant bit)	–	–	M5	M4	M3	M2	M1	M0
1	–	RVS	FWD	HOME/ P-PRESET	STOP	AWO	ALM-RST	START
2	–	–	–	–	SLIT	HOMES	–LS	+LS
3 (most significant bit)	–	–	OUT4	OUT3	OUT2	OUT1	ALM	MOVE

■ Driver status (2E30h)

Byte	Bit7	Bit6	Bit5	Bit4	Bit3	Bit2	Bit1	Bit0
0 (least significant bit)	ENABLE	ALM	AREA	S-BSY	READY	HOME-P	0	MOVE
1	START_R	O.H.	HOMES	SLIT	–LS	+LS	STEPOUT	WNG
2	ZSG	TIM	M5_R	M4_R	M3_R	M2_R	M1_R	M0_R
3 (most significant bit)	ALMCD							

Signal name of driver status

Signal name	Description	Read range
MOVE	Indicates the operating condition of the motor.	0: Motor stopped 1: Motor operating
HOME-P	Indicates that the motor is at home position. It can be used as a home-seeking completion signal.	0: Motor not positioned at home 1: Motor positioned at home (home-seeking completed)
READY	Indicates that the driver is ready.	0: Not ready 1: Ready
S-BSY	Indicates the internal processing condition as a result of RS-485 communication.	0: Internal processing not in progress 1: Internal processing in progress
AREA	The motor output shaft is inside the specified range.	0: Outside area 1: Inside area
ALM	An alarm is present.	0: Alarm not present 1: Alarm present
ENABLE	Indicates the excitation condition of the motor.	0: Motor not excited 1: Motor excited
WNG	A warning is present.	0: Warning not present 1: Warning present
STEPOUT	The deviation is abnormal.	0: Deviation error not present 1: Deviation error present
+LS	Indicates the condition of the I/O +LS input.	0: OFF (photocoupler un-energized) 1: ON (photocoupler energized)
–LS	Indicates the condition of the I/O –LS input.	
SLIT	Indicates the condition of the I/O SLIT input.	
HOMES	Indicates the condition of the I/O HOMES input.	
O.H.	Indicates whether or not an overheat warning is present.	0: Overheat warning not present 1: Overheat warning present
START_R	Indicates the status of START. *	0: START=OFF 1: START=ON
TIM	Indicates the excitation condition of the motor. "1" is read when the motor is at its excitation home.	0: TIM not being detected 1: TIM being detected
ZSG	Indicates the Z-phase condition of the encoder input.	0: ZSG not being detected 1: ZSG being detected
M0_R to M5_R	Selected operation data number *	0 to 63: Operation data number
ALMCD	Indicates the alarm code of the present alarm.	Alarm code

* START and M0 to M5 can be turned ON/OFF via I/O or RS-485 communication. If these signals are controlled via I/O, the I/O-controlled ON/OFF status is returned. If the signals are controlled via RS-485 communication, the RS-485-communication-controlled ON/OFF status is returned. I/O control is selected as the default prior to shipment.

4-4 Operation data

Command code		Description	Setting range	Initial value
Read	Write			
0001h to 003Fh	1001h to 103Fh	Position No.1 to Position No.63	–8,388,608 to 8,388,607 step	0
0101h to 013Fh	1101h to 113Fh	Operating speed No.1 to Operating speed No.63	1 to 500,000 Hz	1,000
0201h to 023Fh	1201h to 123Fh	Operation mode No.1 to Operation mode No.63	0: Incremental 1: Absolute	0
0301h to 033Fh	1301h to 133Fh	Operation function No.1 to Operation function No.63	0: Single-motion 1: Linked-motion 2: Linked-motion 2	0
0401h to 043Fh	1401h to 143Fh	Sequential positioning No.1 to Sequential positioning No.63	0: Disable 1: Enable	0
0501h to 053Fh	1501h to 153Fh	Acceleration rate No.1 to Acceleration rate No.63	0.001 to 1,000.000 ms/kHz	30.000
0601h to 063Fh	1601h to 163Fh	Deceleration rate No.1 to Deceleration rate No.63		
0801h to 083Fh	1801h to 183Fh	Dwell time No.1 to Dwell time No.63	0 to 50,000 (1=0.001 s)	0

4-5 Application parameter

Command code		Description	Setting range	Initial value
Read	Write			
0C00h	1C00h	START input mode	0: RS-485 communication 1: I/O	1
0C01h	1C01h	I/O STOP input	0: Disable 1: Enable	1
0C02h	1C02h	STOP action	0: Immediate stop 1: Decelerate stop 2: Immediate stop & Current OFF 3: Decelerate stop & Current OFF	1
0C03h	1C03h	STOP contact configuration	0: Make (N.O.) 1: Break (N.C.)	1
0C04h	1C04h	C-ON logic configuration	0: 0=Not excited, 1=Excited 1: 0=Excited, 1=Not excited	0
0C06h	1C06h	OUT1 signal mode selection	See table on p.172.	5
0C07h	1C07h	OUT2 signal mode selection		7
0C08h	1C08h	OUT3 signal mode selection		8
0C09h	1C09h	OUT4 signal mode selection		9
0C0Ah	1C0Ah	HOME/P-PRESET input switching	0: HOME 1: P-PRESET	0
0C0Bh	1C0Bh	Motor excitation mode	0: RS-485 communication 1: I/O	1
0C0Ch	1C0Ch	HOME/FWD/RVS input mode		

Command code		Description	Setting range	Initial value
Read	Write			
0C0Dh	1C0Dh	Data No. input mode	0: RS-485 communication 1: I/O	1
0C0Eh	1C0Eh	AWO contact configuration	0: Make (N.O.) 1: Break (N.C.)	0
0C10h	1C10h	Hardware overtravel detection	0: Disable 1: Enable	1
0C11h	1C11h	LS contact configuration	0: Make (N.O.) 1: Break (N.C.)	0
0C12h	1C12h	HOMES contact configuration		
0C13h	1C13h	SLIT contact configuration		
0C14h	1C14h	Overtravel action	0: Immediate stop 1: Decelerate stop	0
0C15h	1C15h	Preset position	–8,388,608 to +8,388,607 step	0
0C16h	1C16h	Area 1		
0C17h	1C17h	Area 2		
0C1Ah	1C1Ah	Encoder counter preset value *		
0C20h	1C20h	Operating current	5 to 100%	100
0C21h	1C21h	Standstill current	5 to 50%	50
0C40h	1C40h	Common acceleration rate	0.001 to 1,000.000 ms/kHz	30.000
0C41h	1C41h	Common deceleration rate		
0C42h	1C42h	Starting speed	1 to 500,000 Hz	100
0C46h	1C46h	JOG operating speed		1,000
0C47h	1C47h	JOG acceleration/deceleration rate	0.001 to 1,000.000 ms/kHz	30.000
0C48h	1C48h	JOG starting speed	1 to 500,000 Hz	100
0C49h	1C49h	Acceleration/deceleration type	0: Common 1: Separate	0
0C60h	1C60h	Home-seeking mode	0: 2 sensors 1: 3 sensors	1
0C62h	1C62h	Operating speed of home-seeking	1 to 500,000 Hz	1,000
0C63h	1C63h	Acceleration/deceleration rate of home-seeking	0.001 to 1,000.000 ms/kHz	30.000
0C64h	1C64h	Starting speed of home-seeking	1 to 500,000 Hz	100
0C65h	1C65h	Position offset of home-seeking	–8,388,608 to +8,388,607 step	0
0C66h	1C66h	Starting direction of home-seeking	0: Negative direction 1: Positive direction	1
0C67h	1C67h	SLIT detection with home-seeking	0: Disable 1: Enable	0
0C68h	1C68h	TIM signal detection with home-seeking	0: Disable 1: Enable (TIM) 2: Enable (ZSG) *	
0C69h	1C69h	Backward steps in 2-sensor mode home-seeking	0 to 32,767 step	200
0C80h	1C80h	Stepout detection band *	0.1 to 360.0 deg	72
0C91h	1C91h	Overvoltage warning	25.0 to 35.0 V	310
0C93h	1C93h	Overheat warning	40 to 85 °C	85
0CC0h	1CC0h	Software overtravel	0: Disable 1: Enable	1
0CC1h	1CC1h	Positive software limit	–8,388,608 to +8,388,607 step	8,388,607
0CC2h	1CC2h	Negative software limit		–8,388,608
0CC3h	1CC3h	Display mode of the data setter speed	0: Signed 1: Absolute	0

Command code		Description	Setting range	Initial value
Read	Write			
0CC4h	1CC4h	The data setter editing mode	0: Disable 1: Enable	1
0CC6h	1CC6h	Communication timeout action	0: Immediate stop 1: Decelerate stop	1
0CCAh	1CCAh	Stepout detection action *	0: No operation (alarm/warning not present) 1: Warning 2: Alarm	0

* This parameter is used when an encoder is connected.

Setting range of "OUT signal mode selection" parameter

5: AREA 6: TIM 7: READY	8: WNG 9: HOME-P 10: ZSG *	11: R-OUT1 12: R-OUT2 13: STEPOUT *	14: O.H. 15: R-OUT3 16: R-OUT4

* This signal is used when an encoder is connected.

4-6 System parameter

Note To make the new system parameter settings effective, execute "Batch non-volatile memory write" and then cycle the power.

Command code		Description	Setting range	Initial value
Read	Write			
0D0Ah	1D0Ah	Motor rotation direction	0: + direction=CCW 1: + direction=CW	1
0D0Ch	1D0Ch	Stepout detection *	0: Disable 1: Enable	0
0D0Dh	1D0Dh	Motor step angle	See table next.	0
0D0Eh	1D0Eh	Encoder electronic gear A *	1 to 250,000	500
0D0Fh	1D0Fh	Encoder electronic gear B *		

* This parameter is used when an encoder is connected.

- **Setting value of the "Motor step angle" parameter**

If the base step angle of the motor is 0.72°

Setting	Step angle	Number of divisions
0	0.72°	1
1	0.36°	2
2	0.288°	2.5
3	0.18°	4
4	0.144°	5
5	0.09°	8
6	0.072°	10
7	0.036°	20
8	0.0288°	25
9	0.018°	40
10	0.0144°	50
11	0.009°	80
12	0.0072°	100
13	0.00576°	125

If the base step angle of the motor is 0.36°

Setting	Step angle	Number of divisions
0	0.36°	1
1	0.18°	2
2	0.144°	2.5
3	0.09°	4
4	0.072°	5
5	0.045°	8
6	0.036°	10
7	0.018°	20
8	0.0144°	25
9	0.009°	40
10	0.0072°	50
11	0.0045°	80
12	0.0036°	100
13	0.0028°	125

Setting	Step angle	Number of divisions
14	0.0036°	200
15	0.00288°	250

Setting	Step angle	Number of divisions
14	0.0018°	200
15	0.00144°	250

Note
- Step angles are theoretical values.
- With the geared type, the value of "step angle/gear ratio" becomes the actual step angle.
- The base step angle is 0.36° for high-resolution type motors.

4-7 Operation command

Command code		Description	Setting range	Initial value
Read	Write			
0F00h	1F00h	Remote output	Controls the ON-OFF status of the remote output (R-OUT1 to R-OUT4). See table next.	0
0F04h	1F04h	Select the operation data No.	Selects the data number to be operated. This is effective when the "Data No. input mode (0C0Dh/1C0Dh)" parameter is set to "0: RS-485 communication" in 12-axes connection mode.	0

Setting range of remote output

Setting value	R-OUT4	R-OUT3	R-OUT2	R-OUT1
0	OFF	OFF	OFF	OFF
1	OFF	OFF	OFF	**ON**
2	OFF	OFF	**ON**	OFF
3	OFF	OFF	**ON**	**ON**
4	OFF	**ON**	OFF	OFF
5	OFF	**ON**	OFF	**ON**
6	OFF	**ON**	**ON**	OFF
7	OFF	**ON**	**ON**	**ON**
8	**ON**	OFF	OFF	OFF
9	**ON**	OFF	OFF	**ON**
10	**ON**	OFF	**ON**	OFF
11	**ON**	OFF	**ON**	**ON**
12	**ON**	**ON**	OFF	OFF
13	**ON**	**ON**	OFF	**ON**
14	**ON**	**ON**	**ON**	OFF
15	**ON**	**ON**	**ON**	**ON**

7 Inspection, troubleshooting and remedial actions

This part explains the periodical inspection methods as well as confirmation items and remedial actions when problems have happened.

◆Table of contents

1 Inspection and maintenance 176

1-1 Inspection.....176
1-2 Warranty.....176
1-3 Disposal.....176

2 Alarms and warnings 177

2-1 Alarms.....177
2-2 Warnings.....180

3 Troubleshooting and remedial actions 181

1 Inspection and maintenance

1-1 Inspection

It is recommended that periodic inspections for the items listed below are conducted after each operation of the motor. If an abnormal condition is noted, discontinue any use and contact your nearest Oriental Motor sales office.

■ During inspection

- Are any of the motor mounting screws loose?
- Check for any unusual noises in the motor bearings (ball bearings) or other moving parts.
- Are there any scratches, signs of stress or loose driver connections in the motor cable?
- Are the motor output shaft and load shaft out of alignment?
- Check if the installation place of the driver is loose.
- Are there any loose driver connectors?
- Is there attachment of dust, etc., on the driver?
- Are there any strange smells or appearances within the driver?

Note The driver uses semiconductor elements. Handle the driver with care since static electricity may damage semiconductor elements. Static electricity may damage the driver.

1-2 Warranty

Check on the Oriental Motor Website for the product warranty.

1-3 Disposal

Dispose the product correctly in accordance with laws and regulations, or instructions of local governments.

2 Alarms and warnings

The driver provides alarms that are designed to protect the driver from overheating, poor connection, error in operation, etc. (protective functions), as well as warnings that are output before the corresponding alarms generate (warning functions).

2-1 Alarms

When an alarm generates, the ALM output will turn OFF and the motor will stop. At the same time, the ALARM LED will start blinking. The present alarm can be checked by counting the number of times the ALARM LED blinks. Present alarms can be checked using the **MEXE02**, **OPX-2A** or RS-485 communication. You can also check the records of up to ten most recent alarms starting from the latest one, or clear the alarm records.

Example: Overvoltage alarm (number of times the ALARM LED blinks: 3)

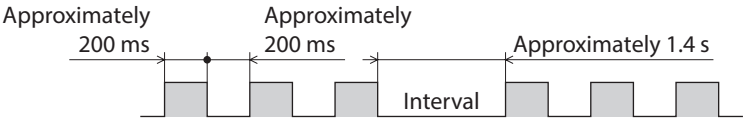

■ Alarm reset

Perform one of the reset operations specified below.
Before resetting an alarm, always remove the cause of the alarm and ensure safety.
Refer to p.52 for the timing chart.

- Turn the ALM-RST input to ON and then OFF. (The alarm will be reset at the OFF edge of the input.)
- Perform an alarm reset using the **MEXE02**, **OPX-2A** or RS-485 communication.
- Cycle the power.

Note Some alarms cannot be reset with the ALM-RST input, **MEXE02**, **OPX-2A** or RS-485 communication. Check with the "Alarm list" on p.178. To reset these alarms, you must cycle the power.

■ Alarm list

Alarm type	Number of times the ALARM LED blinks	Alarm code	Motor operation	Alarm reset *1	Cause	Remedial action
Overheat	2	21	The motor current is cut off.	Possible	The internal temperature of the driver exceeded 85 °C (185 °F).	Review the ventilation condition in the enclosure.
Overvoltage	3	22		Not possible	• The internal voltage exceeded the permissible value due to regeneration, etc. • The power supply voltage exceeded the allowable value.	• If this alarm generates during operation, reduce the load or increase the acceleration/deceleration rate. • Check the power supply voltage.
Overflow	4	10	The motor stops.	Possible *2	The deviation between the encoder counter value and command position reached the stepout detection band when the "Stepout detection action" parameter was set to "alarm."	• Reduce the load, or increase the acceleration/deceleration rate. • Check the setting of "Stepout detection band" parameter. • Check the setting of "Encoder electronic gear" parameter.
±LS both sides active	7	60		Possible	Both the +LS and –LS signals were detected when LS detection was enabled.	Check the sensor logic and setting of "LS contact configuration" parameter.
Reverse limit sensor connection		61			The LS opposite to the operating direction has detected during a return-to-home operation.	Check the ±LS wiring.
Home seeking error		62			Return-to-home operation did not complete normally.	• An unanticipated load may have been applied during the return-to-home operation. Check the load. • If the installation positions of ±LS and HOMES are close to one another, the return-to-home sequence may not end properly, depending on the starting direction of return-to-home operation. Review the sensor installation positions and the starting direction of return-to-home operation. • Return-to-home operation may have been performed in a condition where both +LS and –LS were detected. Check the sensor logic and the setting of "LS contact configuration" parameter.
No HOMES		63			The HOMES is not detected at a position between +LS and –LS during return-to-home operation in 3-sensor mode.	• Set a HOMES between +LS and –LS. • Check the HOMES wiring.

Alarm type	Number of times the ALARM LED blinks	Alarm code	Motor operation	Alarm reset *1	Cause	Remedial action
TIM, Z, SLIT input error	7	64	The motor stops.	Possible	None of the SLIT input, TIM output and ZSG output could be detected during return-to-home operation.	• Adjust the connection condition of the motor output shaft and load as well as the HOMES position so that at least one of the SLIT input, TIM output and ZSG output will turn ON while HOMES is ON. • If the SLIT input, TIM output and ZSG output are not used with HOMES, set the "TIM signal detection with home-seeking" parameter and "SLIT detection with home-seeking" parameter to "disable."
Hardtware overtravel		66			A +LS or –LS signal was detected when hardware overtravel was enabled.	Reset alarm using the ALM-RST input, and then pull out from the LS sensor via continuous operation or return-to-home operation.
Software overtravel		67			A software limit was reached when software overtravel was enabled.	Perform the operation within the range between the software limits. In single-motion operation, check to see if the position exceeds the softlimit. In linked-motion operation, check to see if the result of linked position exceeds the softlimit.
Home seeking offset error		6A			A limit sensor signal was detected during offset movement as part of return-to-home operation.	Check the setting of "Position offset of home-seeking" parameter.
Invalid operation data		70			• Five or more data may be linked. • Data of different directions may be linked • In a sequential positioning operation, "sequential positioning" was not set to "enable" for operation data No.01.	• Keep the number of operation data to be linked to four or less. • Link operation data having the same direction. • In a sequential positioning operation, set "sequential positioning" to "enable" for operation data No.01.
RS-485 communication error		84	The motor current is cut off.	Not possible	The number of consecutive RS-485 communication errors reached the value set in the "Communication error alarm" parameter.	See "10 Detection of communication errors" on p.135.
RS-485 communication timeout		85	The motor stops.	Possible	The time set in the applicable parameter has elapsed, and yet the communication could not be established with the host controller.	

Alarm type	Number of times the ALARM LED blinks	Alarm code	Motor operation	Alarm reset *1	Cause	Remedial action
Network bus error *3	7	81	The motor stops.	Possible	The bus of host network of the network converter turned off while the motor was operating.	Check the condition of the network converter.
Network converter error *3		8E			The network converter generated an alarm.	
EEPROM error	9	41	The motor current is cut off.	Not possible	The stored data was damaged.	Initialize the parameters using the **MEXE02**, **OPX-2A** or RS-485 communication.

*1 Reset alarm using the ALM-RST input/**MEXE02**/**OPX-2A**/RS-485 communication.
*2 The alarm cannot be reset by merely turning the ALM-RST input ON. First recover from the deviation error and reset the alarm by the ALM-RST input. See p.90 for how to recover from deviation error.
*3 This error is detected when a network converter is used in combination.

2-2 Warnings

When a warning generates, the WNG output will turn ON. The motor will continue to operate.
Once the cause of the warning is removed, the WNG output will turn OFF automatically.
Present warnings can be checked using the **MEXE02**, **OPX-2A** or RS-485 communication.
You can also check the records of up to ten most recent warnings starting from the latest one, or clear the warning records.

Note You can also clear the warning records by turning off the driver power.

■ Warning list

Warning type	Warning code	Cause	Remedial action
Overflow	10	The deviation between the encoder counter value and command position reached the stepout detection band when the "Stepout detection action" parameter was set to "warning."	• Reduce the load, or increase the acceleration/deceleration rate. • Check the setting of "Stepout detection band" parameter. • Check the setting of "Encoder electronic gear" parameter.
Overheat	21	The temperature inside the driver exceeded the value set in the "Overheat warning" parameter.	Review the ventilation condition in the enclosure.
Overvoltage	22	• The internal voltage exceeded the value set in the "Overvoltage warning" parameter due to regeneration, etc. • The power supply voltage exceeded the value set in the "Overvoltage warning" parameter.	• If this alarm generates during operation, reduce the load or increase the acceleration/deceleration rate. • Check the power supply voltage.
RS-485 communication error	84	A RS-485 communication error was detected.	See "10 Detection of communication errors" on p.135.

3 Troubleshooting and remedial actions

During motor operation, the motor or driver may fail to function properly due to an improper speed setting or wiring. When the motor cannot be operated correctly, refer to the contents provided in this section and take appropriate action. If the problem persists, contact your nearest Oriental Motor sales office.

Phenomenon	Possible cause	Remedial action
• The motor is not excited. • The motor output shaft can be moved by hand.	The AWO input is turned ON (normally open).	• Turn the AWO input OFF and confirm that the motor will be excited. • Check the setting of the "AWO contact configuration" parameter.
	Connection error in the motor lead wires or power supply cable.	Check the connections between the driver, motor and power supply.
	The "Operating current" or "Standstill current" parameter is set wrong. If the current is too low, the motor torque will also be too low and operation will be unstable.	Return the "operating current" or "standstill current" to its initial setting and check.
The motor does not operate.	The STOP input is turned OFF (normally closed).	• Turn the STOP input ON. • Check the setting of the "STOP contact configuration" parameter.
	The position (distance) is not set in the operation data while positioning operation.	Check the operation data.
	The FWD input and RVS input are turned ON simultaneously in the continuous operation.	Check the status of FWD input and RVS input.
	Electromagnetic brake is holding (electromagnetic brake motor only).	Release the electromagnetic brake by turning the power on.
The motor rotates in the direction opposite to the specified direction.	The "Motor rotation direction" parameter is set wrong.	Check the setting of the "Motor rotation direction" parameter.
The gear output shaft rotates in the direction opposite to the motor.	A gear that rotates in the direction opposite to the motor shaft is used.	• With **TH** geared type, the gear rotates in the direction opposite to the motor when the gear ratio is 20 or 30. • All Harmonic geared types rotate in the direction opposite motor rotation.
Motor operation is unstable.	Connection error in the motor lead wires or power supply cable.	Check the connections between the driver, motor and power supply.
	The "Operating current" or "Standstill current" parameter is set wrong. If the current is too low, the motor torque will also be too low and operation will be unstable.	Return the "Operating current" or "Standstill current" parameter to its initial setting and check.
Loss of synchronization during acceleration or running.	The centers of the motor output shaft and load shaft are not aligned.	Check the connection condition of the motor output shaft and load shaft.
	The load or load fluctuation is too high.	Check for large load fluctuations during operation. If adjusting the operating speed to low and high torque eliminates the problem, it is necessary to review the load conditions.
	The starting speed is too high.	Lower the starting speed and set it again to a speed at which stable starting is possible.
	The acceleration/deceleration rate is too short.	Make the acceleration/deceleration rate longer in order to reset it to a time at which stable starting is possible.

Phenomenon	Possible cause	Remedial action
With the electromagnetic brake type, the electromagnetic brake does not hold the load.	DC power is supplied to the electromagnetic brake.	To hold the load with the electromagnetic brake while motor is stopped, turn OFF the power supply for electromagnetic brake.
Motor does not move the set amount.	Wrong motor step angle settings.	Check the "Motor step angle" parameter.

Note I/O signals can be monitored using the **MEXE02**, **OPX-2A** or RS-485 communication. Use these accessories to check the wiring conditions of I/O signals.

8 Appendix

This part explains cables and accessory that are used in combination with the products and method of control via GW protocol Version 1.

◆Table of contents

1 Cables 184

2 Accessory 185

3 Method of control via GW protocol Version 1.....186

3-1 Guidance.....186
3-2 Communication specifications.....189
3-3 Setting the switches.....190
3-4 Communication mode.....191
3-5 Communication timing.....192
3-6 Frame structures.....192
3-7 Control method selection.....195
3-8 Example of communication setting.....196
3-9 Command list.....199
3-10 Command types.....202
3-11 Command details.....203
3-12 Simultaneous send.....223
3-13 Group send.....223
3-14 Detection of communication errors.....225
3-15 Timing charts.....226

1 Cables

■ Communication cable for the support software

Be sure to purchase the communication cable for the support software when connecting a driver and PC in which the support software **MEXE02** has been installed.
This is a set of a PC interface cable and USB cable. The cable is connected to the USB port on the PC.
The **MEXE02** can be downloaded from Oriental Motor Website Download Page.

Model: **CC05IF-USB** [5 m (16.4 ft.)]

■ Extension cable

This cable is used to extend the wiring distance between the driver and motor.

Model	Length [m (ft.)]	Number of cores
CC05PK5	5 (16.4)	5
CC10PK5	10 (32.8)	

■ Connector lead wire

The lead wires come preassembled with a crimped connector for easy connection of a encoder and driver.

Model: **LC09A-006** [0.6 m (2 ft.)]

■ RS-485 communication cable

You can link drivers using this cable connected to the RS-485 communication connectors (CN6, CN7).

Model: **CC001-RS4** [0.1 m (0.3 ft.)]

2 Accessory

■ Data setter

The data setter lets you set data and parameters for your **CRK** Series built-in controller with ease and also functions as a monitor.

Model: **OPX-2A**

3 Method of control via GW protocol Version 1

GW protocol Version 1 is Oriental Motor's proprietary protocol at a fixed length of 9 bytes. Various functions such as motor operation, parameter read/write, monitoring and maintenance are available under this protocol.

3-1 Guidance

If you are new to the **CRK** Series built-in controller, read this section to understand the operating methods along the operation flow.

Note Before operating the motor, check the condition of the surrounding area to ensure safety.

STEP 1 Check the installation and connection

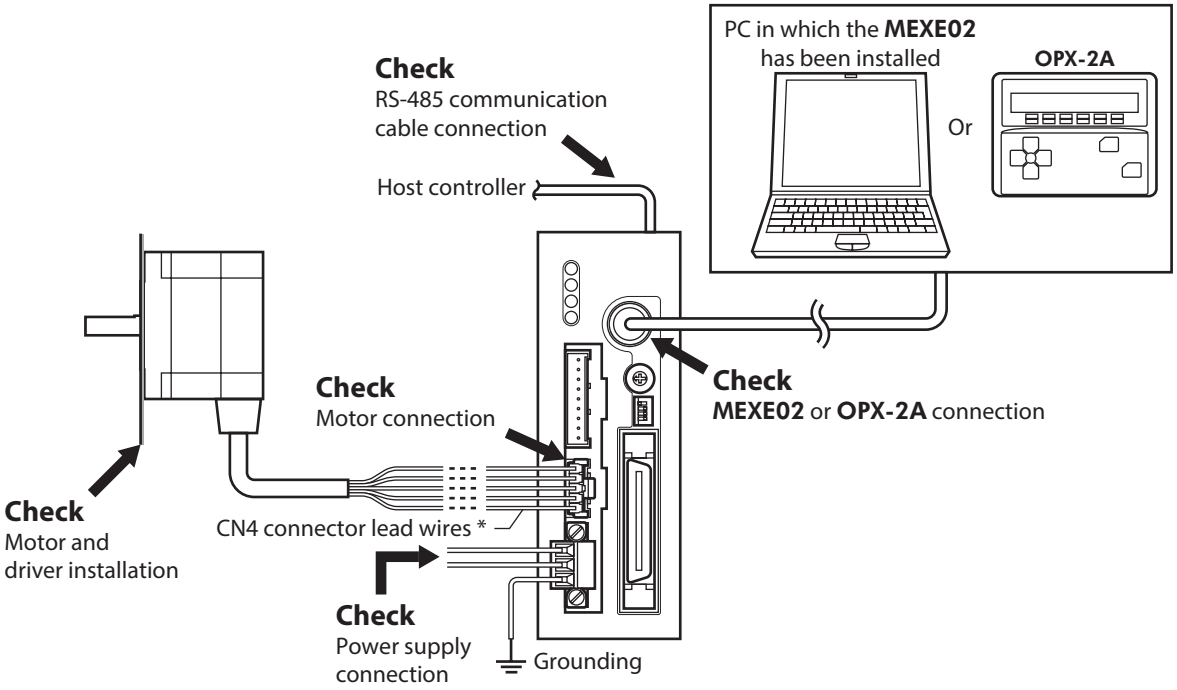

* Included item.

STEP 2 Set the switches

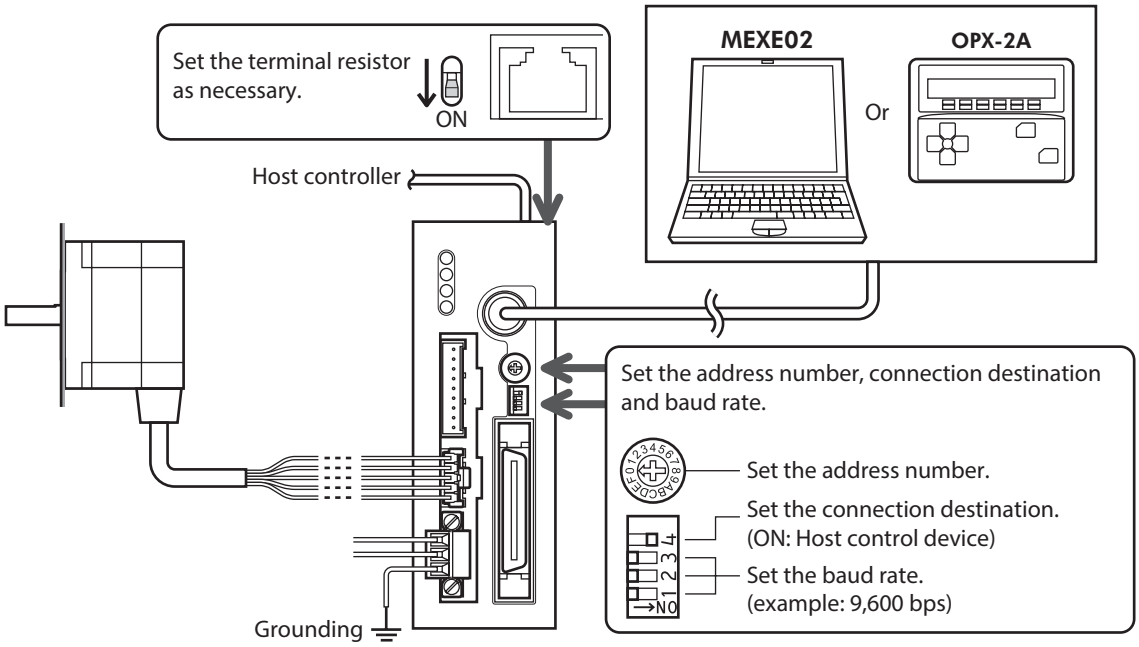

STEP 3 Turn on the power supply and set the parameters

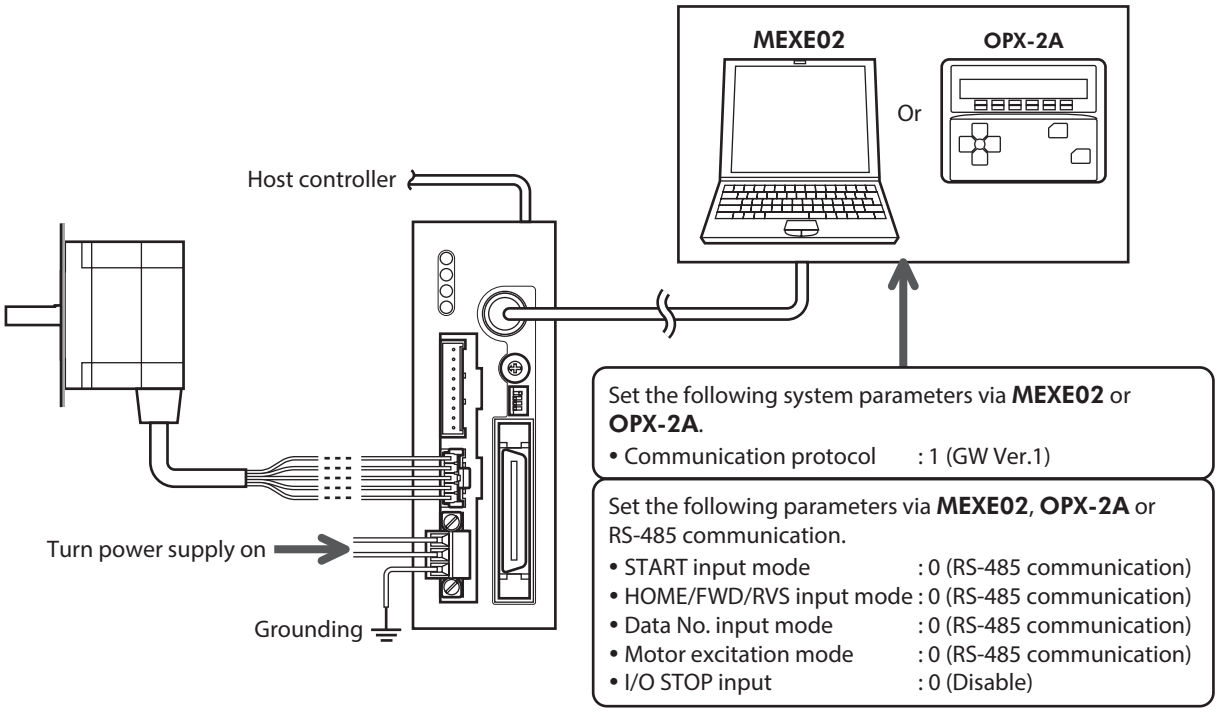

STEP 4 Cycle the power

System parameters will become effective only after the power is cycled. If you have changed any of the system parameters, be sure to cycle the power.

STEP 5 Operate the motor

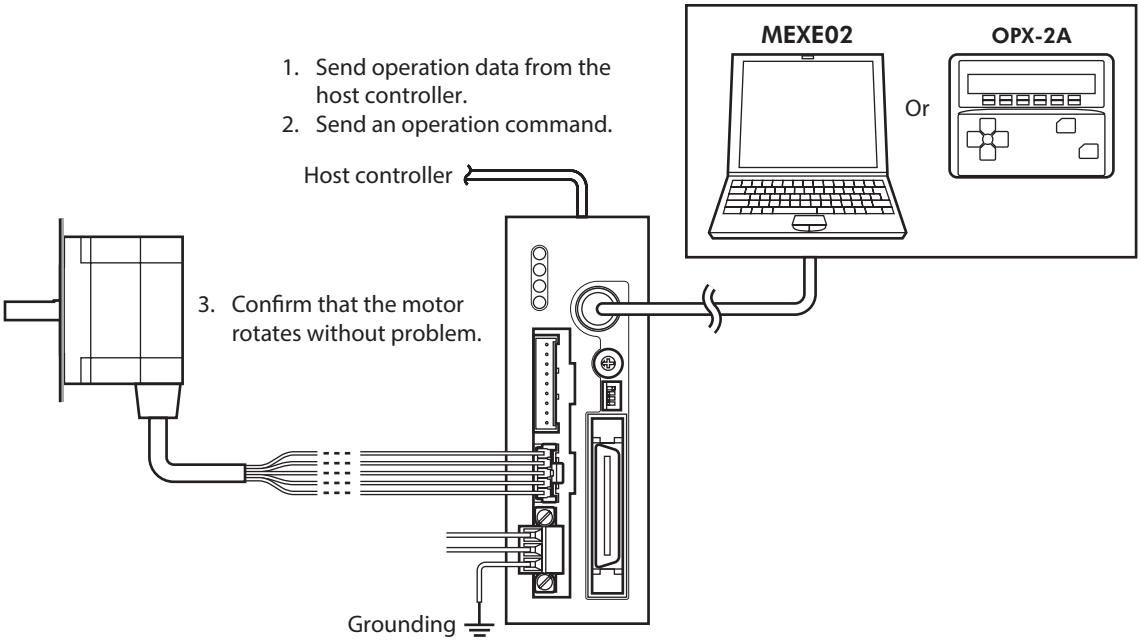

STEP 6 Were you able to operate the motor properly?

How did it go? Were you able to operate the motor properly? If the motor does not function, check the following points:

- Is any alarm present?
- Are the power supply, motor and RS-485 communication cable connected securely?
- Are the address number, baud rate and terminal resistor set correctly?
- Is the C-ERR LED lit?
- Is the C-DAT LED lit?

For more detailed settings and functions, refer to the following pages.

3-2 Communication specifications

Electrical characteristics	In conformance with EIA-485, straight cable Use a twisted pair cable (TIA/EIA-568B CAT5e or higher is recommended) and keep the total wiring distance including extension to 50 m (164 ft.) or less. *
Communication mode	Half duplex, Asynchronous mode (8 bits, 1 stop bit, no parity)
Baud rate	Selectable from 9,600 bps, 19,200 bps, 38,400 bps, 57,600 bps, 115,200 bps, 250,000 bps, 312,500 bps and 625,000 bps.
Protocol	9-byte fixed frame length, binary transfer
Connection pattern	Up to 31 drivers can be connected to one host controller.

* If the motor cable or power supply cable generates an undesirable amount of noise depending on the wiring or configuration, shield the cable or install a ferrite core.

■ Connection example

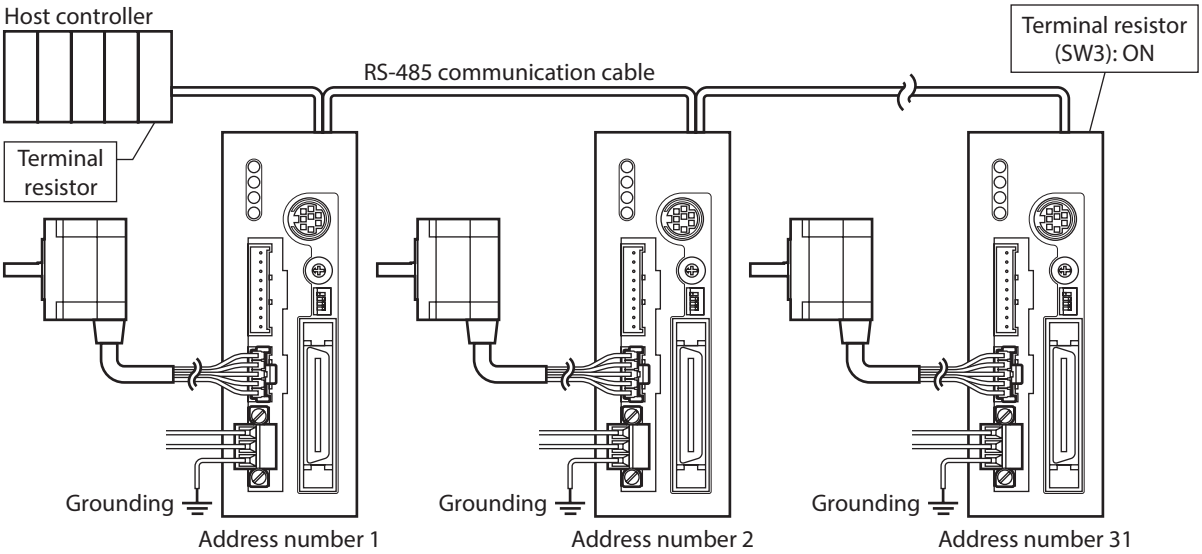

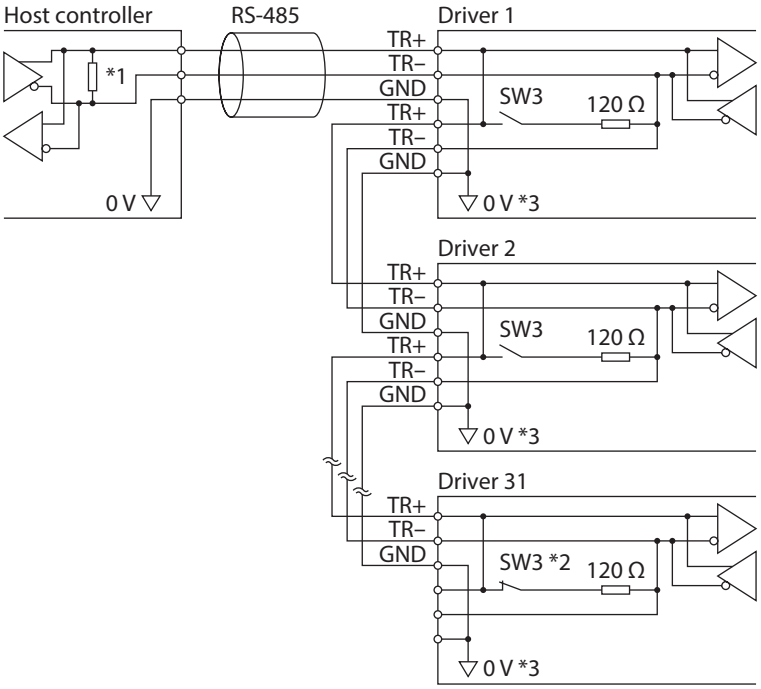

*1 Terminal resistor 120 Ω
*2 Turn the terminal resistor (SW3) to ON.
*3 The GND line is used in common with CN1 (not insulated).

3-3 Setting the switches

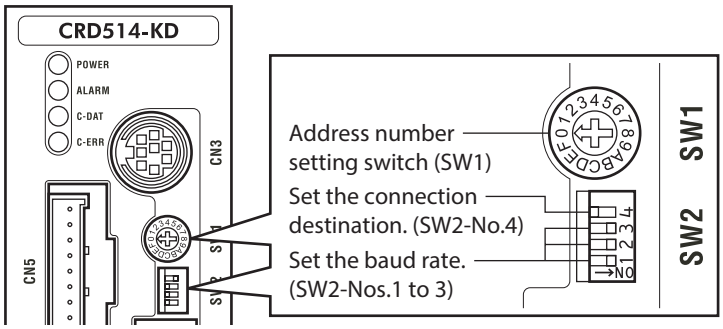

Note Be sure to turn off the driver power before setting the switches. If the switches are set while the power is still on, the new switch settings will not become effective until the driver power is cycled.

■ Address number

Using the address number setting switch (SW1) and "Communication axis number" parameter, set the address number.
If SW1 is set to "F," the address number set in the "Communication axis number" parameter is selected. (initial value: 15). Make sure each address number you set for each driver is unique.

Factory setting 0 (address number 0)

SW1	Address number
0	0
1	1
2	2
3	3
4	4
5	5

SW1	Address number
6	6
7	7
8	8
9	9
A	10
B	11

SW1	Address number
C	12
D	13
E	14
F	*

* Setting value of "Communication axis number" parameter.
The default value of the "Communication axis number" parameter is "15." Set the "Communication axis number" parameter using the **MEXE02** or **OPX-2A**.

■ Setting the connection destination

Set the SW2-No.4 of the function setting switch to ON. The GW protocol Version 1 is selected.

Factory setting OFF

■ Baud rate

Using the Nos.1 to 3 of the function setting switch (SW2), set the baud rate.
The baud rate to be set should be the same as the baud rate of the host controller.

Factory setting All ON (625,000 bps)

Baud rate (bps)	SW2-No.3	SW2-No.2	SW2-No.1
9,600	OFF	OFF	OFF
19,200	OFF	OFF	**ON**
38,400	OFF	**ON**	OFF
57,600	OFF	**ON**	**ON**
115,200	**ON**	OFF	OFF
250,000	**ON**	OFF	**ON**
312,500	**ON**	**ON**	OFF
625,000	**ON**	**ON**	**ON**

■ Terminal resistor

Use a terminal resistor for the driver located farthest away (positioned at the end) from the host controller.
Turn the terminal resistor setting switch (SW3) ON to set the terminal resistor for RS-485 communication (120 Ω).

Factory setting OFF (terminal resistor disabled)

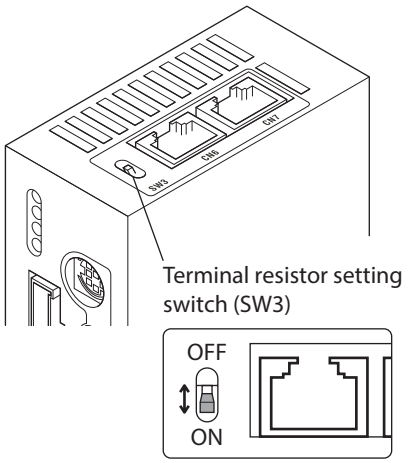

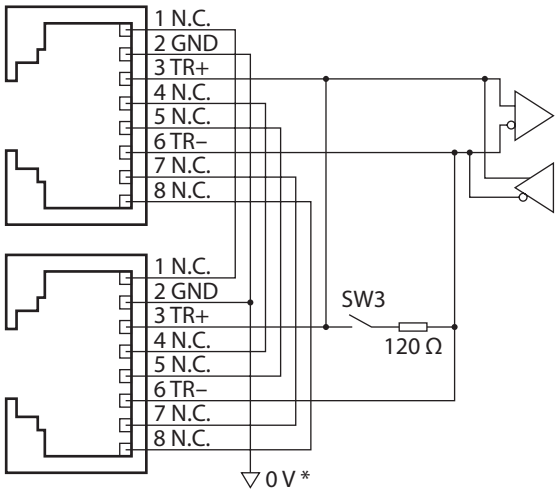

SW3	Terminal resistor (120 Ω)
OFF	Disabled
ON	Enabled

* The GND line is used in common with CN1 (not insulated).

3-4 Communication mode

The communication mode of GW protocol version 1 is that a host controller is as the host control device and the driver is as the device, and a frame response is sent back to a frame from the host control device.
Frames are sent in one of three methods.

■ Individual send

Send a frame to each device.

■ Simultaneous send

Send a frame to all devices simultaneously. In simultaneous send, no response is returned from the devices. The operation specifications and commands that can be sent via simultaneous send are limited.

■ Group send

A frame is sent simultaneously to all of the devices comprising one group. Each group consists of one main axis and one or more subordinate axis, and only the main axis returns a response. The commands that can be sent via group send are limited.

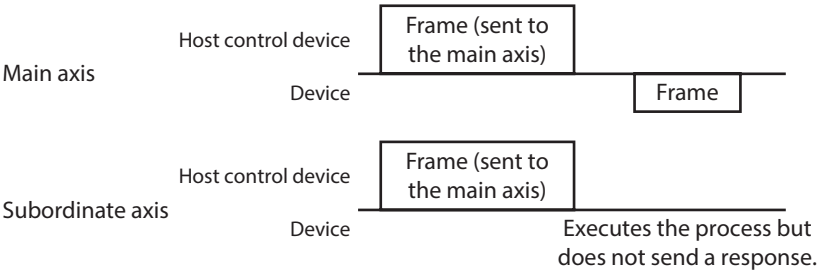

3-5 Communication timing

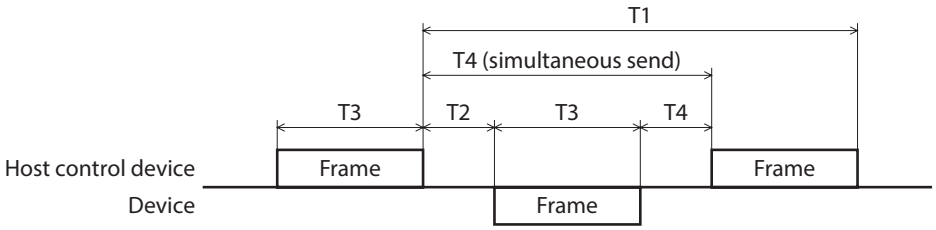

Receive period (T1)	The period of the received frame is monitored. If no frame is received after an elapse of the time set by the "Receive period" command, a communication timeout alarm will generate. Even when a frame is not sent to the applicable unit, once a BCC-matching frame is received the receive period counter will be cleared and counting will start fresh.
Response interval (T2)	The interval after the host control device receives a frame until the device starts sending. This interval can be set using the "Response interval" command.
Receive monitor period (T3)	The time needed for the host control device or device to send one entire frame from the header to BCC is monitored. If no BCC is received after an elapse of the time set by the "Receive monitoring" command, the device will discard the frame and wait for the header.
Send interval (T4)	The interval after the device receives a frame until the host control device sends the next frame. This interval must be 0.5 ms or longer in the case of individual send or group send, or 5 ms or longer in the case of simultaneous send.

3-6 Frame structures

The frame structure used for sending data from the host control device to the device is shown below.

Header	Action entry	Mode	Command	Data 1	Data 2	Data 3	Data 4	BCC

The frame structure used for sending data from the device to the host control device is shown below.

Header	Action entry	Mode/NACK	Command	Data 1	Data 2	Data 3	Data 4	BCC

■ Header

Host control device: Specify the receiving device.
Device: Change the sender to "device" and send a response.

bit	Function	Description	Behavior
7	"0" specification	System-reserved bit	–
6	Sender	Specify the sender. *1	0: Device 1: Host control device
5	Send specification	Specify the send mode from the host control device. *2	0: Individual send 1: Simultaneous send
4	Address number	Specify the address number of the device using five bits.	00h (address number 0) to 1Fh (address number 31)
3			
2			
1			
0			

*1 Send the frame after setting the host controller to "1: Host control device."
*2 Simultaneous send can be specified only for the host control device. If simultaneous send is specified, send the frame after setting the address number to "0."

■ Action entry

Host control device: Specify the operation to be performed by the device.
Device: Sends directly the action entry data received from the host control device.

bit	Function	Description	Behavior
7	"0" specification	System-reserved bit *1	–
6	WRITE/READ	Write or read data. *2	0: WRITE 1: READ
5	STOP	Stop the motor. *3 *4	0: No action 1: Stop
4	Not used	–	–
3	HOME	Perform return-to-home operation. *4 *5	0: No action 1: Start operation
2	RVS	Perform continuous operation in the reverse direction. *4 *6 *7	0: Deceleration stop 1: Operation
1	FWD	Perform continuous operation in the forward direction. *4 *6 *7	
0	START	Perform positioning operation. *4 *5 *7	0: No action 1: Start operation

*1 When "1" is specified, a reception failure will be recognized. Accordingly, the frame will be discarded and NACK will be returned.
*2 Specify whether it is a WRITE or READ command. Other operation command bits are executed regardless of the WRITE/READ specification.
*3 The stopping method can be set using the "STOP action (13h)" command.
*4 The operation command bits have priorities. Specifically, "1" is detected in the order of STOP > FWD/RVS > HOME > START.
*5 Operation is started at the ON edge of this bit (when the bit changes from 0 to 1). Once the operation has started, return this bit to "0."
*6 Operation continues while this bit remains "1." Returning it to "0" will cause the motor to decelerate to a stop.
*7 Select the operation data number using the "Data number selection" command and specify it using the mode command.

Note Commands (WRITE/READ) and operation commands (STOP, HOME, RVS, FWD, START) can be sent simultaneously. Since the operation is started after writing, data setting and operation can be performed simultaneously.

■ Mode

Host control device: Specify the data number. If any out-of-range mode is specified, a reception failure will be recognized. Accordingly, the frame will be discarded and NACK will be returned.

Mode	Description
00h to 3Fh	If the command requires a data number, specify an applicable data number. If the command does not require any data number, specify "00h."

Device: If the communication is performed successfully, the host control device mode will be returned directly.

Mode	Description
00h to 3Fh	The host control device mode will be returned directly (successful reception).
FFh	This indicates a reception failure (NACK).

If any of the following conditions are met, the frame will be discarded and NACK will be returned. The reason for NACK can be checked by the applicable communication error record.

- The system reservation bit of the operation specification is "1."
- An undefined mode is specified.
- An undefined command is specified.
- A command that cannot WRITE is specified.
- A command that cannot READ is specified.
- The value in the data area was outside the specified range.
- The command was specified in one of the following conditions:
  · An EEPROM error alarm was present.
  · Downloading or initialization is currently in progress via the **MEXE02**.
  · The **OPX-2A** is currently connected in a mode other than the monitor mode.
  · Internal processing was in progress.

■ Command

Host control device: Specify the command.
Device: Sends directly the command received from the host control device.

The commands are classified into the following six types:

- Operation data .....WRITE/READ operation data. (These commands can also be set using the **MEXE02** or **OPX-2A**.)
- Parameter .....WRITE/READ parameter. (These commands can also be set using the **MEXE02** or **OPX-2A**.)
- Operation .....Specify operations.
- Monitor .....Monitor the current speed, position, I/O status, etc.
- Maintenance .....Used in maintenance processes.
- Special .....Set group send.

See p.203 for command details.

■ Data area

Specify the value to be set in the command. Specify data in the signed 4 byte binary format.
The 4 byte data is expressed in the little endian order.
Host control device: With a WRITE command, specify the data to be written.
Device: With a WRITE command, the host control device data will be returned directly.
With a READ command, the data that has been read will be returned.
If the reception failed (NACK), the host control device data will be returned directly. Any numerical value included in the host control device data will be ignored.

Example) When the "01234567h" is set in the data area

The data is sent from the lower byte, so the following values will be stored in the data area:

Data 1	Data 2	Data 3	Data 4
67h	45h	23h	01h

Note If the value set in a WRITE command is outside the setting range for the applicable command, the frame will be discarded and NACK will be returned. If a function is assigned to any bit in the data area of the command [Example: I/O status (39h)], "0" will always be returned whenever a bit to which no function is assigned is read.

■ BCC

A horizontal parity used to detect errors in the frame data.
The CRC is a logical sum of all bytes from the header to data 4, calculated by the exclusive-OR gate.

■ Example of frame transmission/reception

An example of setting the position (travel amount) for operation data No. 1 to 500 pulses is given.

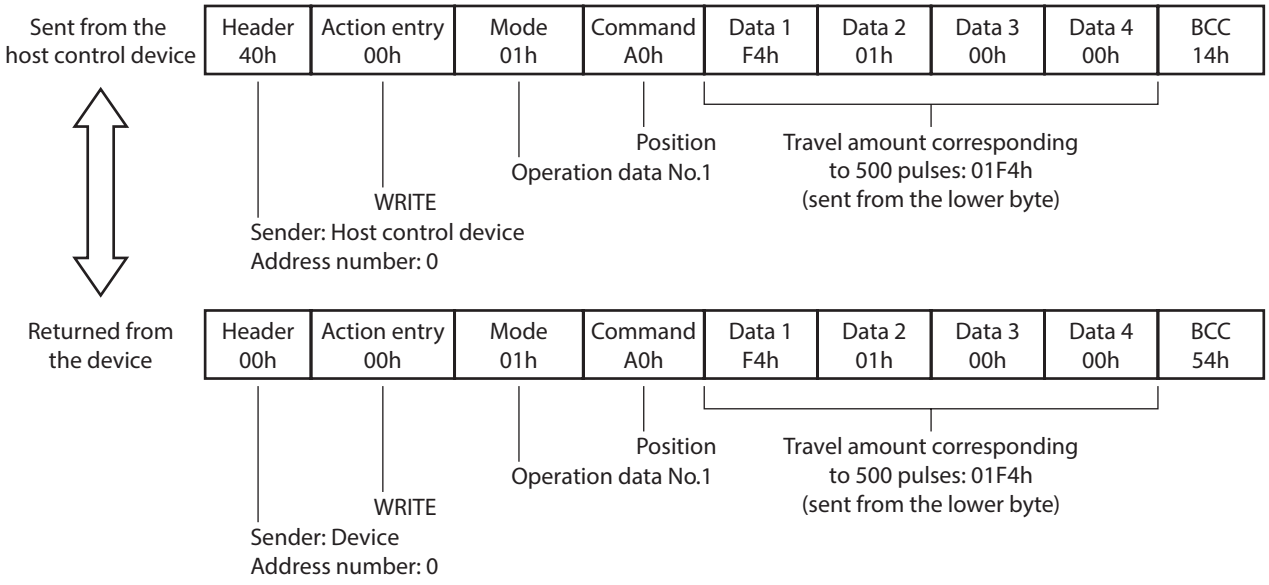

3-7 Control method selection

■ Setting the communication protocol

To implement controls using GW Protocol Version 1, set the "Communication protocol" parameter to "1: GW Ver. 1" using the **MEXE02** or **OPX-2A**.

Note The "Communication protocol" parameter cannot be set via RS-485 communication.

■ Selection from I/O control and RS-485 communication control

Prior to shipment, I/O control is set as the method to select the operation command input method or operation data number. To change this control method to RS-485 communication, change the applicable settings using the **MEXE02**, **OPX-2A** or via RS-485 communication.
The table lists the items whose control can be switched between I/O and RS-485 communication. You can use both methods simultaneously, such as controlling the operation via RS-485 communication and inputting a stop signal via I/O.

Item	Method of control via I/O	Method of control via RS-485 communication	This command is used to change the control method.
Positioning operation	START input	START (bit 0) of action entry	START input mode
Excitation control	AWO input	"Excitation control" command	Motor excitation mode
Stop	STOP input	STOP (bit5) of action entry *	I/O STOP input
Select data No.	M0 to M5 input	"Data number selection" command	Data number input mode
Return-to-home operation	HOME input	HOME (bit3) of action entry	HOME/FWD/RVS input mode
Continuous operation (forward)	FWD input	FWD (bit1) of action entry	
Continuous operation (reverse)	RVS input	RVS (bit2) of action entry	
Reset alarm	ALM-RST input	"Alarm reset" command	None (Both are always effective)
Position preset	P-PRESET input	"Position preset" command	

* The operation specification STOP is always effective. Even when the "I/O STOP input" parameter is set to "Enable", the motor will stop when the operation specification STOP is executed.

3-8 Example of communication setting

The data required for each operation is set using the **MEXE02**, **OPX-2A** or via RS-485 communication.

■ Positioning operation

See p.63 for details on the positioning operation.

Command	Name	Setting range	Initial value
0Eh	Dwell time	0 to 50,000 (1=0.001 s)	0
0Fh	Sequential positioning	0: Disable 1: Enable	0
10h	Positioning mode	0: INC (incremental) 1: ABS (absolute)	0
11h	Operating mode	0: Single 1: Link 2: Link2	0
80h	Starting speed *1	1 to 500,000 (Hz)	100
82h	Acceleration rate *2	0.001 to 1,000.000 (ms/kHz)	30.000
83h	Deceleration rate *2		
88h	Operating speed	1 to 500,000 (Hz)	1,000
A0h	Position	–8,388,608 to +8,388,607 (step)	0

*1 The starting speed is common to all operation data used in a positioning operation and continuous operation. Other commands can be set for each operation data.
*2 This command is effective when the "Acceleration (deceleration) rate type" parameter is set to "separate." If this parameter is set to "common", the values of common acceleration rate and common deceleration rate become effective (initial value: common).

Note

- The excitation condition of the motor at the power ON varies depending on the "C-ON logic configuration" parameter. The motor is not excited if the "C-ON logic configuration" parameter is set to "0," and excited if the parameter is set to "1."
- The factory setting of the STOP input is normally closed. Accordingly, turn the I/O STOP input ON before commencing the operation if the "I/O STOP input" parameter is set to "enable." The operation cannot be performed if the STOP input remains OFF. For your information, the STOP input logic can be changed using the "STOP contact configuration" command.
- The motor will operate at the starting speed if the operating speed is below the starting speed.

● Setting example

How to perform the following positioning operation is explained as an example.

- Address number: 0
- Position (distance): 1,000 step
- Operating speed: 5,000 Hz

1. Set the respective parameters as follows using the **MEXE02**, **OPX-2A** or via RS-485 communication:

Parameter name	Setting
START input mode	0: RS-485 communication
I/O STOP input	0: Disable
Motor excitation mode	0: RS-485 communication
Data No. input mode	0: RS-485 communication

2. Send the following frame to turn ON the motor excitation.

Header	Action entry	Mode	Command	Data 1	Data 2	Data 3	Data 4	BCC
40h	00h	00h	22h	01h	00h	00h	00h	63h

3. Send the following frame to set the position (travel amount) for operation number No. 1 to 1,000 steps.

Header	Action entry	Mode	Command	Data 1	Data 2	Data 3	Data 4	BCC
40h	00h	01h	A0h	E8h	03h	00h	00h	0Ah

4. Send the following frame to set the operating speed for operation data No. 1 to 5,000 Hz.

Header	Action entry	Mode	Command	Data 1	Data 2	Data 3	Data 4	BCC
40h	00h	01h	88h	88h	13h	00h	00h	52h

5. Send the following frame to select operation data No. 1 and change the START bit to 1 (operation start). Positioning operation will start at the ON edge of the bit (when the bit changes from 0 to 1).

Header	Action entry	Mode	Command	Data 1	Data 2	Data 3	Data 4	BCC
40h	01h	01h	00h	00h	00h	00h	00h	40h

6. Once the positioning operation has started, send the following frame to return the START bit to 0 (no operation).

Header	Action entry	Mode	Command	Data 1	Data 2	Data 3	Data 4	BCC
40h	00h	01h	00h	00h	00h	00h	00h	41h

■ Return-to-home operation

See p.72 for details on the return-to-home operation.

Command	Name	Setting range	Initial value
12h	Home-seeking mode	0: 2 sensors 1: 3 sensors	1
93h	Starting speed of home-seeking	1 to 500,000 (Hz)	100
94h	Acceleration/deceleration rate of home-seeking	0.001 to 1,000.000 (ms/kHz)	30.000
95h	Operating speed of home-seeking	1 to 500,000 (Hz)	1,000
A8h	Position offset of home-seeking	–8,388,608 to +8,388,607 (step)	0
A9h	Starting direction of home-seeking	0: – direction 1: + direction	1
AAh	SLIT detection with home-seeking	0: Disable 1: Enable	0
ABh	TIM signal detection with home-seeking	0: Disable 1: Enable (TIM) 2: Enable (ZSG) *	0
ACh	Backward steps in 2-sensor mode home-seeking	0 to 32,767 (step)	200

* This signal is used when an encoder is connected.

Note

- The excitation condition of the motor at the power ON varies depending on the "C-ON logic configuration" parameter. The motor is not excited if the "C-ON logic configuration" parameter is set to "0," and excited if the parameter is set to "1."
- The factory setting of the STOP input is normally open. Accordingly, turn the I/O STOP input ON before commencing the operation if the "I/O STOP input" parameter is set to "enable." The operation cannot be performed if the STOP input remains OFF. For your information, the STOP input logic can be changed using the "STOP contact configuration" command.
- The motor will operate at the starting speed if the operating speed is below the starting speed.

● Setting example

How to perform the following return-to-home operation is explained as an example.

- Address number: 0

1. Set the respective parameters as follows using the **MEXE02**, **OPX-2A** or via RS-485 communication:

Parameter name	Setting
I/O STOP input	0: Disable
Motor excitation mode	0: RS-485 communication
HOME/FWD/RVS input mode	0: RS-485 communication
Data No. input mode	0: RS-485 communication

2. Send the following frame to turn ON the motor excitation.

Header	Action entry	Mode	Command	Data 1	Data 2	Data 3	Data 4	BCC
40h	00h	00h	22h	01h	00h	00h	00h	63h

3. Send the following frame to change the HOME bit to 1 (operation start).
Return-to-home operation will start at the ON edge of the bit (when the bit changes from 0 to 1).

Header	Action entry	Mode	Command	Data 1	Data 2	Data 3	Data 4	BCC
40h	08h	00h	00h	00h	00h	00h	00h	48h

4. Once the return-to-home operation has started, send the following frame to return the HOME bit to 0 (no operation).

Header	Action entry	Mode	Command	Data 1	Data 2	Data 3	Data 4	BCC
40h	00h	00h	00h	00h	00h	00h	00h	40h

■ Continuous operation

See p.77 for details on the continuous operation.

Command	Name	Setting range	Initial value
80h	Starting speed *1	1 to 500,000 (Hz)	100
82h	Acceleration rate *2	0.001 to 1,000.000 (ms/kHz)	30.000
83h	Deceleration rate *2		
88h	Operating speed	1 to 500,000 (Hz)	1,000

*1 The starting speed is common to all operation data used in a positioning operation and continuous operation. Other commands can be set for each operation data.
*2 This command is effective when the "Acceleration (deceleration) rate type" parameter is set to "separate." If this parameter is set to "common", the values of common acceleration rate and common deceleration rate become effective. (initial value: common)

Note

- The excitation condition of the motor at the power ON varies depending on the "C-ON logic configuration" parameter. The motor is not excited if the "C-ON logic configuration" parameter is set to "0," and excited if the parameter is set to "1."
- The factory setting of the STOP input is normally open. Accordingly, turn the I/O STOP input ON before commencing the operation if the "I/O STOP input" parameter is set to "enable." The operation cannot be performed if the STOP input remains OFF. For your information, the STOP input logic can be changed using the "STOP contact configuration" command.
- The motor will operate at the starting speed if the operating speed is below the starting speed.

● Setting example

How to perform the following continuous operation is explained as an example.
- Access number: 0
- Rotation direction: Forward
- Operating speed: 5,000 Hz

1. Set the respective parameters as follows using the **MEXE02**, **OPX-2A** or via RS-485 communication:

Parameter name	Setting
I/O STOP input	0: Disable
Motor excitation mode	0: RS-485 communication
HOME/FWD/RVS input mode	0: RS-485 communication
Data No. input mode	0: RS-485 communication

2. Send the following frame to turn ON the motor excitation.

Header	Action entry	Mode	Command	Data 1	Data 2	Data 3	Data 4	BCC
40h	00h	00h	22h	01h	00h	00h	00h	63h

3. Send the following frame to set the operating speed for operation number No. 1 to 5,000 Hz.

Header	Action entry	Mode	Command	Data 1	Data 2	Data 3	Data 4	BCC
40h	00h	01h	88h	88h	13h	00h	00h	52h

4. Send the following frame to select operation data No. 1 and change the FWD bit to 1 (operation start). Continuous operation will start.

Header	Action entry	Mode	Command	Data 1	Data 2	Data 3	Data 4	BCC
40h	02h	01h	00h	00h	00h	00h	00h	43h

5. To stop the continuous operation, send the following frame to return the FWD bit to 0 (deceleration stop).

Header	Action entry	Mode	Command	Data 1	Data 2	Data 3	Data 4	BCC
40h	00h	01h	00h	00h	00h	00h	00h	41h

3-9 Command list

Command No.	Command name	WRITE/ READ	Mode (Dec)	Data area	Initial value	Type
00h	No action	R	0	–	–	Operation
	Data number selection	W	0 to 63			
01h	Receive period	W/R	0	0: Not monitored 1 to 999: 0.01 to 9.99 sec. (1=0.01 sec.)	0	Parameter
02h	Response interval			0 to 1,000 (ms)	50	
03h	Receive monitoring			1 to 999: 0.01 to 9.99 sec. (1=0.01 sec.)	10	
04h	OUT1 signal mode selection			See table on p.202.	5	
05h	OUT2 signal mode selection				7	
06h	OUT3 signal mode selection				8	
07h	OUT4 signal mode selection				9	
08h	HOME/P-PRESET input switching			0: HOME 1: P-PRESET	0	
0Bh	Group operation			0: Disable 1: Enable	1	Special
0Ch	Group			–1: Individual send 0 to 31: Specify a group.	–1	
0Dh	Communication timeout action			0: Immediate stop 1: Decelerate stop	1	Parameter
0Eh	Dwell time		1 to 63	0 to 50,000 (1=0.001 s)	0	Operation data
0Fh	Sequential positioning			0: Disable 1: Enable		
10h	Positioning mode			0: INC (incremental) 1: ABS (absolute)		
11h	Operating mode			0: Single 1: Link 2: Link2		
12h	Home-seeking mode		0	0: 2 sensors 1: 3 sensors	1	Parameter
13h	STOP action			0: Immediate stop 1: Decelerate stop 2: Immediate stop & Current OFF 3: Decelerate stop & Current OFF		

Command No.	Command name	WRITE/ READ	Mode (Dec)	Data area	Initial value	Type
14h	Overtravel action	W/R	0	0: Immediate stop 1: Decelerate stop	0	Parameter
1Ah	LS contact configuration			0: Make (N.O.) 1: Brake (N.C.)	0	
1Bh	HOMES contact configuration					
1Ch	SLIT contact configuration					
1Dh	STOP contact configuration				1	
1Eh	AWO contact configuration				0	
1Fh	C-ON logic configuration			0: 0=Not excited, 1=Excited 1: 0=Excited, 1=Not excited	0	
20h	Clear counter	W		–	–	Operation
21h	Reset alarms					
22h	Excitation control			0: 0=Not excited, 1=Excited if the "C-ON logic configuration" parameter is 0 1: 0=Excited, 1=Not excited if the "C-ON logic configuration" parameter is 1		
23h	Preset position			–		
24h	Preset encoder counter *					
25h	Clear alarm records	W		1: Execute	–	Maintenance
26h	Clear warning records					
27h	Clear communication error records					
32h	Remote output	W/R		0: OFF (photocoupler un-energized) 1: ON (photocoupler energized)	0	Operation
35h	Remaining dwell time	R		0 to 50,000 (1=0.001 s)	–	Monitor
36h	Display selection data number			00h to 3Fh (0 to 63)		
37h	Display operation data number					
39h	I/O status			0: OFF (photocoupler un-energized) 1: ON (photocoupler energized)		
3Ch	Driver status			–		
3Dh	Communication error record		0 to 10			
3Eh	Alarm record					
3Fh	Warning record					
40h	Operating current	W/R	0	5 to 100 (%)	100	Parameter
41h	Standstill current			5 to 50 (%)	50	
43h	Motor rotation direction			0: +direction=CCW 1: +direction=CW	1	
44h	Motor step angle			0 to 15	0	
48h	Batch non-volatile memory write	W		1: Execute	–	Maintenance
49h	Batch all data initialization					
4Ah	Batch non-volatile memory read					
4Bh	Encoder electronic gear A *	W/R		1 to 250,000	500	Parameter
4Ch	Encoder electronic gear B *					

Command No.	Command name	WRITE/ READ	Mode (Dec)	Data area	Initial value	Type
80h	Starting speed	W/R	0	1 to 500,000 (Hz)	100	Parameter
82h	Acceleration rate		1 to 63	0.001 to 1,000.000 (ms/kHz)	30.000	Operation data
83h	Deceleration rate					
88h	Operating speed			1 to 500,000 (Hz)	1,000	
8Bh	Command speed	R	0	–500,000 to 500,000 (Hz)	–	Monitor
8Dh	Acceleration (deceleration) rate type	W/R		0: Common 1: Separate	0	Parameter
8Eh	Common acceleration rate			1 to 1,000,000 (1=0.001 ms/kHz)	30.000	
8Fh	Common deceleration rate					
90h	JOG starting speed			1 to 500,000 (Hz)	100	
91h	JOG acceleration (deceleration) rate			0.001 to 1,000.000 (ms/kHz)	30.000	
92h	JOG operating speed			1 to 500,000 (Hz)	1,000	
93h	Starting speed of home-seeking				100	
94h	Acceleration (deceleration) rate of home-seeking			0.001 to 1,000.000 (ms/kHz)	30.000	
95h	Operating speed of home-seeking			1 to 500,000 (Hz)	1,000	
98h	HOME/FWD/RVS input mode			0: RS-485 communication 1: I/O	1	
99h	START input mode					
9Ah	I/O STOP input					
9Bh	Motor excitation mode					
9Ch	Data No. input mode					
A0h	Position		1 to 63	–8,388,608 to +8,388,607 (step)	0	Operation data
A1h	Command position	R	0	–2,147,483,648 to +2,147,483,647 (step)	–	Monitor
A2h	Encoder counter *					
A3h	Encoder counter preset value *	W/R		–8,388,608 to +8,388,607 (step)	0	Parameter
A4h	Preset position					
A5h	Area 1					
A6h	Area 2					
A8h	Position offset of home-seeking					
A9h	Starting direction of home-seeking			0: Negative direction 1: Positive direction	1	
AAh	SLIT detection with home-seeking			0: Disable 1: Enable	0	
ABh	TIM signal detection with home-seeking			0: Disable 1: Enable (TIM) 2: Enable (ZSG) *	0	
ACh	Backward steps in 2-sensor mode home-seeking			0 to 32,767 (step)	200	
B1h	Overvoltage warning			250 to 350 (1=0.1 V)	310	
B2h	Overheat warning			40 to 85 (°C)	85	
B7h	Software overtravel			0: Disable 1: Enable	1	
B8h	Positive software limit			–8,388,608 to +8,388,607 (step)	8,388,607	
B9h	Negative software limit				–8,388,608	

Command No.	Command name	WRITE/ READ	Mode (Dec)	Data area	Initial value	Type
BAh	Hardware overtravel detection	W/R	0	0: Disable 1: Enable	1	Parameter
BBh	Stepout detection band *			1 to 3,600 (1=0.1 deg)	72	
BCh	Stepout detection action *			0: No action (alarm/warning not present) 1: Warning 2: Alarm	0	
BDh	Stepout detection *			0: Disable 1: Enable	0	
CAh	Display mode of the data setter speed			0: Signed 1: Absolute	0	
CBh	The data setter editing mode			0: Disable 1: Enable	1	

* This command is used when an encoder is connected.

■ Setting range of the "OUT signal mode selection" parameter

5: AREA 6: TIM 7: READY	8: WNG 9: HOME-P 10: ZSG *	11: R-OUT1 12: R-OUT2 13: STEPOUT *	14: O.H. 15: R-OUT3 16: R-OUT4

* This signal is used when an encoder is connected.

3-10 Command types

Note Data set via RS-485 communication is stored in the driver's RAM. The data saved in the RAM will be erased once the power is turned off. To retain the data in the RAM, write it to the non-volatile memory. For details, refer to the "Batch non-volatile memory write" command (p.213).

■ Operation data

These commands are used to WRITE/READ operation data. They can also be set using the **MEXE02** or **OPX-2A**.
If the value set in a WRITE command is outside the setting range for the applicable command, the frame will be discarded and NACK will be returned.
If data is written under any of the following conditions, the command execution will fail. Accordingly, the frame will be discarded and NACK will be returned. If data is read under any of these conditions, an incorrect value may be read. For these reasons, do not write or read data under these conditions.

- An EEPROM error alarm was present.
- Downloading or initialization is currently in progress via the **MEXE02**.
- The **OPX-2A** is currently connected in a mode other than the monitor mode.
- Internal processing was in progress. (S-BSY is ON.)

■ Parameter

These commands are used to WRITE/READ parameter. They can also be set using the **MEXE02** or **OPX-2A**.
If the value set in a WRITE command is outside the setting range for the applicable command, the frame will be discarded and NACK will be returned.
If data is written under any of the following conditions, the command execution will fail. Accordingly, the frame will be discarded and NACK will be returned. If data is read under any of these conditions, an incorrect value may be read. For these reasons, do not write or read data under these conditions.

- An EEPROM error alarm was present.
- Downloading or initialization is currently in progress via the **MEXE02**.
- The **OPX-2A** is currently connected in a mode other than the monitor mode.
- Internal processing was in progress. (S-BSY is ON.)

■ Maintenance

These commands are used to clear alarm or warning records or perform batch processing of the non-volatile memory. When a maintenance command is executed, the internal process in-progress bit (S-BSY) will turn ON.
If data is written under any of the following conditions, the command execution will fail. Accordingly, the frame will be discarded and NACK will be returned. (However, this does not apply to the "Communication error record clear" command.)

- An EEPROM error alarm was present. (The "Batch non-volatile memory initialization" command can be executed in this condition.)
- Downloading or initialization is currently in progress via the **MEXE02**.
- The **OPX-2A** is currently connected in a mode other than the monitor mode.
- Internal processing was in progress. (S-BSY is ON.)

■ Operation

These commands specify operations. The setting will be reflected immediately after the reception analysis.

■ Monitor

These commands are used to monitor the current speed, position, I/O status, etc. After the reception analysis, the applicable status will be returned.

■ Special

Set group send. The setting will be reflected immediately after the reception analysis.

3-11 Command details

■ No action (00h)

Description	Use this command if you don't want to process any command.		
Action entry	READ (If WRITE is specified, the "Data number selection" command will be executed.)		
Type	Operation command	Mode	00h
Data area	The data area values will be ignored. The same value as the data sent from the host control device will be returned.		

■ Data number selection (00h)

Description	Selects operation data No. for positioning operation or continuous operation.
Action entry	WRITE (If READ is specified, the "No action" command will be executed.)
Mode	00h to 3Fh (0 to 63) Specifies the operation data number. Since the operation data number is refreshed by the "Data number selection" command, it will be retained until the next "Data number selection" command is set.
Type	Operation command
Data area	The data area values will be ignored.

■ Receive period (01h)

Description	Set the receive period for RS-485 communication.		
Action entry	WRITE: The setting will become effective immediately after valid data has been received. READ		
Type	Parameter command	Mode	00h
Data area	0: Not monitored 1 to 999: 0.01: 9.99 sec. (1 = 0.01 sec.)	Initial value	0

Note Set the receive period to "receive monitoring (T3) × 2 + response interval (T2) + send interval (T4)" or more. If this formula is not satisfied, a communication timeout error may occur during communication.

■ Response interval (02h)

Description	Sets the response period for RS-485 communication.		
Action entry	WRITE: The setting will become effective immediately after valid data has been received. READ		
Type	Parameter command	Mode	00h
Data area	0 to 1,000 (ms) If 0 ms is set, sending will start immediately.	Initial value	50

■ Receive monitor period (03h)

Description	Sets the receive monitor period for RS-485 communication.		
Action entry	WRITE: The setting will become effective immediately after valid data has been received. READ		
Type	Parameter command	Mode	00h
Data area	1 to 999: 0.01: 9.99 sec. (1 = 0.01 sec.)	Initial value	10

■ OUT1 to 4 signal mode selection (04h to 07h)

Description	Sets the function assigned to the OUT1 to OUT4 output.					
Action entry	WRITE: The setting will become effective immediately after valid data has been received. READ					
Type	Parameter command				Mode	00h
Data area	5: AREA 6: TIM 7: READY	8: WNG 9: HOME-P 10: ZSG *	11: R-OUT1 12: R-OUT2 13: STEPOUT *	14: O.H. 15: R-OUT3 16: R-OUT4	Initial value	OUT1: 5 OUT2: 7 OUT3: 8 OUT4: 9

* These signals are used when an encoder is connected.

■ HOME/P-PRESET input mode (08h)

Description	Sets whether to use HOME or P-PRESET input.		
Action entry	WRITE: The setting will become effective immediately after valid data has been received. READ		
Type	Parameter command	Mode	00h
Data area	0: HOME 1: P-PRESET	Initial value	0

■ Group operation (0Bh)

Description	Use this command for group send. This command sets whether to enable or disable operation specifications and operation commands sent to each unit.		
Action entry	WRITE/READ		
Type	Special command	Mode	00h
Data area	0: Disable 1: Enable See table next.	Initial value	1

Setting	Command to individual unit		Command to group	
	Action entry	Operation command	Action entry	Operation command
0 (disable)	×	×	○	○
1 (enable)	○	○	○	○

Note The specified group operation is not saved in the non-volatile memory, and therefore the initial value will be restored once the power is cut off.

■ Group (0Ch)

Description	Specifies the group to be used in group send.		
Action entry	WRITE/READ		
Type	Special command	Mode	00h
Data area	−1: Individual send (Do not perform group send) 0 to 31: Specify a group.	Initial value	−1

Note The specified group operation is not saved in the non-volatile memory, and therefore the initial value will be restored once the power is cut off.

■ Communication timeout action (0Dh)

Description	Sets how to stop the motor when a communication timeout occurs.		
Action entry	WRITE: Set this before the operation is started. The setting will become effective immediately after valid data has been received. READ		
Type	Parameter command	Mode	00h
Data area	0: Immediate stop 1: Decelerate stop	Initial value	1

■ Dwell time (0Eh)

Description	Set the dwell time to be used in linked-motion operation 2.		
Action entry	WRITE: Set this before the operation is started. The setting will become effective immediately after valid data has been received. READ		
Type	Operation data command	Mode	01h to 3Fh (1 to 63)
Data area	0 to 50,000 (1=0.001 s)	Initial value	0

■ Sequential positioning (0Fh)

Description	Sets enable or disable sequential positioning operation.		
Action entry	WRITE: Set this before the operation is started. The setting will become effective immediately after valid data has been received. READ		
Type	Operation data command	Mode	01h to 3Fh (1 to 63)
Data area	0: Disable 1: Enable	Initial value	0

■ Positioning mode (10h)

Description	Selects how to specify the position (travel amount) in positioning operation (absolute mode or incremental mode).		
Action entry	WRITE: Set this before the operation is started. The setting will become effective immediately after valid data has been received. READ		
Type	Operation data command	Mode	01h to 3Fh (1 to 63)
Data area	0: INC (incremental) 1: ABS (absolute)	Initial value	0

■ Operating mode (11h)

Description	Sets perform positioning operation as single-motion or linked-motion operation.		
Action entry	WRITE: Set this before the operation is started. The setting will become effective immediately after valid data has been received. READ		
Type	Operation data command	Mode	01h to 3Fh (1 to 63)
Data area	0: Single 1: Link 2: Link2	Initial value	0

■ Home-seeking mode (12h)

Description	Set the mode for return-to-home operation.		
Action entry	WRITE: Set this before the operation is started. The setting will become effective immediately after valid data has been received. READ		
Type	Parameter command	Mode	00h
Data area	0: 2 sensors 1: 3 sensors	Initial value	1

■ STOP action (13h)

Description	Sets how the motor should stop when a STOP input is turned ON.		
Action entry	WRITE: The setting will become effective immediately after valid data has been received. READ		
Type	Parameter command	Mode	00h
Data area	0: Immediate stop 1: Decelerate stop 2: Immediate stop & Current OFF 3: Decelerate stop & Current OFF	Initial value	1

■ Overtravel action (14h)

Description	Sets the motor action to take place upon the occurrence of overtravel.		
Action entry	WRITE: Set this before the operation is started. The setting will become effective immediately after valid data has been received. READ		
Type	Parameter command	Mode	00h
Data area	0: Immediate stop 1: Decelerate stop	Initial value	0

■ LS contact configuration (1Ah)

Description	Sets the ±LS input logics.		
Action entry	WRITE: The setting will become effective immediately after valid data has been received. READ		
Type	Parameter command	Mode	00h
Data area	0: Make (N.O.) 1: Brake (N.C.)	Initial value	0

■ HOMES contact configuration (1Bh)

Description	Sets the HOMES input logic.		
Action entry	WRITE: The setting will become effective immediately after valid data has been received. READ		
Type	Parameter command	Mode	00h
Data area	0: Make (N.O.) 1: Brake (N.C.)	Initial value	0

■ SLIT contact configuration (1Ch)

Description	Sets the SLIT input logic.		
Action entry	WRITE: The setting will become effective immediately after valid data has been received. READ		
Type	Parameter command	Mode	00h
Data area	0: Make (N.O.) 1: Brake (N.C.)	Initial value	0

■ STOP contact configuration (1Dh)

Description	Sets the STOP input logic.		
Action entry	WRITE: The setting will become effective immediately after valid data has been received. READ		
Type	Parameter command	Mode	00h
Data area	0: Make (N.O.) 1: Brake (N.C.)	Initial value	1

■ AWO contact configuration (1Eh)

Description	Sets the AWO input logic.		
Action entry	WRITE: The setting will become effective immediately after valid data has been received. READ		
Type	Parameter command	Mode	00h
Data area	0: Make (N.O.) 1: Brake (N.C.)	Initial value	0

■ C-ON logic configuration (1Fh)

Description	Sets the "Excitation control" command logic for RS-485 communication.		
Action entry	WRITE: The setting will become effective immediately after valid data has been received. READ		
Type	Parameter command	Mode	00h
Data area	0: 0=Not excited, 1=Excited 1: 0=Excited, 1=Not excited	Initial value	0

■ Clear counter (20h)

Description	Clears the command position and encoder counter to 0. This command also clears the internal deviation of the driver. You can recover from a deviation error by executing the clear counter command.		
Action entry	WRITE		
Type	Operation command	Mode	00h
Data area	The data area values will be ignored.		

Note Perform a counter clear while the motor is stopped.

■ Reset alarms (21h)

Description	Resets the alarms that are present.		
Action entry	WRITE		
Type	Operation command	Mode	00h
Data area	The data area values will be ignored.		

■ Excitation control (22h)

Description	Switches the motor excitation condition between excitation and non-excitation.		
Action entry	WRITE		
Type	Operation command	Mode	00h
Data area	The excitation condition of the motor at the power ON varies depending on the "C-ON logic configuration" parameter. See table next.		

"C-ON logic configuration" parameter	"Excitation control" command	
	0	1
0	Not excitation	Excitation
1	Excitation	Not excitation

■ Preset position (23h)

Description	Presets the command position as the value of the "Preset position" parameter.		
Action entry	WRITE		
Type	Operation command	Mode	00h
Data area	The data area values will be ignored.		

Note Perform a preset position while the motor is stopped.

■ Preset encoder counter (24h)

Description	Presets the encoder counter value as the value of the "Encoder counter preset value" parameter.		
Action entry	WRITE		
Type	Operation command	Mode	00h
Data area	The data area values will be ignored.		

Note
- Perform a preset encoder counter while the motor is stopped.
- This command is used when an encoder is connected.

■ Clear alarm records (25h)

Description	Clears alarm records.		
Action entry	WRITE		
Type	Maintenance command	Mode	00h
Data area	1: Execute		

■ Clear warning records (26h)

Description	Clears warning records.		
Action entry	WRITE		
Type	Maintenance command	Mode	00h
Data area	1: Execute		

■ Clear communication error records (27h)

Description	Clears the communication error records.		
Action entry	WRITE		
Type	Maintenance command	Mode	00h
Data area	1: Execute		

■ Remote output (32h)

Description	Sets ON/OFF of the R-OUT1 to R-OUT4 output. Data 1 in the data area is assigned as shown in the table next.		
Action entry	WRITE/READ		
Type	Operation command	Mode	00h
Data area	0: OFF (photocoupler un-energized) 1: ON (photocoupler energized)	Initial value	0

Bit7	Bit6	Bit5	Bit4	Bit3	Bit2	Bit1	Bit0
0	0	0	0	R-OUT4	R-OUT3	R-OUT2	R-OUT1

■ Remaining dwell time (35h)

Description	Monitors how much of the dwell time used in the linked-motion operation 2 remains.		
Action entry	READ		
Type	Monitor command	Mode	00h
Data area	0 to 50,000 (1=0.001 s)		

■ Display selection data number (36h)

Description	Monitors the operation data number currently selected.		
Action entry	READ		
Type	Monitor command	Mode	00h
Data area	00h to 3Fh (0 to 63)		

■ Display operation data number (37h)

Description	Monitors the operation data number used in the positioning operation currently in progress. This command can be used in a linked-motion operation and sequential positioning operation. While the motor is stopped, the last used operation data number is indicated.		
Action entry	READ		
Type	Monitor command	Mode	00h
Data area	00h to 3Fh (0 to 63) While the motor is stopped, the last executed data number will be read.		

■ I/O status (39h)

Description	Monitors the each I/O signal (CN2) of the driver. Data 1 to 4 in the data area is assigned as shown in the table next.		
Action entry	READ		
Type	Monitor command	Mode	00h
Data area	0: OFF (photocoupler un-energized) 1: ON (photocoupler energized)		

Assignment table for data 1 to 4

	Bit7	Bit6	Bit5	Bit4	Bit3	Bit2	Bit1	Bit0
Data 1	0	0	M5	M4	M3	M2	M1	M0
Data 2	0	RVS	FWD	HOME	STOP	AWO	ALM-RST	START
Data 3	0	0	0	0	SLIT	HOMES	–LS	+LS
Data 4	0	0	OUT4	OUT3	OUT2	OUT1	ALM	MOVE

■ Driver status (3Ch)

Description	Monitors the driver status. Data 1 to 4 in the data area is assigned as shown in the table next.		
Action entry	READ		
Type	Monitor command	Mode	00h
Data area	See table next.		

● **Assignment table for data 1 to 4**

	Bit7	Bit6	Bit5	Bit4	Bit3	Bit2	Bit1	Bit0
Data 1	ENABLE	ALM	AREA	S-BSY	READY	HOME-P	0	MOVE
Data 2	START_R	O.H.	HOMES	SLIT	–LS	+LS	STEPOUT	WNG
Data 3	ZSG	TIM	M5_R	M4_R	M3_R	M2_R	M1_R	M0_R
Data 4	ALMCD							

● **Details of data being read**

Signal	Data	Description
MOVE	1: Motor operating	The motor is operating.
HOME-P	1: Return-to-home complete	Return-to-home has completed. It can be used as a home-seeking completion signal.
READY	1: Ready	The motor can be operated.
S-BSY	1: Internal processing in progress	Internal processing is in progress via RS-485 communication.
AREA	1: Inside area	The motor output shaft is inside the specified range.
ALM	1: Alarm present	An alarm is present.
ENABLE	1: Motor excited	The motor excitation command is effective.
WNG	1: Warning present	A warning is present.
STEPOUT	1: Deviation error present	The step deviation is abnormal.
+LS	1: +Limit sensor signal being detected	The I/O +LS signal is being input.
–LS	1: –Limit sensor signal being detected	The I/O –LS signal is being input.
SLIT	1: Slit sensor signal being detected	The I/O SLIT signal is being input.
HOMES	1: Mechanical home sensor signal being detected	The I/O HOMES signal is being input.
O.H.	1: Overheat warning present	An overheat warning is present.
START_R	1: START=ON	Indicate the status of START. *
M0_R to M5_R	Operation data number (00h to 3Fh)	Selected data number *
TIM	1:TIM being detected	The motor is excited. "1" will be read if the motor is at its excitation home.
ZSG	1: ZSG being detected	The encoder input corresponds to Z-phase.
ALMCD	Alarm code	The alarm code corresponding to the alarm currently present.

* START and M0 to M5 can be turned ON/OFF via I/O or RS-485 communication. If these signals are controlled via I/O, the I/O-controlled ON/OFF status is returned. If the signals are controlled via RS-485 communication, the RS-485-communication-controlled ON/OFF status is returned. I/O control is selected as the default prior to shipment.

■ Communication error record (3Dh)

Description	You can use this command to check the communication errors that have occurred in the past.
Action entry	READ
Type	Monitor command
Mode	0: Specify the communication error pertaining to the last received frame. 1 to 10: Specify communication error records 1 to 10. Specify 1 for the latest record.
Data area	The communication error code is stored under data 1 in the data area.

■ Alarm record (3Eh)

Description	You can use this command to check the alarms that are present and alarms that have occurred in the past.
Action entry	READ
Type	Monitor command
Mode	0: Specify the alarm currently present. 1 to 10: Specify alarm records 1 to 10. Specify 1 for the latest record.
Data area	The alarm code is stored under data 1 in the data area.

■ Warning record (3Fh)

Description	You can use this command to check the warnings that are present and warnings that have occurred in the past.
Action entry	READ
Type	Monitor command
Mode	0: Specify the warning currently present. 1 to 10: Specify warning records 1 to 10. Specify 1 for the latest record.
Data area	The warning code is stored under data 1 in the data area.

■ Operating current (40h)

Description	Sets the motor operating current based on the rated current being 100%.		
Action entry	WRITE: The setting will become effective immediately after valid data has been received. READ		
Type	Parameter command	Mode	00h
Data area	5 to 100 (%)	Initial value	100

Note

Decrease the operating current and standstill current when there is excess margin in the motor torque and you wish to reduce vibration during operation or suppress heat generation from the motor. However, be careful of an excessive decrease in current, since the motor torque and holding brake force will drop in rough proportion to the operating current.

■ Standstill current (41h)

Description	Sets the motor standstill current as a percentage of the rated current, based on the rated current being 100%.		
Action entry	WRITE: The setting will become effective immediately after valid data has been received. READ		
Type	Parameter command	Mode	00h
Data area	5 to 50 (%)	Initial value	50

Note

- Decrease the operating current and standstill current when there is excess margin in the motor torque and you wish to reduce vibration during operation or suppress heat generation from the motor. However, be careful of an excessive decrease in current, since the motor torque and holding brake force will drop in rough proportion to the operating current.
- The standstill current is the rated current (100%) multiplied by the standstill current ratio.

■ Motor rotation direction (43h)

Description	Sets the rotation direction of motor output shaft.		
Action entry	WRITE: This setting will become effective after the "Batch non-volatile memory write" command is executed and the power is cycled. READ		
Type	Parameter command	Mode	00h
Data area	0: +direction=CCW 1: +direction=CW	Initial value	1

■ Motor step angle (44h)

Description	Sets the motor step angle.		
Action entry	WRITE: This setting will become effective after the "Batch non-volatile memory write" command is executed and the power is cycled. READ		
Type	Parameter command	Mode	00h
Data area	See table next.	Initial value	0

● **Setting value of the "Motor step angle (44h)" command**

If the base step angle of the motor is 0.72°

Setting	Step angle	Number of divisions
0	0.72°	1
1	0.36°	2
2	0.288°	2.5
3	0.18°	4
4	0.144°	5
5	0.09°	8
6	0.072°	10
7	0.036°	20
8	0.0288°	25
9	0.018°	40
10	0.0144°	50
11	0.009°	80
12	0.0072°	100
13	0.00576°	125
14	0.0036°	200
15	0.00288°	250

If the base step angle of the motor is 0.36°

Setting	Step angle	Number of divisions
0	0.36°	1
1	0.18°	2
2	0.144°	2.5
3	0.09°	4
4	0.072°	5
5	0.045°	8
6	0.036°	10
7	0.018°	20
8	0.0144°	25
9	0.009°	40
10	0.0072°	50
11	0.0045°	80
12	0.0036°	100
13	0.0028°	125
14	0.0018°	200
15	0.00144°	250

Note

- Step angles are theoretical values.
- With the geared type, the value of "step angle/gear ratio" becomes the actual step angle.
- The base step angle is 0.36° for high-resolution type motors.

■ Batch non-volatile memory write (48h)

Description	Writes the operation data and parameters saved in the RAM, to the non-volatile memory.		
Action entry	WRITE		
Type	Maintenance command	Mode	00h
Data area	1: Execute		

Note

- Perform the batch non-volatile memory write while the motor is stopped.
- The non-volatile memory can be rewritten approximately 100,000 times.

■ Batch all data initialization (49h)

Description	Resets the operation data and parameters saved in the RAM and non-volatile memory, to their defaults. Note that the following parameters are not initialized; Communication axis number, communication protocol, communication parity, communication stop bit and transmission waiting time		
Action entry	WRITE		
Type	Maintenance command	Mode	00h
Data area	1: Execute		

Note
- Perform the batch non-volatile memory initialization while the motor is stopped.
- The non-volatile memory can be rewritten approximately 100,000 times.

■ Batch non-volatile memory read (4Ah)

Description	Reads the operation data and parameters saved in the RAM, to the non-volatile memory. All operation data and parameters currently saved in the RAM will be overwritten by the corresponding data and parameters read from the non-volatile memory.		
Action entry	WRITE		
Type	Maintenance command	Mode	00h
Data area	1: Execute		

Note Perform the batch non-volatile memory read while the motor is stopped.

■ Encoder electronic gear A (4Bh)

Description	Sets the encoder electronic gear A. This command is used in the misstep detection function. It does not affect the encoder counter value. See p.90 for details.		
Action entry	WRITE: This setting will become effective after the "Batch non-volatile memory write" command is executed and the power is cycled. READ		
Type	Parameter command	Mode	00h
Data area	1 to 250,000	Initial value	500

Note This command is used when an encoder is connected.

■ Encoder electronic gear B (4Ch)

Description	Sets the encoder electronic gear B. This command is used in the misstep detection function. It does not affect the encoder counter value. See p.90 for details.		
Action entry	WRITE: This setting will become effective after the "Batch non-volatile memory write" command is executed and the power is cycled. READ		
Type	Parameter command	Mode	00h
Data area	1 to 250,000	Initial value	500

Note This command is used when an encoder is connected.

■ Starting speed (80h)

Description	Sets the starting speed in positioning operation and continuous operation.		
Action entry	WRITE: Set this before the operation is started. The setting will become effective immediately after valid data has been received. READ		
Type	Parameter command	Mode	00h
Data area	1 to 500,000 (Hz)	Initial value	100

■ Acceleration rate (82h)

Description	Sets the acceleration rate in positioning operation and continuous operation. The acceleration rate can be set as follows using the "Acceleration (deceleration) rate type" command. Separate: The acceleration rate set under the applicable operation data number will be followed. Common: The setting of the "Common acceleration rate" command will be followed.		
Action entry	WRITE: Set this before the operation is started. The setting will become effective immediately after valid data has been received. READ		
Type	Operation data command	Mode	01h to 3Fh (1 to 63)
Data area	0.001 to 1,000.000 (ms/kHz)	Initial value	30.000

■ Deceleration rate (83h)

Description	Sets the deceleration rate in positioning operation and continuous operation. The deceleration rate can be set as follows using the "Acceleration (deceleration) rate type" command. Separate: The deceleration rate set under the applicable operation data number will be followed. Common: The setting of the "Common deceleration rate" command will be followed.		
Action entry	WRITE: Set this before the operation is started. The setting will become effective immediately after valid data has been received. READ		
Type	Operation data command	Mode	01h to 3Fh (1 to 63)
Data area	0.001 to 1,000.000 (ms/kHz)	Initial value	30.000

■ Operating speed (88h)

Description	Sets the operating speed in positioning operation and continuous operation.		
Action entry	WRITE: In positioning operation, set this before the operation is started. The setting will become effective immediately after valid data has been received. In continuous operation, the setting will become effective immediately after valid data has been received. The speed will change while continuous operation is being performed. READ		
Type	Operation data command	Mode	01h to 3Fh (1 to 63)
Data area	1 to 500,000 (Hz)	Initial value	1,000

■ Command speed (8Bh)

Description	Monitors the current command speed.		
Action entry	READ		
Type	Monitor command	Mode	00h
Data area	−500,000 to 500,000 (Hz) A positive value indicates the forward direction, while a negative value indicates a reverse direction.		

■ Acceleration (deceleration) rate type (8Dh)

Description	Sets whether to use the common acceleration/deceleration rate or the acceleration/deceleration rate specified for the operation data.		
Action entry	WRITE: Set this before the operation is started. The setting will become effective immediately after valid data has been received. READ		
Type	Parameter command	Mode	00h
Data area	0: Common 1: Separate	Initial value	0

■ Common acceleration rate (8Eh)

Description	Sets the common acceleration rate in positioning operation and continuous operation. The acceleration rate can be set as follows using the "Acceleration (deceleration) rate type" command. Separate: The acceleration rate set under the applicable operation data number will be followed. Common: The setting of the "Common acceleration rate" command will be followed.		
Action entry	WRITE: Set this before the operation is started. The setting will become effective immediately after valid data has been received. READ		
Type	Parameter command	Mode	00h
Data area	0.001 to 1,000.000 (ms/kHz)	Initial value	30.000

■ Common deceleration rate (8Fh)

Description	Sets the common deceleration rate in positioning operation and continuous operation. The deceleration rate can be set as follows using the "Acceleration (deceleration) rate type" command. Separate: The deceleration rate set under the applicable operation data number will be followed. Common: The setting of the "Common deceleration rate" command will be followed.		
Action entry	WRITE: Set this before the operation is started. The setting will become effective immediately after valid data has been received. READ		
Type	Parameter command	Mode	00h
Data area	0.001 to 1,000.000 (ms/kHz)	Initial value	30.000

■ JOG starting speed (90h)

Description	Sets the starting speed for JOG operation.		
Action entry	WRITE: Set this before the operation is started. The setting will become effective immediately after valid data has been received. READ		
Type	Parameter command	Mode	00h
Data area	1 to 500,000 Hz	Initial value	100

■ JOG acceleration (deceleration) rate (91h)

Description	Sets the acceleration/deceleration rate for JOG operation.		
Action entry	WRITE: Set this before the operation is started. The setting will become effective immediately after valid data has been received. READ		
Type	Parameter command	Mode	00h
Data area	0.001 to 1,000.000 (ms/kHz)	Initial value	30.000

■ JOG operating speed (92h)

Description	Sets the operating speed for JOG operation.		
Action entry	WRITE: Set this before the operation is started. The setting will become effective immediately after valid data has been received. READ		
Type	Parameter command	Mode	00h
Data area	1 to 500,000 Hz	Initial value	1,000

■ Starting speed of home-seeking (93h)

Description	Sets the starting speed for return- to-home operation.		
Action entry	WRITE: Set this before the operation is started. The setting will become effective immediately after valid data has been received. READ		
Type	Parameter command	Mode	00h
Data area	1 to 500,000 Hz	Initial value	100

■ Acceleration (deceleration) rate of home-seeking (94h)

Description	Sets the acceleration/deceleration rate for return-to-home operation.		
Action entry	WRITE: Set this before the operation is started. The setting will become effective immediately after valid data has been received. READ		
Type	Parameter command	Mode	00h
Data area	0.001 to 1,000.000 (ms/kHz)	Initial value	30.000

■ Operating speed of home-seeking (95h)

Description	Sets the operating speed for return- to-home operation.		
Action entry	WRITE: Set this before the operation is started. The setting will become effective immediately after valid data has been received. READ		
Type	Parameter command	Mode	00h
Data area	1 to 500,000 Hz	Initial value	1,000

■ HOME/FWD/RVS input mode (98h)

Description	Sets whether to input the HOME, FWD and RVS input signals via I/O or RS-485 communication.		
Action entry	WRITE: The setting will become effective immediately after valid data has been received. READ		
Type	Parameter command	Mode	00h
Data area	0: RS-485 communication 1: I/O	Initial value	1

■ START input mode (99h)

Description	Sets whether to input the START input signal via I/O or RS-485 communication.		
Action entry	WRITE: The setting will become effective immediately after valid data has been received. READ		
Type	Parameter command	Mode	00h
Data area	0: RS-485 communication 1: I/O	Initial value	1

■ I/O STOP input (9Ah)

Description	Sets enable or disable STOP input of I/O.		
Action entry	WRITE: The setting will become effective immediately after valid data has been received. READ		
Type	Parameter command	Mode	00h
Data area	0: Disable 1: Enable	Initial value	1

■ Motor excitation mode (9Bh)

Description	Sets whether to control the motor excitation via I/O or RS-485 communication.		
Action entry	WRITE: The setting will become effective immediately after valid data has been received. READ		
Type	Parameter command	Mode	00h
Data area	0: RS-485 communication 1: I/O	Initial value	1

■ Data No. input mode (9Ch)

Description	Sets whether to input the M0 to M5 input signals via I/O or RS-485 communication.		
Action entry	WRITE: The setting will become effective immediately after valid data has been received. READ		
Type	Parameter command	Mode	00h
Data area	0: RS-485 communication 1: I/O	Initial value	1

■ Position (A0h)

Description	Sets the position (distance) for positioning operation.		
Action entry	WRITE: Set this before the operation is started. The setting will become effective immediately after valid data has been received. READ		
Type	Operation data command	Mode	01h to 3Fh (1 to 63)
Data area	–8,388,608 to +8,388,607 (step)	Initial value	0

■ Command position (A1h)

Description	Monitors the command position of the driver.		
Action entry	READ		
Type	Monitor command	Mode	00h
Data area	–2,147,483,648 to +2,147,483,647 (step)		

■ Encoder counter (A2h)

Description	Monitors the encoder counter value.		
Action entry	READ		
Type	Monitor command	Mode	00h
Data area	–2,147,483,648 to +2,147,483,647 (step)		

Note This command is used when an encoder is connected.

■ Encoder counter preset value (A3h)

Description	Sets the encoder counter preset value.		
Action entry	WRITE: The setting will become effective immediately after valid data has been received. READ		
Type	Parameter command	Mode	00h
Data area	–8,388,608 to +8,388,607 (step)	Initial value	0

Note This command is used when an encoder is connected.

■ Preset position (A4h)

Description	Sets the preset position.		
Action entry	WRITE: The setting will become effective immediately after valid data has been received. READ		
Type	Parameter command	Mode	00h
Data area	–8,388,608 to +8,388,607 (step)	Initial value	0

■ Area 1 (A5h)

Description	Sets the range for AREA output. The AREA output will be ON when the motor is inside the area set by the area 1 and area 2.		
Action entry	WRITE: The setting will become effective immediately after valid data has been received. READ		
Type	Parameter command	Mode	00h
Data area	–8,388,608 to +8,388,607 (step)	Initial value	0

■ Area 2 (A6h)

Description	Sets the range for AREA output. The AREA output will be ON when the motor is inside the area set by the area 1 and area 2.		
Action entry	WRITE: The setting will become effective immediately after valid data has been received. READ		
Type	Parameter command	Mode	00h
Data area	–8,388,608 to +8,388,607 (step)	Initial value	0

■ Position offset of home-seeking (A8h)

Description	Sets the amount of offset from mechanical home.		
Action entry	WRITE: Set this before the operation is started. The setting will become effective immediately after valid data has been received. READ		
Type	Parameter command	Mode	00h
Data area	–8,388,608 to +8,388,607 (step)	Initial value	0

■ Starting direction of home-seeking (A9h)

Description	Sets the starting direction for home detection.		
Action entry	WRITE: Set this before the operation is started. The setting will become effective immediately after valid data has been received. READ		
Type	Parameter command	Mode	00h
Data area	0: Negative direction 1: Positive direction	Initial value	1

■ SLIT detection with home-seeking (AAh)

Description	Sets whether or not to concurrently use the SLIT input for return-to-home operation.		
Action entry	WRITE: Set this before the operation is started. The setting will become effective immediately after valid data has been received. READ		
Type	Parameter command	Mode	00h
Data area	0: Disable 1: Enable	Initial value	0

■ TIM signal detection with home-seeking (ABh)

Description	Sets whether or not to concurrently use the TIM (ZSG) output for return-to-home operation.		
Action entry	WRITE: Set this before the operation is started. The setting will become effective immediately after valid data has been received. READ		
Type	Parameter command	Mode	00h
Data area	0: Disable 1: Enable (TIM) 2: Enable (ZSG) *	Initial value	0

* This signal is used when an encoder is connected.

■ Backward steps in 2-sensor mode home-seeking (ACh)

Description	Sets the travel amount after the motor pulls off of the LS sensor in 2-sensor return-to-home operation.		
Action entry	WRITE: Set this before the operation is started. The setting will become effective immediately after valid data has been received. READ		
Type	Parameter command	Mode	00h
Data area	0 to 32,767 (step)	Initial value	200

■ Overvoltage warning (B1h)

Description	Sets the voltage at which an overvoltage warning generates.		
Action entry	WRITE: The setting will become effective immediately after valid data has been received. READ		
Type	Parameter command	Mode	00h
Data area	250 to 350 (1=0.1 V)	Initial value	310

■ Overheat warning (B2h)

Description	Sets the temperature at which an overheat warning generates.		
Action entry	WRITE: The setting will become effective immediately after valid data has been received. READ		
Type	Parameter command	Mode	00h
Data area	40 to 85 (°C)	Initial value	85

■ Software overtravel (B7h)

Description	Sets whether to enable or disable software overtravel detection using soft limits.		
Action entry	WRITE: Set this before the operation is started. The setting will become effective immediately after valid data has been received. READ		
Type	Parameter command	Mode	00h
Data area	0: Disable 1: Enable	Initial value	1

■ Positive software limit (B8h)

Description	Sets the value of the soft limit in + direction.		
Action entry	WRITE: Set this before the operation is started. The setting will become effective immediately after valid data has been received. READ		
Type	Parameter command	Mode	00h
Data area	–8,388,608 to +8,388,607 (step)	Initial value	8,388,607

■ Negative software limit (B9h)

Description	Sets the value of the soft limit in – direction.		
Action entry	WRITE: Set this before the operation is started. The setting will become effective immediately after valid data has been received. READ		
Type	Parameter command	Mode	00h
Data area	–8,388,608 to +8,388,607 (step)	Initial value	–8,388,608

■ Hardware overtravel detection (BAh)

Description	Sets whether to enable or disable hardware overtravel detection using LS inputs.		
Action entry	WRITE: Set this before the operation is started. The setting will become effective immediately after valid data has been received. READ		
Type	Parameter command	Mode	00h
Data area	0: Disable 1: Enable	Initial value	1

■ Stepout detection band (BBh)

Description	Sets the judgment condition for misstep detection using the deviation (angle) between the command position and encoder counter value. See p.90 for misstep detection.		
Action entry	WRITE: The setting will become effective immediately after valid data has been received. READ		
Type	Parameter command	Mode	00h
Data area	1 to 3,600 (1=0.1 deg)	Initial value	72

Note

- This command is used when an encoder is connected.
- To use misstep detection, set the "Stepout detection" parameter to "enable."

■ Stepout detection action (BCh)

Description	Sets the operation to be performed when the deviation between the command position and encoder counter value reaches the stepout detection band. See p.90 for misstep detection.		
Action entry	WRITE: Set this before the operation is started. The setting will become effective immediately after valid data has been received. READ		
Type	Parameter command	Mode	00h
Data area	0: No action (alarm/warning not present) 1: Warning 2: Alarm	Initial value	0

Note
- This command is used when an encoder is connected.
- To use misstep detection, set the "Stepout detection" parameter to "enable."

■ Stepout detection (BDh)

Description	Sets whether to enable or disable the misstep detection function. See p.90 for misstep detection.		
Action entry	WRITE: This setting will become effective after the "Batch non-volatile memory write" command is executed and the power is cycled. READ		
Type	Parameter command	Mode	00h
Data area	0: Disable 1: Enable	Initial value	0

Note This command is used when an encoder is connected.

■ Display mode of the data setter speed (CAh)

Description	Sets the display method of monitored speed in the **OPX-2A**.		
Action entry	WRITE: The setting will become effective immediately after valid data has been received. READ		
Type	Parameter command	Mode	00h
Data area	0: Signed 1: Absolute	Initial value	0

■ The data setter editing mode (CBh)

Description	Sets whether to enable editing by the **OPX-2A** when the power is turned on.		
Action entry	WRITE/READ		
Type	Parameter command	Mode	00h
Data area	0: Disable 1: Enable	Initial value	1

3-12 Simultaneous send

One frame can be sent to all devices connected to the host control device. The devices do not respond in the case of simultaneous send.
The operation specifications and commands that can be sent via simultaneous send are limited. The invalid operation specifications and commands are ignored.

■ Operation specifications that can be executed via simultaneous send

Operation specifications	Description
STOP	Stop command
RVS	Continuous operation in reverse direction
FWD	Continuous operation in forward direction
START	Positioning operation

■ Commands that can be executed via simultaneous send

Command No.	Command execution		Description
	READ	WRITE	
00h	Impossible	Possible	Data number selection
20h			Clear counter
21h			Reset alarms
22h			Excitation control
23h			Preset position
24h			Preset encoder counter
32h			Remote output

3-13 Group send

A frame is sent simultaneously to all of the devices comprising one group.

■ Group composition

Each group consists of one main axis and one or more subordinate axes, and only the main axis returns a response.

- **Group axis number**

To perform a group send, set a group axis number to the subordinate axes to be included in the group.
The subordinate axes to which the group axis number has been set can receive a frame sent to the main axis.
Accordingly, you can send a frame to all of the main and subordinate axes in the group by sending it to the main axis only.

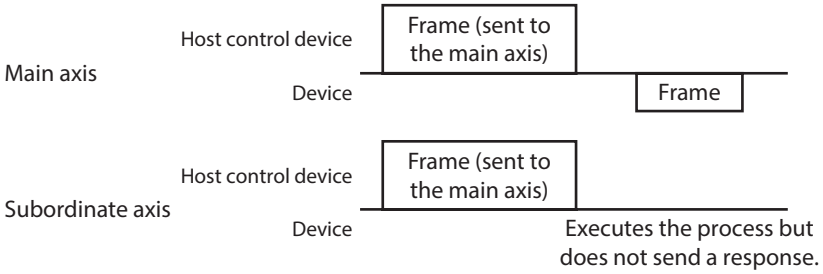

- **Main axis**

No special setting is required on the main axis to perform a group send. The axis number of the main axis becomes the group axis number. When a command is sent to the main axis from the host control device, the main axis executes the requested process and then returns a response.

- **Subordinate axis**

  Use a "Group" command to set a group axis number to each subordinate axis.
  The main axis is not always required, and a group may consist only of subordinate axes if no response is required. In this case, set an available axis number for the group. When a frame is sent from the host control device to this axis number, the frame is sent to all members of the group simultaneously.

■ Operation specifications that can be executed via group send

Operation specifications	Description
STOP	Stop command
HOME	Return-to-home operation
RVS	Continuous operation in reverse direction
FWD	Continuous operation in forward direction
START	Positioning operation

■ Commands that can be executed via group send

Command No.	Command execution		Description
	READ	WRITE	
00h	Impossible	Possible	Data number selection
20h			Clear counter
21h			Reset alarms
22h			Excitation control
23h			Preset position
24h			Preset encoder counter
32h			Remote output

■ Example of group send

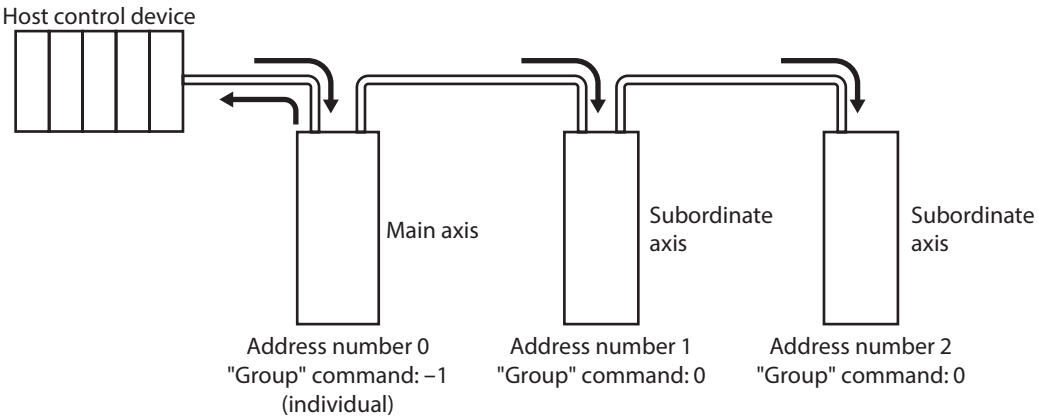

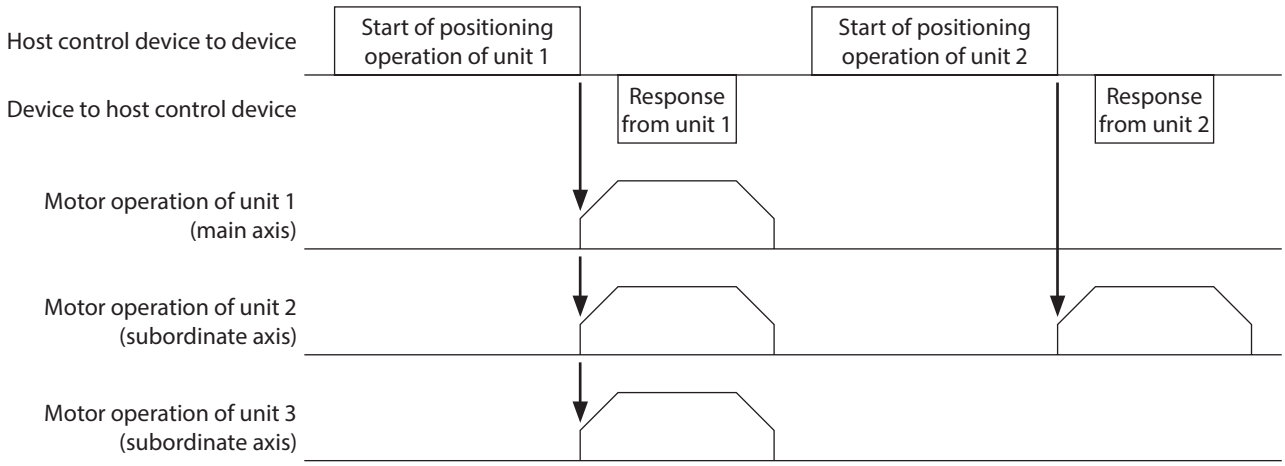

This operation assumes that the "Group operation" parameter is set to "enable" (initial value). If this parameter is set to "disable", the subordinate axes will receive frames only via group send and thus the operation specifications and commands sent individually to a given unit will not be executed.

3-14 Detection of communication errors

This function detects abnormalities that may occur during RS-485 communication. The abnormalities that can be detected include communication errors, alarms and warnings.

■ Communication errors

If the frame is discarded due to a reception failure (NACK) or RS-485 communication error (84h), a communication error record will be saved in the RAM. You can check the communication errors using the "Communication error record" command using the **MEXE02** or via RS-485 communication.

Note The communication error record will be cleared once the driver power is turned off.

Type of communication error	Error code	Cause
RS-485 communication error	84h	One of the following errors was detected. A single error will generate a warning. If the error generates three times consecutively, an alarm will generate. · Framing error · Elapse of receive monitor period · Mismatched BCC · Invalid header
Command not yet defined	88h	The command could not be executed for the following reasons: · Insufficient operation specification (A system-reserved bit was set to 1.) · Unknown mode (An undefined mode was specified.) · Unknown command (An undefined command was specified.) · WRITE failure (An invalid write command was specified.) · READ failure (An invalid read command was specified.)
User interface communication in progress	89h	The command could not be executed because the user interface communication was in progress. · Downloading or initialization is currently in progress via the **MEXE02**. · The **OPX-2A** is currently connected in a mode other than the monitor mode.
Internal processing in progress	8Ah	The command could not be executed because the driver was processing the non-volatile memory. · Internal processing was in progress. (S-BSY is ON.) · An EEPROM error alarm was present.
Outside setting range	8Ch	The command could not be executed because the data was outside the specified range.

■ Alarms and warnings

When an alarm generates, the ALM output will turn OFF and the motor will stop. At the same time, the ALARM LED will start blinking.
When a warning generates, the WNG output will turn ON. The motor will continue to operate. Once the cause of the warning is removed, the WNG output will turn OFF automatically.

Note You can also clear the warning records by turning off the driver power.

● RS-485 communication error (84h)

The table next shows the relationship between alarms and warnings when an RS-485 communication error occurs.

Type of error	Description
Warning	If a RS-485 communication error (84h) generates only once, a warning will generate. The warning will be reset automatically following a successful data reception.
Alarm	An alarm generates when a RS-485 communication error (84h) has been detected consecutively by the number of times set in the "Communication error alarm" parameter. While the alarm is present, RS-485 communication is cut off and the motor becomes unexcited.

The causes of RS-485 communication error (84h) and remedial action taken by the device are shown below.

Error	Cause	Remedial action
Framing error	The stop bit is "0."	The received frame will be destroyed and the device wait for the next frame to be received.
Elapse of receive monitor period	Receive monitor period elapsed before the frame reception was completed.	
Mismatched BCC	The BCC did not match the calculated value.	
Invalid header	An address number other than 0 was specified for simultaneous send.	

Note Even when a RS-485 communication error (84h) occurs, the device does not send a reply. Accordingly, the host control device should perform an appropriate action such as resending the command.
Before resending the command from the host control device, wait for at least T2 (response time)+T3 (receive monitoring). If the command is resent before the receive monitoring period elapses, the next frame may not be received properly.

● RS-485 communication timeout (85h)

If communication is not established with the host control device after an elapse of the time set by the "Receive period" parameter, a RS-485 communication timeout alarm will generate.
The motor stopping method can be set using the "Communication timeout action" parameter.

3-15 Timing charts

■ Communication start

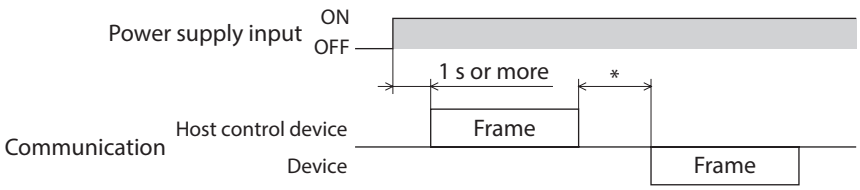

* T2 (response interval)

■ Operation start

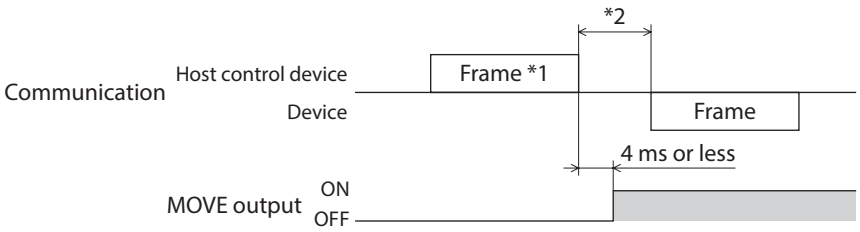

*1 Frame containing an operation specification (HOME, RVS, FWD or START)
*2 T2 (response interval)

■ Operation stop, speed change

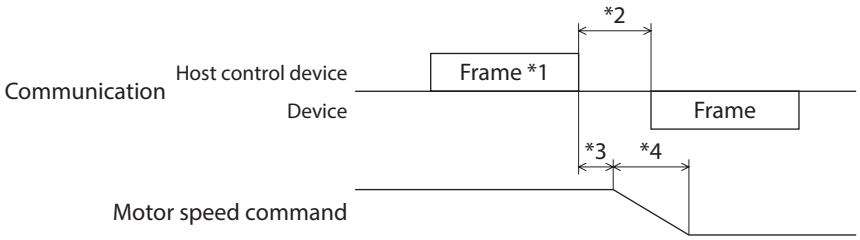

*1 Frame containing the operation specification STOP or "Data number selection" command
*2 T2 (response interval)
*3 The specific time varies depending on the command speed.
*4 The deceleration method to be applied at the time of stopping varies according to the value set by the "STOP action" command.

■ Excitation control

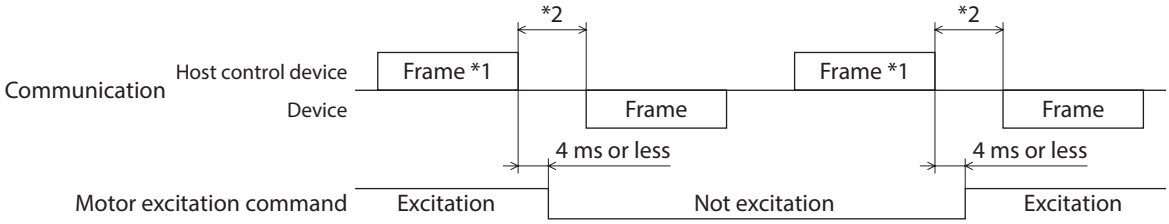

*1 Frame containing the "Excitation control" command
*2 T2 (response interval)

■ Remote output

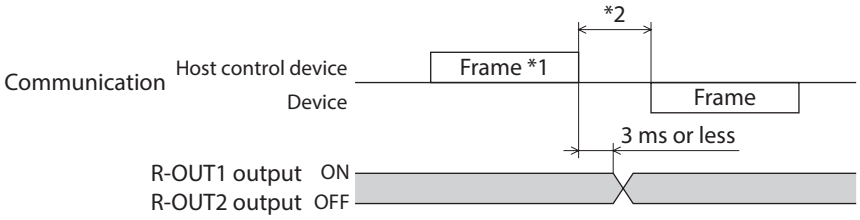

*1 Frame containing the "Remote output" command
*2 T2 (response interval)

- Unauthorized reproduction or copying of all or part of this Manual is prohibited.
  If a new copy is required to replace an original manual that has been damaged or lost, please contact your nearest Oriental Motor sales office.
- Oriental Motor shall not be liable whatsoever for any problems relating to industrial property rights arising from use of any information, circuit, equipment or device provided or referenced in this manual.
- Characteristics, specifications and dimensions are subject to change without notice.
- While we make every effort to offer accurate information in the manual, we welcome your input. Should you find unclear descriptions, errors or omissions, please contact your nearest Oriental Motor sales office.
- ***Orientalmotor*** and CFLEX are registered trademarks or trademarks of Oriental Motor Co., Ltd., in Japan and other countries.
  Modbus is a registered trademark of the Schneider Automation Inc.
  CC-Link is a registered trademark of the CC-Link Partner Association.
  MECHATROLINK is a registered trademark of the MECHATROLINK Members Association.
  EtherCAT® is registered trademark and patented technology, licensed by Beckhoff Automation GmbH, Germany.
  Other product names and company names mentioned in this manual may be registered trademarks or trademarks of their respective companies and are hereby acknowledged. The third-party products mentioned in this manual are recommended products, and references to their names shall not be construed as any form of performance guarantee. Oriental Motor is not liable whatsoever for the performance of these third-party products.

© Copyright ORIENTAL MOTOR CO., LTD. 2010

Published in December 2025

• Please contact your nearest Oriental Motor office for further information.

ORIENTAL MOTOR U.S.A. CORP.
Technical Support Tel:800-468-3982
8:30am EST to 5:00pm PST (M-F)

ORIENTAL MOTOR (EUROPA) GmbH
Schiessstraße 44, 40549 Düsseldorf, Germany
Technical Support Tel:00 800/22 55 66 22

ORIENTAL MOTOR (UK) LTD.
Blythe Valley Business Park,
Central Blvd Blythe Valley Park,
Solihull B90 8AG, United Kingdom
Tel:+44-1926-671220

ORIENTAL MOTOR (FRANCE) SARL
Tel:+33-1 47 86 97 50

ORIENTAL MOTOR ITALIA s.r.l.
Tel:+39-02-93906347

ORIENTAL MOTOR ASIA PACIFIC PTE. LTD.
Singapore
Tel:1800-842-0280

ORIENTAL MOTOR (MALAYSIA) SDN. BHD.
Tel:1800-806-161

ORIENTAL MOTOR (THAILAND) CO., LTD.
Tel:1800-888-881

ORIENTAL MOTOR (INDIA) PVT. LTD.
Tel:1800-120-1995 (For English)
1800-121-4149 (For Hindi)

TAIWAN ORIENTAL MOTOR CO., LTD.
Tel:0800-060708

SHANGHAI ORIENTAL MOTOR CO., LTD.
Tel:400-820-6516

INA ORIENTAL MOTOR CO., LTD.
Korea
Tel:080-777-2042

ORIENTAL MOTOR CO., LTD.
4-8-1 Higashiueno, Taito-ku, Tokyo
110-8536 Japan
Tel:+81-3-6744-0361
www.orientalmotor.co.jp/ja