Oriental motor

HM-60340-2

Stepping Motor and Driver Package αSTEP

AR Series/ Motorized actuator equipped with AR Series

AC power input/DC power input FLEX Built-in Controller Type

USER MANUAL

- **AC power input**

KCC-REM-OMC-058
KCC-REM-OMC-059

- **DC power input**

KCC-REM-OMC-068

Introduction

AC power input type

DC power input type

AC power input type/ DC power input type Common

Operation type and setting

Method of control via Modbus RTU (RS-485 communication)

Method of control via industrial network

Appendix

Thank you for purchasing an Oriental Motor product.
This Manual describes product handling procedures and safety precautions.

- Please read it thoroughly to ensure safe operation.
- Always keep the manual where it is readily available.

1 Introduction

1 Before use 10

2 Operating Manuals for the AR Series 11

3 Overview of the product 12

4 Safety precautions 14

4-1 Safety precautions 14

4-2 Handling the battery 16

4-3 Graphical symbols on the driver's front panel 17

4-4 Warning sign 17

5 Precautions for use 18

2 AC power input type

1 System configuration 24

2 Preparation 25

2-1 Checking the product 25

2-2 How to identify the product model 26

2-3 Information about nameplate 27

2-4 Combinations of motors and drivers 27

2-5 Input/output power ratings 29

2-6 Names and functions of parts 29

3 Installation 32

3-1 Location for installation 32

3-2 Installing the motor 32

3-3 Installing a load 33

3-4 Permissible radial load and permissible axial load 34

3-5 Installing the driver 37

3-6 Installing the regeneration resistor 38

3-7 Installing the battery 38

4 Connection 39

4-1 Connection example 39

4-2 Grounding the motor and driver 40

4-3 Connecting the main power supply 41

4-4 Connecting the 24 VDC power supply, regeneration resistor and electromagnetic brake 42

4-5 Connecting the I/O signals 44

4-6 Connecting the data setter 47

4-7 Connecting the RS-485 communication cable 47

4-8 Connecting and charging the battery 48

4-9 Noise measures 48

4-10 Installing and wiring in compliance with EMC Directive 49

5 Accessories 51

5-1 Motor cable set 51

5-2 Setting tool 53

5-3 Wiring support tool 53

5-4 Others 54

3 DC power input type

1 System configuration 56

2 Preparation 57

2-1 Checking the product 57
2-2 How to identify the product model 58
2-3 Information about nameplate 59
2-4 Combinations of motors and drivers 59
2-5 Input/output power ratings 61
2-6 Names and functions of parts 61

3 Installation 64

3-1 Location for installation 64
3-2 Installing the motor 64
3-3 Installing a load 65
3-4 Permissible radial load and permissible axial load 66
3-5 Installing the driver 69
3-6 Installing the battery 70

4 Connection 71

4-1 Connection example 71
4-2 Grounding the motor and driver 72
4-3 Connecting the power supply and electromagnetic brake 73
4-4 Connecting the I/O signals 74
4-5 Connecting the data setter 77
4-6 Connecting the RS-485 communication cable 77
4-7 Connecting and charging the battery 78
4-8 Noise measures 78
4-9 Conformity to the EMC Directive 79

5 Accessories 81

5-1 Motor cable set 81
5-2 Setting tool 83
5-3 Wiring support tool 83
5-4 Others 84

4 AC power input type/DC power input type Common

1 Explanation of I/O signals 86

1-1 Assignment of direct I/O 86
1-2 Assignment of remote I/O 90
1-3 Input signals 94
1-4 Output signals 100
1-5 Sensor inputs 105
1-6 General signals (R0 to R15) 106

2 Method of control via I/O 107

2-1 Guidance 107
2-2 Operation data 111
2-3 Parameters 112

3 Operation using the OPX-2A 123

3-1 Overview of the **OPX-2A** 123
3-2 Names and functions of parts 124
3-3 How to read the display 124
3-4 **OPX-2A** error display 125
3-5 Screen transitions 126

3-6 Monitor mode 130
3-7 Data mode 131
3-8 Parameter mode 134
3-9 Test mode 141
3-10 Copy mode 143
4 Inspection and maintenance 144
4-1 Inspection 144
4-2 Warranty 144
4-3 Disposal 144
5 Alarms and warnings 145
5-1 Alarms 145
5-2 Warning 152
5-3 Communication errors 153
6 Troubleshooting and remedial actions 154

5 Operation type and setting

1 Guidance 156
2 Adjustment and setting 160
2-1 Resolution 160
2-2 Operating current 161
2-3 Standstill current 161
2-4 Acceleration/deceleration rate and acceleration/deceleration time 162
2-5 Smooth drive 162
2-6 Speed filter 163
2-7 Moving average filter 164
2-8 Speed error gain 164
2-9 Control mode 165
2-10 Position loop gain, speed loop gain, speed loop integral time constant 165
2-11 Absolute-position backup system 166
3 Operation type and function list 167
4 Positioning operation 168
4-1 Operation data 168
4-2 Starting method of positioning operation 170
4-3 Operation function 175
4-4 Push-motion operation 179
5 Return-to-home operation 182
5-1 Operation sequence 185
5-2 Position preset 189
6 Continuous operation 190
6-1 Starting method of continuous operation 191
6-2 Variable speed operation 193
7 Other operation 195
7-1 JOG operation 195
7-2 Test operation 196
7-3 Automatic return operation 197
7-4 Stop operation 198
8 Coordination management 200
8-1 Position coordinate management 200
8-2 Wrap function 201

6 Method of control via Modbus RTU (RS-485 communication)

1 Guidance 204

2 Communication specifications 210

3 Setting the switches 213

3-1 Setting the AC power input 213

3-2 Setting the DC power input 215

4 Setting of RS-485 communication 217

5 Communication mode and communication timing 218

5-1 Communication mode 218

5-2 Communication timing 218

6 Message 219

6-1 Query 219

6-2 Response 221

7 Function code 223

7-1 Reading from a holding register(s) (03h) 223

7-2 Writing to a holding register (06h) 224

7-3 Diagnosis (08h) 225

7-4 Writing to multiple holding registers (10h) 226

8 Register address list 228

8-1 Operation commands 228

8-2 Maintenance commands 230

8-3 Monitor commands 231

8-4 Parameter R/W commands 234

9 Group send 246

10 Setting example of the operation 248

10-1 Positioning operation 248

10-2 Continuous operation 251

10-3 Return-to-home operation 253

11 Detection of communication errors 255

11-1 Communication errors 255

11-2 Alarms and warnings 255

12 Timing charts 256

7 Method of control via industrial network

1 Setting the switches 260

1-1 Setting the AC power input 260

1-2 Setting the DC power input 262

2 Method of control via CC-Link communication 264

2-1 Guidance 264

2-2 Operation example of command selection method 269

2-3 Operation example of command fixation method 277

3 Method of control via EtherCAT communication 283

3-1 Guidance 283

3-2 Basic operating procedures 289

4 Details of remote I/O 292

4-1 Input signals to the driver 292

4-2 Output signals from the driver 293

5 Command code list 295
5-1 Group function 295
5-2 Maintenance command 296
5-3 Monitor command 297
5-4 Operation data 299
5-5 User parameters 300

8 Appendix

1 Timing charts 310
2 Specifications 321
3 General specifications 322
3-1 AC power input 322
3-2 DC power input 323
4 Regulations and standards 324
4-1 UL Standards 324
4-2 EU Directives 324
4-3 Republic of Korea, Radio Waves Act 325
4-4 RoHS Directive 325

Specification Change of Driver

Some specifications have been changed in this product. There are differences in data setting range, etc. between the product after the change and before the change. For the driver before the specification change, contact your nearest Oriental Motor sales office.

This manual describes contents of the driver which is after the specification change.
When using the driver which is before the specification change, take note of the following points.

1. Some setting items have been changed

■ Push current

Before the specification change	→	After the specification change
0 to 500 (1=0.1%)		0 to 1000 (1=0.1%)

■ NET-IN input function

The following input signals can be assigned in the product after the specification change.

- 24: ALM-RST
- 25: P-PRESET
- 26: P-CLR

■ Pay attention to the data update

- **When the data is set using the MEXE02, use the MEXE02 which software version is 3.00 or later**

  If the **MEXE02** is older version than 3.00, the value after the specification change can not be set.

- **When the following data passing is performed, the most recent value will not be effective**

  1) When the MEXE02 data which has set the value after the specification change is opened using the older MEXE02 than the Version 3.00

  If the data is opened by the older **MEXE02** than the Version 3.00, the data will be changed to the initial value.

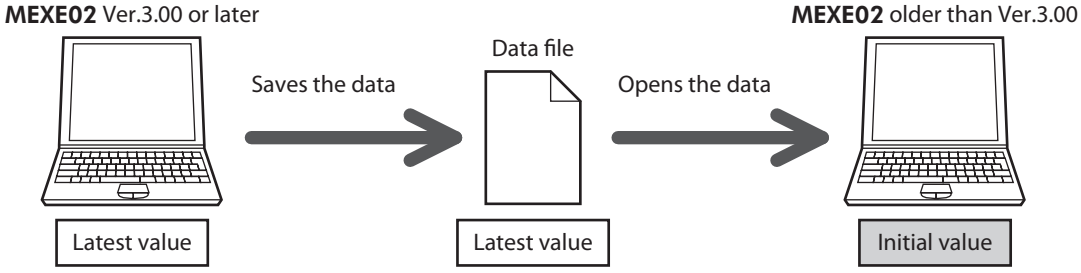

  2) When the OPX-2A data which has set the value after the specification change is downloaded to the driver that is before the specification change

The value which is after the specification change will not be updated to the driver which is before the specification change, and the value presently set is kept.

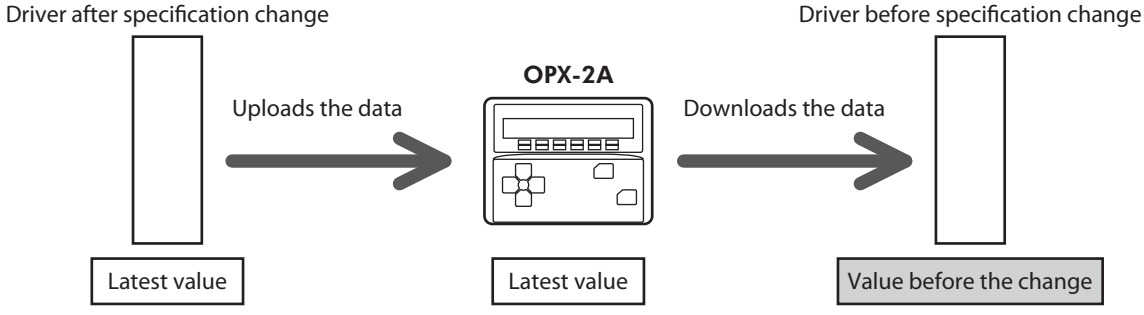

2. The upper limit of the alarm output has been changed

The maximum speed for push-motion operation has been changed. If push-motion operation is started after setting higher speed than 30 r/min in the driver which is before the specification change, an operation data error alarm will generate.

■ Maximum speed for push-motion operation

Before the specification change		After the specification change
30 r/min	➔	500 r/min

1 Introduction

This part explains the product overview and safety precautions in addition to the types and descriptions about operating manuals.

◆Table of contents

1 Before use 10

2 Operating Manuals for the AR Series 11

3 Overview of the product 12

4 Safety precautions 14

4-1 Safety precautions 14

4-2 Handling the battery 16

4-3 Graphical symbols on the driver's front panel 17

4-4 Warning sign 17

5 Precautions for use 18

1 Before use

Only qualified personnel should work with the product.
Use the product correctly after thoroughly reading the section "4 Safety precautions" on p.14. In addition, be sure to observe the contents described in warning, caution, and note in this manual.
The product described in this manual has been designed and manufactured to be incorporated in general industrial equipment. Do not use for any other purpose. Oriental Motor Co., Ltd. is not responsible for any damage caused through failure to observe this warning.

2 Operating Manuals for the AR Series

Operating manuals for the **AR** Series FLEX Built-in controller type are listed below.
After reading the manuals, keep them in a convenient place where it is readily available.

Type and description of operating manuals	
Read these manuals first	
AR Series AC power input/DC power input • OPERATING MANUAL Motor (supplied with the motor) • OPERATING MANUAL Built-in controller type Driver (supplied with the driver)	These manuals explain functions, installation methods and others.
AR Series AC power input/DC power input FLEX Built-in controller type • USER MANUAL (this document)	This manual explains operating methods of the **OPX-2A**, troubleshooting, Modbus RTU control, industrial network control, and others, in addition to functions, installation and connection methods, data setting methods, and operating methods for the motor and driver.
APPENDIX UL Standards for AR Series (supplied with the product)	This appendix includes information required for certifiction of the UL Standards.
Motorized actuator • OPERATING MANUAL Actuator (supplied with the actuator) • Function Setting Edition	The Actuator Edition explains installation methods and maintenance for motorized actuators. The Function Setting Edition explains settings of parameters required for when an actuator is combined with a driver.
Network converter • USER MANUAL	This manual explains functions and installation/connection methods as well as operating methods for the network converter.

■ About terms and units

Terms and units to be used vary depending on a motor or motorized actuator. This manual explains by using the terms of the motor.
When the motorized actuator is used, read this manual by replacing the terms.

	Motor	Motorized actuator
Term	Torque	Thrust force
	Moment of inertia	Mass
	Rotation	Movement
	CW direction	FWD direction
	CCW direction	RVS direction
	Rotation speed	Speed
	Resolution	Minimum travel amount
Unit	N·m	N
	kHz/s	m/s^2

3 Overview of the product

This product is a motor and driver package product consisting of a stepping motor equipped with a rotor position detection sensor, and a driver with built-in controller function. This product can be controlled via I/O, Modbus (RTU) or industrial network communication using the network converter.
The operation data and parameters can be set using a support software **MEXE02**, accessory data setter **OPX-2A** or via RS-485 communication.

■ Main features

- **Introducing closed loop control**

  The **AR** Series can continue its operation even upon encountering quick acceleration or an abrupt change in load. Monitoring the speed and amount of rotation while the motor is running, the **AR** Series performs the closed-loop control under overload and similar conditions to continue its operation at the maximum torque.

- **Three operation types**

  You can perform positioning operation, return-to-home operation and continuous operation.
  Up to 64 operation data points can be set, and multi-point positioning is also possible.

- **Compatible with Modbus RTU (RS-485 communication)**

  You can set operation data and parameters or issue operation start/stop commands from the master controller.
  Up to 31 drivers can be connected to one master.

- **Absolute-position backup system**

  When connecting an accessory battery set, this product can be used in the absolute-position backup system. Positions will be retained in the event of a power outage or after turning off the driver power.

- **Energy-saving**

  Motor and driver losses have been substantially reduced to achieve low heat generation and save energy.
  Since the motor and driver generate much less heat, they can now be operated for longer hours at high speed, which was not possible with conventional motors/drivers.

- **Supporting sink output and source output**

  The driver supports both the current sink output circuit and the current source output circuit.

- **Automatic control of the electromagnetic brake**

  This driver controls the electromagnetic brake automatically. The control signal input or the troublesome ladder logic design can be saved.

- **Alarm and warning functions**

  The driver provides alarms that are designed to protect the driver from overheating, poor connection, error in operation, etc. (protective functions), as well as warnings that are output before the corresponding alarms generate (warning functions).

■ Accessories

The operation data and parameters can be set using a support software **MEXE02**, accessory data setter **OPX-2A** or via RS-485 communication. Provide the **MEXE02** or **OPX-2A** as necessary.

- **MEXE02**.....The **MEXE02** can be downloaded from Oriental Motor Website Download Page.
  When the **MEXE02** is used, a communication cable for support software **CC05IF-USB** (accessory) is needed to connect a PC and driver. Be sure to purchase it.
- **OPX-2A**.....This product can be purchased separately.

■ Related products

The **AR** Series FLEX built-in controller type can be used via various network when connecting to a network converter.

Network converter model	Supported network
NETC01-CC	CC-Link Ver.1.1
NETC02-CC	CC-Link Ver.2
NETC01-M2	MECHATROLINK-II
NETC01-M3	MECHATROLINK-III
NETC01-ECT	EtherCAT

■ Function list

Main functions

Return-to-home operation [Setting by parameters]	● **2-sensor mode** ● **3-sensor mode** ● **Push-mode** ● **Data setting mode (Position preset)**
Motor operation [Setting by operation data and parameters]	● **Positioning operation** **Operation function**: Single-motion operation, Linked-motion operation, Linked-motion operation 2, Push-motion + **Starting method**: Data number selecting operation, Direct positioning operation, Sequential positioning operation ● **Continuous operation**
Other operations [Setting by parameters]	● **JOG operation** ● **Automatic return operation**

Support functions

[Setting by parameters]	● **Protective function** Alarm detection Warning detection ● **I/O function** Input function selection Output function selection Input logic level setting ● **Coordination setting** Resolution (Electronic gear) Wrap function Motor rotation direction ● **Return-to-home function** Home position offset External sensor signal detection ● **Stop operation** STOP input action Hardware overtravel Software overtravel ● **Motor function setting** Operating current Standstill current Speed filter Moving average filter

External interface

Data setter	● **Monitor function** ● **Operation data setting** ● **Parameter setting** ● **Data storing** ● **Download/Upload** ● **Data initialization** ● **Test function** Test operation Teaching I/O test
RS-485 communication	● **Operation start** ● **Operation data setting** ● **Parameter setting** ● **Monitor function** ● **Maintenance function**

4 Safety precautions

4-1 Safety precautions

The precautions described below are intended to prevent danger or injury to the user and other personnel through safe, correct use of the product. Use the product only after carefully reading and fully understanding these instructions.

⚠Warning	Handling the product without observing the instructions that accompany a "Warning" symbol may result in serious injury or death.
⚠Caution	Handling the product without observing the instructions that accompany a "Caution" symbol may result in injury or property damage.
Note	The items under this heading contain important handling instructions that the user should observe to ensure safe use of the product.

⚠Warning

■ AC power input/DC power input common

General

- Do not use the product in explosive or corrosive environments, in the presence of flammable gases, locations subjected to splashing water, or near combustibles. Doing so may result in fire, electric shock or injury.
- Assign qualified personnel the task of installing, wiring, operating/controlling, inspecting and troubleshooting the product. Failure to do so may result in fire, electric shock, injury or damage to equipment.
- Do not transport, install the product, perform connections or inspections when the power is on. Always turn the power off before carrying out these operations. Failure to do so may result in electric shock.
- Provide means to hold the moving parts in place for vertical drive such as elevating equipment. The motor loses holding torque when the power is shut off, allowing the moving parts to fall and possibly cause injury or damage to equipment.
- The brake mechanism of an electromagnetic brake motor is used to keep the moving part and motor in position. Do not use it as a deceleration/safety brake. Doing so may result in injury or damage to the equipment.
- When the driver generates an alarm (any of the driver's protective functions is triggered), the motor will stop and lose its holding torque. Accordingly, provide measures to hold the moving part in place in the event of an alarm. Failure to do so may result in injury or equipment damage.
- When the driver generates an alarm (any of the driver's protective functions is triggered), first remove the cause and then clear the protection function. Continuing the operation without removing the cause of the problem may cause malfunction of the motor and driver, leading to injury or damage to equipment.

Installation

- Install the motor and driver in the enclosure in order to prevent electric shock or injury.

Connection

- Keep the driver's input power voltage within the specified range. Failure to do so may result in fire or electric shock.
- Connect the cables securely according to the wiring diagram. Failure to do so may result in fire or electric shock.
- Do not forcibly bend, pull or pinch the cable. Doing so may fire and electric shock.
- Turn off the power to both the PC and driver before connecting your PC to the driver. Failure to do so may result in electric shock.

Operation

- Turn off the driver power in the event of a power failure. Or the motor may suddenly start when the power is restored and may cause injury or damage to equipment.
- Do not turn the FREE input to ON while the motor is operating. The motor will stop and lose its holding power. Doing so may result in injury or damage to equipment.

Repair, disassembly and modification

- Do not disassemble or modify the motor and driver. This may cause electric shock or injury. Refer all such internal inspections and repairs to the branch or sales office from which you purchased the product.

■ AC power input

Installation

- The motor and driver are Class I equipment. When installing the motor and driver, do not touch the driver without grounding the driver first. Doing so may result in electric shock.

Maintenance and inspection

- Do not touch the connection terminals on the driver while the power is supplied or for at least 10 minutes after turning off the power. Before making wiring connections or carrying out checks, also wait for the CHARGE LED to turn off and check the voltage with a tester, etc. Failure to do so may result in electric shock.

■ DC power input

Installation

- When installing the motor and driver, do not touch the driver without grounding the driver first. Doing so may result in electric shock.

Connection

- For the driver's power supply, use a DC power supply with reinforced insulation on its primary and secondary sides. Failure to do so may result in electric shock.

⚠Caution

■ AC power input/DC power input common

General

- Do not use the motor and driver beyond its specifications. Doing so may result in electric shock, injury or damage to equipment.
- Keep your fingers and objects out of the openings in the motor and driver. Failure to do so may result in fire, electric shock or injury.
- Do not touch the motor and driver during operation or immediately after stopping. The surface is hot and may cause a skin burn(s).
- Do not use other batteries than the accessory dedicated battery. Doing so may result in injury or damage to equipment.

Transportation

- Do not carry the motor by holding the motor output shaft or motor cable. Doing so may cause injury.

Installation

- Provide a cover over the rotating parts (output shaft) of the motor. Failure to do so may result in injury.
- Do not leave anything around the motor and driver that would obstruct ventilation. Doing so may result in damage to equipment.

Operation

- Use a motor and driver only in the specified combination. An incorrect combination may cause a fire.
- Provide an emergency stop device or emergency stop circuit external to the equipment so that the entire equipment will operate safely in the event of a system failure or malfunction. Failure to do so may result in injury.
- Before supplying power to the driver, turn all input signals to the driver OFF. Otherwise, the motor may start suddenly at power ON and cause injury or damage to equipment.
- The motor surface temperature may exceed 70 °C (158 °F) even under normal operating conditions. If the operator is allowed to approach the running motor, attach a warning label as shown below in a conspicuous position. Failure to do so may result in skin burn(s).

Warning label

- Before moving the motor directly with the hands, confirm that the FREE input turns ON. Failure to do so may result in injury.
- Do not touch the rotating part (output shaft) during operation. Doing so may cause injury.
- Immediately when trouble has occurred, stop running and turn off the driver power. Failure to do so may result in fire, electric shock or injury.
- To prevent electric shock, use only an insulated screwdriver to adjust the driver's switches.

Maintenance and inspection

- When the insulation resistance measurement or dielectric strength test is conducted, do not touch the terminals. Doing so may result in electric shock.

■ AC power input

Connection

- The data edit connector (CN4) and RS-485 communication connector (CN6/CN7) are not insulated. When grounding the positive terminal of the power supply, do not connect any equipment (PC, etc.) whose negative terminal is grounded. Doing so may cause the driver and these equipment to short, damaging both.

Operation

- Use a 24 VDC power supply that has been given reinforced insulation between the primary side and secondary side. Failure to do so may cause electric shock.

■ DC power input

Connection

- The power supply connector (CN1), data edit connector (CN3) and RS-485 communication connector (CN6/CN7) are not insulated. When grounding the positive terminal of the power supply, do not connect any equipment (PC, etc.) whose negative terminal is grounded. Doing so may cause the driver and these equipment to short, damaging both.
- When connecting, check the silk screen of the driver and pay attention to the polarity of the power supply. Reverse-polarity connection may cause damage to the driver. The power-supply circuit and the RS-485 communication circuit are not insulated. Therefore, when controlling multiple drivers via RS-485 communication, the reverse polarity of the power supply will cause a short circuit and may result in damage to the drivers.

Operation

- For the power supply to the electromagnetic brake, use a DC power supply with reinforced insulation on its primary and secondary sides. Failure to do so may result in electric shock.

4-2 Handling the battery

Be sure to observe the following instructions when using the accessory battery. Handling the battery without observing the instructions may cause the liquid leakage, heat generation and explosion, etc., which may result in injury or damage to equipment.

⚠Warning

- Do not heat the battery or throw it into a fire.
- Never short-circuit the battery or connect the positive and negative terminals in reverse.
- When carrying/storing the battery, do not place it together with metal necklaces, hairpins, coins, keys or other conductive objects. When storing the battery, store it away from direct sunlight in a place not subject to high temperature or high humidity.
- Do not disassemble or modify the battery.
- Do not apply solder directly to the battery.
- Use a dedicated driver to charge the battery.
- The battery has a vent structure for the release of internal gas. Do not apply a strong force to the battery, since it may cause this structure to deform.
- When installing the battery into the machine, never place it inside a sealed structure. The battery sometimes generates gas, which, if trapped, may cause a burst or an explosion due to ignition.
- The battery contains an alkali solution. If the alkali solution comes in contact with the skin or clothes, flush the area thoroughly with clean water. If the alkali solution gets into the eyes, do not rub. Flush the eyes thoroughly with clean water and seek immediate medical attention.
- Do not use the battery if there is leakage, discoloration, deformation or another abnormality.
- Do not immerse the battery in water or seawater, nor allow it to become wet. Doing so may cause the battery to generate heat or rust.
- Do not scratch the battery and battery cable. A scratched battery easily causes shorting, resulting in leakage, heat generation or bursting.
- The battery is connected to the primary circuit, so do not touch the battery while the power is on.
- Do not forcibly bend, pull or pinch the cable. Also, do not bend and flex the cable repeatedly.
- Do not make a continuous vibration or excessive impact.

Note

- Always charge the battery connecting to the driver before use. For charging method, refer to p.48 (AC power input), p.78 (DC power input).
- Nickel-metal-hydride cell is used in this battery. Disposal of the used batteries is subject to each country's regulations on environmental control. Contact your nearest Oriental Motor office if you have any questions.

Ni-MH

4-3 Graphical symbols on the driver's front panel

	⚠Warning	This is the Protective Earth Terminal. Be sure to ground because improper grounding may result in electric shock.
	⚠Warning	A high voltage is applied to the motor connector (CN2) and the main power supply input terminal (CN3). Do not touch these terminals while the power is on. Doing so may result in fire or electric shock. (AC power input)

4-4 Warning sign

A warning about handling precautions is described on the driver and battery.
Be sure to observe the description contents when handling the driver or battery.

- **Driver (AC power input)**

Electrical hazard warning label

Material: PET

- **Battery**

Electrical hazard warning label

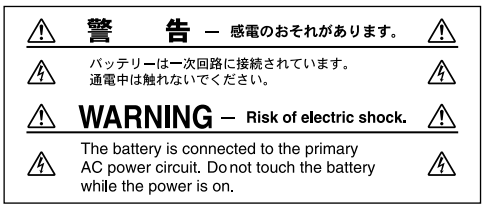

Material: Polypropylene

5 Precautions for use

This section covers limitations and requirements the user should consider when using the product.

■ AC power input/DC power input common

- **Always use the cable (supplied or accessory) to connect the motor and driver.**

  Be sure to use the cable (supplied or accessory) to connect the motor and driver.
  In the following condition, an appropriate accessory cable must be purchased separately. For details, refer to p.51 (AC power input), p.81 (DC power input).
  - If a flexible cable is to be used.
  - If a cable of 3 m (9.8 ft.) or longer is to be used.
  - If a motor and driver package without a cable was purchased.

  Note Precautions for when the connection cable is used are described on p.20. Be sure to read before use.

- **When conducting the insulation resistance measurement and the dielectric strength test, be sure to separate the connection between the motor and the driver.**

  Conducting the insulation resistance measurement or dielectric strength test with the motor and driver connected may result in damage to equipment.

- **Do not apply a radial load and axial load in excess of the specified permissible limit.**

  Operating the motor under an excessive radial load or axial load may damage the motor bearings (ball bearings). Be sure to operate the motor within the specified permissible limit of radial load and axial load. For details, refer to p.34 (AC power input), p.66 (DC power input).

- **Use the motor in conditions where its surface temperature will not exceed 100 °C (212 °F).**

  The driver has an overheat protection function, but the motor has no such feature. The motor surface temperature may exceed 100 °C (212 °F) under certain conditions (ambient temperature, operating speed, duty cycle, etc.). To prevent the motor bearings (ball bearings) from reaching its usable life quickly, use the motor in conditions where the surface temperature will not exceed 100 °C (212 °F).
  Use the geared type motor in a condition where the gear case temperature does not exceed 70 °C (158 °F), in order to prevent deterioration of grease and parts in the gear case.
  If the motor is to be operated continuously, install the motor in a location where heat dissipation capacity equivalent to a level achieved with a heat sink [made of aluminum, 250×250×6 mm (9.84×9.84×0.24 in.)] is ensured.

- **Holding torque at standstill**

  The motor holding torque is reduced by the current cutback function of the driver at motor standstill. When selecting a motor, check the holding torque at motor standstill in the specifications on the catalog.

- **Do not use the electromagnetic brake to reduce speed or as a safety brake.**

  Do not use the electromagnetic brake as a means to decelerate and stop the motor. The brake hub of the electromagnetic brake will wear significantly and the braking force will drop. Since the power off activated type electromagnetic brake is equipped, it helps maintain the position of the load when the power is cut off, but this brake cannot securely hold the load in place. Accordingly, do not use the electromagnetic brake as a safety brake. To use the electromagnetic brake to hold the load in place, do so after the motor has stopped.

- **Double shaft type motor**

  Do not apply a load torque, radial load or axial load to the output shaft on the opposite side of the motor output shaft.

- **Preventing electrical noise**

  For measures with regard to noise, refer to p.48 (AC power input), p.78 (DC power input).

- **Rotating direction of output shaft**

  The motor output shaft rotates as shown in the figure for the parameters of the factory setting.

  • When setting the position (travel amount) to a positive value

  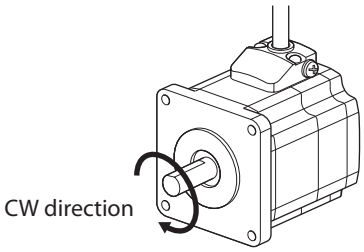

  • When setting the position (travel amount) to a negative value

  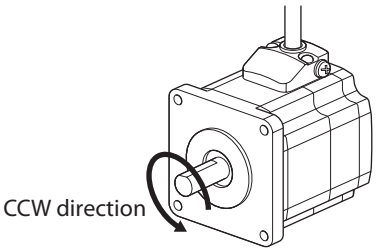

  The relationship between the rotating direction of the motor shaft and that of the gear output shaft changes as follows, depending on the gear type and gear ratio. Check with the following table.

Type of gear	Gear ratio	Rotating direction (relative to the motor rotating direction)
TH geared	3.6, 7.2, 10	Same direction
	20, 30	Opposite direction
FC geared, **PS** geared, **PN** geared	All gear ratios	Same direction
Harmonic geared	All gear ratios	Opposite direction

- **Peak torque of geared type motor**

  Always operate the geared type motor under a load not exceeding the peak torque. If the load exceeds the peak torque, the gear will be damaged.

- **About grease of geared motor**

  On rare occasions, a small amount of grease may ooze out from the geared motor. If there is concern over possible environmental damage resulting from the leakage of grease, check for grease stains during regular inspections. Alternatively, install an oil pan or other device to prevent leakage from causing further damage. Oil leakage may lead to problems in the customer's equipment or products.

- **Do not perform push-motion operation with geared motors.**

  Doing so may result in damage to the motor or gear part.

- **Saving data to the non-volatile memory**

  Do not turn off the main power supply or DC power supply while data is being written to the non-volatile memory and 5 seconds after the completion of data write. Doing so may abort the data write and cause an EEPROM error alarm to generate. The non-volatile memory can be rewritten approximately 100,000 times.

- **Motor excitation at power ON**

  The motor is excited when the DC power supply and main power supply are on. If the motor is required to be in a non-excitation state when turning on the power, assign the C-ON input to direct I/O or remote I/O before starting control.

- **Operation of multi-rotation for absolute-position backup system ***

  • Even if the present position is preset, the operation range of multi-rotation (−167,772 to +167,772 revolutions) is not changed because the driver stores the position from the home position.
  • If the power is turned on again while the operation range of multi-rotation (−167,772 to +167,772 revolutions) is being exceeded, an alarm of the absolute position error generates. Reset the alarm of the absolute position error with either of the following methods.
  – Turn the P-CLR input from ON to OFF. (effective at the OFF edge of the P-CLR input).
  – Reset the absolute position error alarm using the **MEXE02**, **OPX-2A** or via RS-485 communication.

  * Operation of multi-rotation refers to repeating continuous operation to the same direction or positioning operation.

■ AC power input

- **Preventing leakage current**

  Stray capacitance exists between the driver's current-carrying line and other current-carrying lines, the earth and the motor, respectively. A high-frequency current may leak out through such capacitance, having a detrimental effect on the surrounding equipment. The actual leakage current depends on the driver's switching frequency, the length of wiring between the driver and motor, and so on. When providing a leakage current breaker, use the following products, for example, which have high-frequency signal protection:
  Mitsubishi Electric Corporation: NV series

- **When an alarm of overvoltage protection is generated**

  If vertical drive (gravitational operation) such as elevator applications is performed or if sudden start-stop operation of a large inertial load is repeated frequently, an alarm of overvoltage protection may be detected. If the overvoltage protection alarm is detected, adjust the driving condition or use the accessory regeneration resistor.

- **Note on connecting a power supply whose positive terminal is grounded**

  The data edit connector (CN4) and RS-485 communication connector (CN6/CN7) are not insulated. When grounding the positive terminal of the power supply, do not connect any equipment (PC, etc.) whose negative terminal is grounded. Doing so may cause the driver and these equipment to short, damaging both. Use the data setter **OPX-2A** to set data, etc.

■ DC power input

- **When an alarm of overvoltage protection is generated**

  If vertical drive (gravitational operation) such as elevator applications is performed or if sudden start-stop operation of a large inertial load is repeated frequently, an alarm of overvoltage protection may be detected. If an overvoltage protection alarm is detected, adjust the driving condition.

- **Note on connecting a power supply whose positive terminal is grounded**

  The power supply connector (CN1), data edit connector (CN3) and RS-485 communication connector (CN6/CN7) are not insulated. When grounding the positive terminal of the power supply, do not connect any equipment (PC, etc.) whose negative terminal is grounded. Doing so may cause the driver and these equipment to short, damaging both. Use the data setter **OPX-2A** to set data, etc.

■ Notes for when the connection cable is used

Note the following points when a supplied cable or an accessory cable is used.

- **When inserting the connector**

  Hold the connector main body, and insert it in straight securely.
  Inserting the connector in a inclined state may result in damage to terminals or a connection failure.

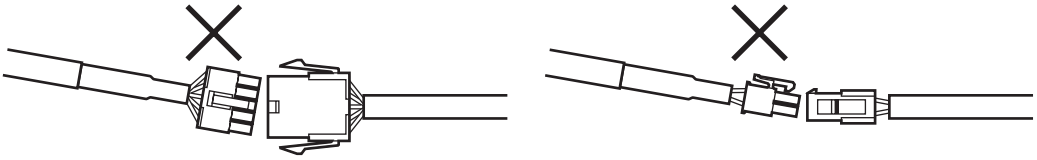

- **When pulling out the connector**

  Pull out the connector in straight while releasing the lock part of the connector. Pulling out the connector with holding the cable (lead wire) may result in damage to the connector.

- **Bending radius of cable**

  Use the cable in a state where the bending radius of the cable is more than 6 times of the cable diameter.
  In the case of the lead wire type, use in a state where the bending radius is more than 4 times of the diameter of the lead wires.

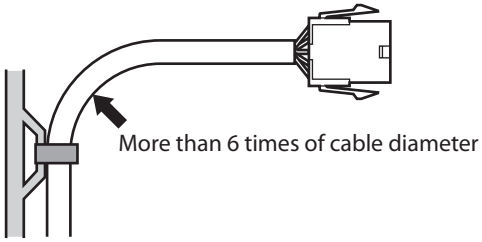

- **How to fix the cable**

  Fix the cable at the positions near the connector so as to apply no stress on the connector part.
  Take measures so as to apply no stress on the connector by using wide clamps or by fixing at two places.

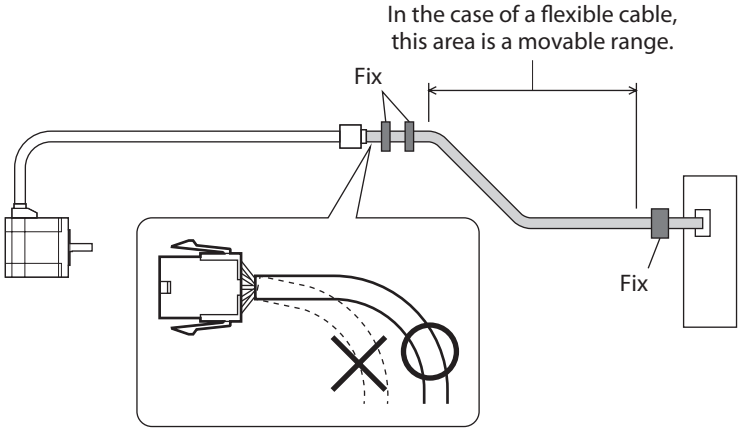

2 AC power input type

This part explains contents specific to the AR Series AC power input type.

◆Table of contents

1 System configuration 24

2 Preparation 25

2-1 Checking the product 25
2-2 How to identify the product model 26
2-3 Information about nameplate 27
2-4 Combinations of motors and drivers 27
2-5 Input/output power ratings 29
2-6 Names and functions of parts 29

3 Installation 32

3-1 Location for installation 32
3-2 Installing the motor 32
3-3 Installing a load 33
3-4 Permissible radial load and permissible axial load 34
3-5 Installing the driver 37
3-6 Installing the regeneration resistor 38
3-7 Installing the battery 38

4 Connection 39

4-1 Connection example 39
4-2 Grounding the motor and driver 40
4-3 Connecting the main power supply 41
4-4 Connecting the 24 VDC power supply, regeneration resistor and electromagnetic brake 42
4-5 Connecting the I/O signals 44
4-6 Connecting the data setter 47
4-7 Connecting the RS-485 communication cable 47
4-8 Connecting and charging the battery 48
4-9 Noise measures 48
4-10 Installing and wiring in compliance with EMC Directive 49

5 Accessories 51

5-1 Motor cable set 51
5-2 Setting tool 53
5-3 Wiring support tool 53
5-4 Others 54

1 System configuration

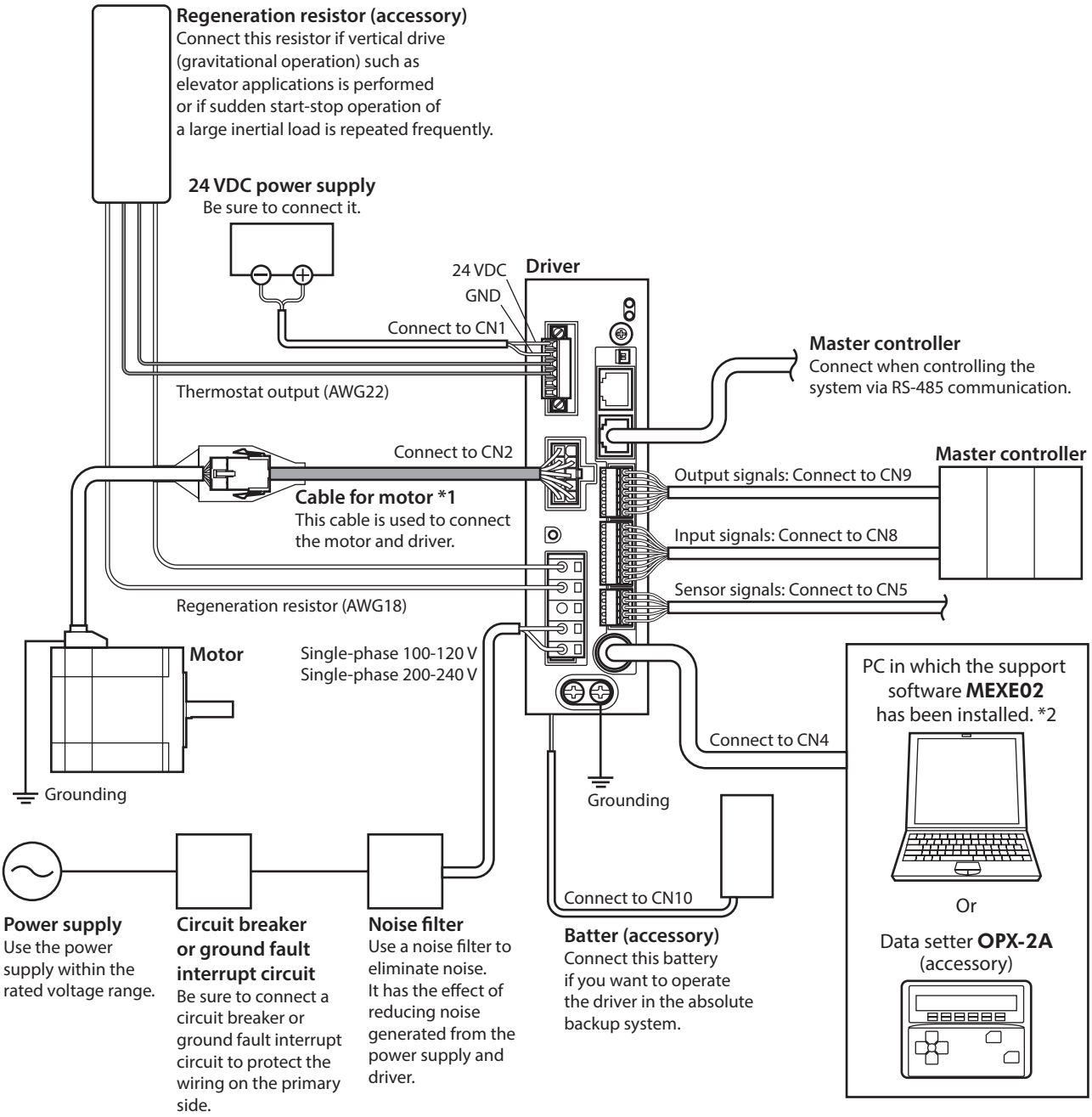

*1 Cables represented in gray color are supplied with the product or sold separately.

*2 The PC must be supplied by the user. Use the accessory communication cable for the support software when connecting the PC and driver.

2 Preparation

This chapter explains the items you should check, as well as the name and function of each part.

2-1 Checking the product

Verify that the items listed below are included. Report any missing or damaged items to the Oriental Motor sales office from which you purchased the product.
Verify the model number of the purchased unit against the number shown on the package label.
Check the model number of the motor and driver against the number shown on the nameplate. Refer to p.27 for how to identify the nameplate.
The motor and driver package names and corresponding motor/driver combinations are listed on p.27.

- Motor.....1 unit
- Driver.....1 unit
- CN1 connector (6 pins).....1 pc.
- CN3 connector (5 pins).....1 pc.
- CN5 connector (5 pins).....1 pc.
- CN8 connector (9 pins).....1 pc.
- CN9 connector (7 pins).....1 pc.
- Connector wiring lever (for CN3).....1 pc.
- OPERATING MANUAL Motor.....1 copy
- OPERATING MANUAL Driver.....1 copy
- APPENDIX UL Stndards for **AR** Series.....1 copy
- Cable for motor.....1 pc. *1
- Cable for electromagnetic brake.....1 pc. *1 *2
- Parallel key.....1 pc. *3

*1 When the product is supplied with a connection cable.

*2 Supplied with electromagnetic brake type.

*3 Supplied with geared types; except for the **AR46TH** and **AR66TH**.

Supplied connector model

Type	Model number	Manufacturer
CN1 connector	MC1,5/6-STF-3,5	PHOENIX CONTACT GmbH & Co. KG
CN3 connector	54928-0570	Molex
CN5 connector	FK-MC0,5/5-ST-2,5	PHOENIX CONTACT GmbH & Co. KG
CN8 connector	FK-MC0,5/9-ST-2,5	PHOENIX CONTACT GmbH & Co. KG
CN9 connector	FK-MC0,5/7-ST-2,5	PHOENIX CONTACT GmbH & Co. KG

2-2 How to identify the product model

- **Standard type**

AR	6	6	A	A	D	-3
1	2	3	4	5	6	10

- **Geared type**

AR	6	6	A	A	D	-	H	50	-3
1	2	3	4	5	6		7	8	10

- **FC geared type**

AR	6	6	A	A	D	-	FC	7.2	LA	-3
1	2	3	4	5	6		7	8	9	10

1	Series name	**AR** Series
2	Motor frame size	**4**: 42 mm (1.65 in.) **6**: 60 mm (2.36 in.) **9**: 85 mm (3.35 in.) [90 mm (3.54 in.) for geared type]
3	Motor length	
4	Motor type	**A**: Single shaft **B**: Double shaft **M**: With electromagnetic brake
5	Power supply voltage	**A**: Single-phase 100-120 V **C**: Single-phase 200-240 V
6	Driver type	**D**: Built-in controller type
7	Type of gear	**T**: **TH** geared type **FC**: **FC** geared type **PS**: **PS** geared type **N**: **PN** geared type **H**: Harmonic geared type None: Standard type
8	Gear ratio	Indicates a number representing the gear ratio. Refer to the table below for the gear type and gear ratio.
9	Output shaft direction	**LA**: L axis (left side) **RA**: R axis (right side)
10	Length of connection cable	Number: Length of supplied connection cable (m) None: Without connection cable

Type of gear ratio

Type of gear	Gear ratio
TH geared type	3.6, 7.2, 10, 20, 30
FC geared type	7.2, 10, 20, 30
PS geared type	5, 7.2 (*), 10, 25, 36, 50
PN geared type	**AR46**: 5, 7.2, 10 **AR66**, **AR98**: 5, 7.2, 10, 25, 36, 50
Harmonic geared type	50, 100

* The model name is "**7**" for the gear ratio 7.2 of the **PS** geared type.

2-3 Information about nameplate

The figure shows an example.

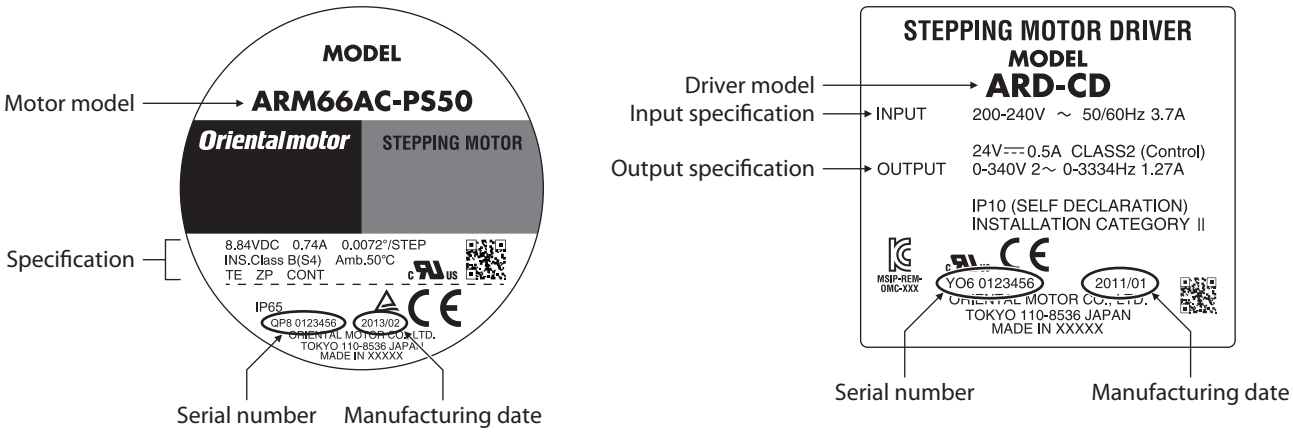

memo The position describing the information may vary depending on the product.

2-4 Combinations of motors and drivers

- ◆ in the model names represents **A** (single-phase 100-120 V) or **C** (single-phase 200-240 V) indicating the power supply input.
- ■ in the model names represents a number indicating the gear ratio.
- □ in the model names represents the cable length (**-1**, **-2**, **-3**) when the connection cable is supplied.

■ Standard type

● **Single shaft**

Model	Motor model	Driver model
AR46A◆D□	ARM46AC	ARD-◆D
AR66A◆D□	ARM66AC	
AR69A◆D□	ARM69AC	
AR98A◆D□	ARM98AC	
AR911A◆D□	ARM911AC	

● **Double shaft**

Model	Motor model	Driver model
AR46B◆D□	ARM46BC	ARD-◆D
AR66B◆D□	ARM66BC	
AR69B◆D□	ARM69BC	
AR98B◆D□	ARM98BC	
AR911B◆D□	ARM911BC	

● **With electromagnetic brake**

Model	Motor model	Driver model
AR46M◆D□	ARM46MC	ARD-◆D
AR66M◆D□	ARM66MC	
AR69M◆D□	ARM69MC	
AR98M◆D□	ARM98MC	

■ TH geared type

● **Single shaft**

Model	Motor model	Driver model
AR46A◆D-T■□	ARM46AC-T■	ARD-◆D
AR66A◆D-T■□	ARM66AC-T■	
AR98A◆D-T■□	ARM98AC-T■	

● **With electromagnetic brake**

Model	Motor model	Driver model
AR46M◆D-T■□	ARM46MC-T■	ARD-◆D
AR66M◆D-T■□	ARM66MC-T■	
AR98M◆D-T■□	ARM98MC-T■	

■ FC geared type

● **Single shaft**

Model	Motor model	Driver model
AR46A◆D-FC■LA□	ARM46AC-FC■LA	ARD-◆D
AR46A◆D-FC■RA□	ARM46AC-FC■RA	
AR66A◆D-FC■LA□	ARM66AC-FC■LA	
AR66A◆D-FC■RA□	ARM66AC-FC■RA	

■ PS geared type

● **Single shaft**

Model	Motor model	Driver model
AR46A◆D-PS■□	ARM46AC-PS■	ARD-◆D
AR66A◆D-PS■□	ARM66AC-PS■	
AR98A◆D-PS■□	ARM98AC-PS■	

● **With electromagnetic brake**

Model	Motor model	Driver model
AR46M◆D-PS■□	ARM46MC-PS■	ARD-◆D
AR66M◆D-PS■□	ARM66MC-PS■	
AR98M◆D-PS■□	ARM98MC-PS■	

■ PN geared type

● **Single shaft**

Model	Motor model	Driver model
AR46A◆D-N■□	ARM46AC-N■	ARD-◆D
AR66A◆D-N■□	ARM66AC-N■	
AR98A◆D-N■□	ARM98AC-N■	

● **With electromagnetic brake**

Model	Motor model	Driver model
AR46M◆D-N■□	ARM46MC-N■	ARD-◆D
AR66M◆D-N■□	ARM66MC-N■	
AR98M◆D-N■□	ARM98MC-N■	

■ Harmonic geared type

● **Single shaft**

Model	Motor model	Driver model
AR46A◆D-H■□	ARM46AC-H■	ARD-◆D
AR66A◆D-H■□	ARM66AC-H■	
AR98A◆D-H■□	ARM98AC-H■	

● **With electromagnetic brake**

Model	Motor model	Driver model
AR46M◆D-H■□	ARM46MC-H■	ARD-◆D
AR66M◆D-H■□	ARM66MC-H■	
AR98M◆D-H■□	ARM98MC-H■	

2-5 Input/output power ratings

- ■ in the model names represents **A** (single shaft), **B** (double shaft), or **M** (with electromagnetic brake).
  For the **AR911** standard type, ■ represents **A** (single shaft) or **B** (double shaft).
  For the geared type, ■ represents **A** (single shaft) or **M** (with electromagnetic brake).
- For geared type, ● in the model names represents the type of gear and number indicating the gear ratio.
- □ in the model names represents the cable length (**-1**, **-2**, **-3**) when the connection cable is supplied.

Model	Motor model	Driver model	Input			Output current per phase
			Voltage	Frequency	Current	
AR46■AD●□	ARM46■C●	ARD-AD	Single-phase 100-120 V	50/60 Hz	2.4 A	0.49 A
AR66■AD●□	ARM66■C●				3.6 A	0.74 A
AR69■AD□	ARM69■C				4.9 A	0.92 A
AR98■AD●□	ARM98■C●				4.6 A	1.13 A
AR911■AD□	ARM911■C				5.9 A	1.27 A
AR46■CD●□	ARM46■C●	ARD-CD	Single-phase 200-240 V		1.5 A	0.49 A
AR66■CD●□	ARM66■C●				2.3 A	0.74 A
AR69■CD□	ARM69■C				3.0 A	0.92 A
AR98■CD●□	ARM98■C●				2.9 A	1.13 A
AR911■CD□	ARM911■C				3.7 A	1.27 A

2-6 Names and functions of parts

■ Motor (Example: ARM66MC)

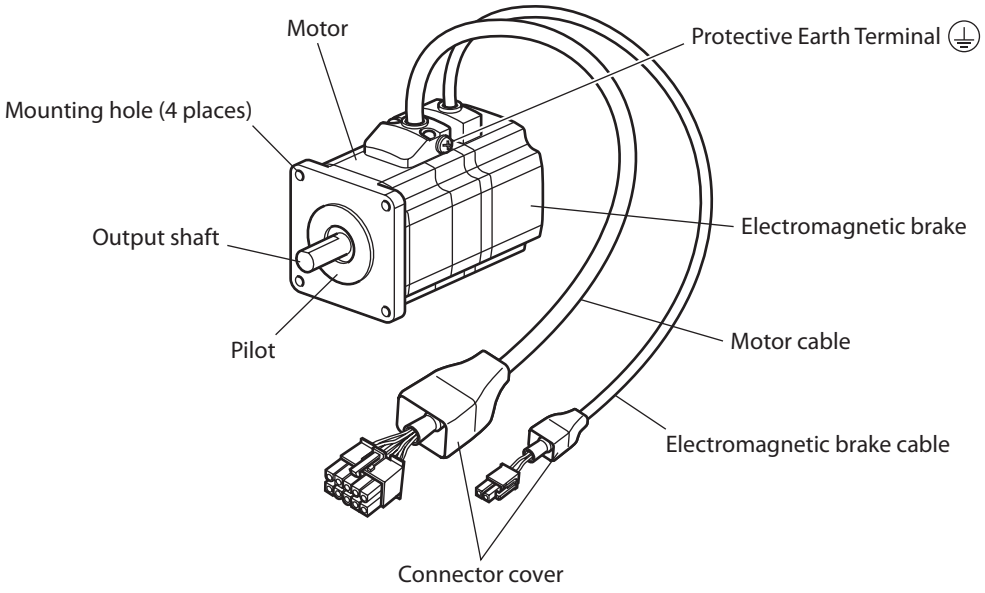

■ Driver (Example: ARD-CD)

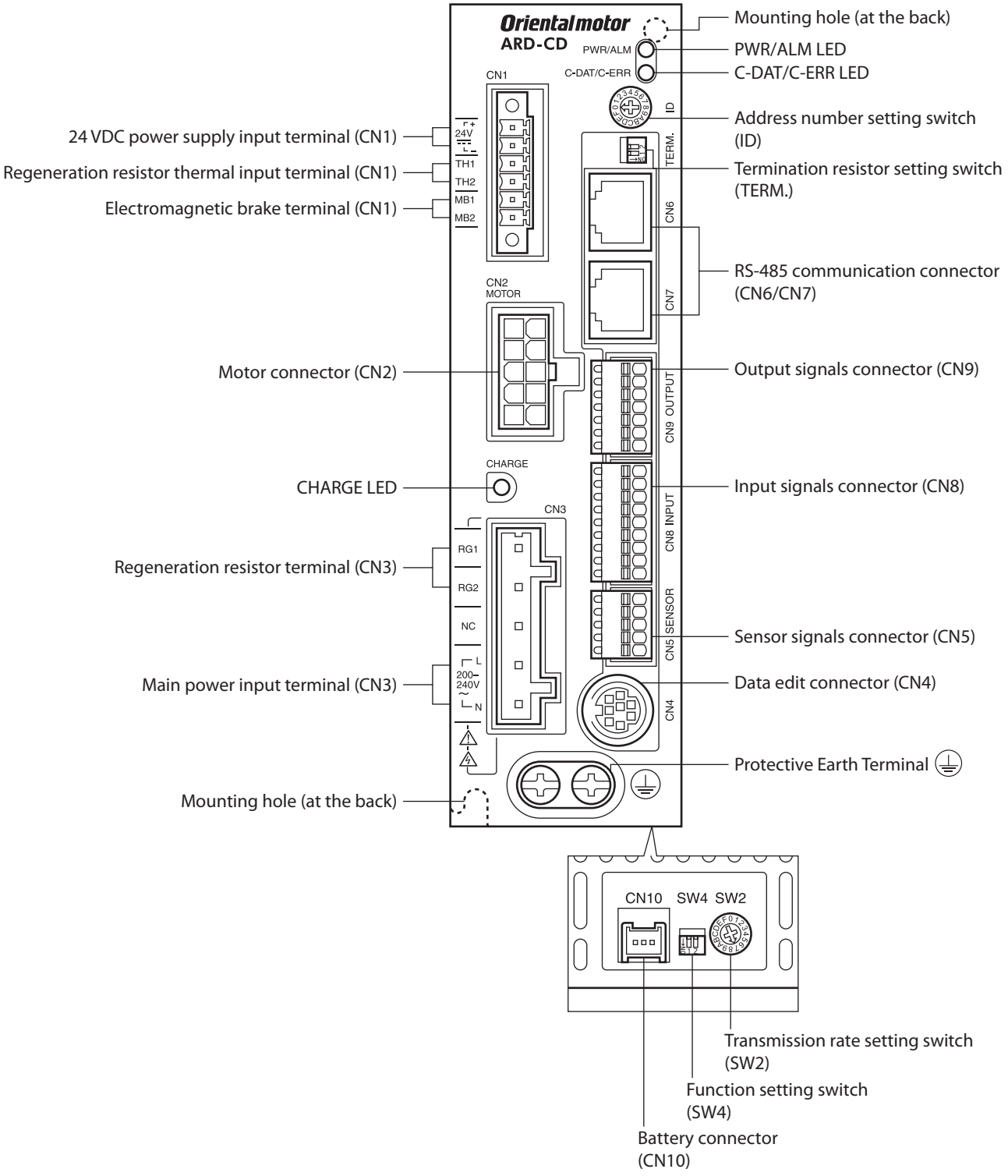

Name	Description	Page
PWR/ALM LED	• PWR (Green): This LED is lit while the 24 VDC power is input. • ALM (Red): This LED will blink when an alarm generates. It is possible to check the generated alarm by counting the number of times the LED blinks.	p.145
C-DAT/C-ERR LED	• C-DAT (Green): This LED will blink or illuminate steadily when the driver is communicating with the master controller properly via RS-485 communication. • C-ERR (Red): This LED will illuminate when a RS-485 communication error occurs with he master controller.	–
Address number setting switch (ID)	Use this switch when controlling the system via RS-485 communication. Use this switch and SW4-No.1 of the function setting switch, to set the address number of RS-485 communication. Factory setting: 0	p.214 p.260 p.261
Termination resistor setting switch (TERM.)	Use this switch when controlling the system via RS-485 communication. Sets the termination resistor (120 Ω) of RS-485 communication. Factory setting: OFF	
RS-485 communication connector (CN6/CN7)	Connects the RS-485 communication cable.	p.47
Output signals connector (CN9)	Connects the output signals.	p.44
Input signals connector (CN8)	Connects the input signals.	
Sensor signals connector (CN5)	Connects the sensor signals.	
Data edit connector (CN4)	Connects a PC in which the **MEXE02** has been installed, or the **OPX-2A**.	p.47
Protective Earth Terminal	Used for grounding via a grounding cable of AWG16 to 14 (1.25 to 2.0 mm^2).	p.40
24 VDC power supply input terminal (CN1-24V)	Connects the control power supply of the driver. +: +24 VDC power supply input –: Power supply GND	p.42
Regeneration resistor thermal input terminal (CN1-TH1/TH2)	Connects the accessory regeneration resistor. If no regeneration resistor is connected, short the TH1 and TH2 terminals.	
Electromagnetic brake terminal (CN1-MB1/MB2)	Connects the lead wires from the electromagnetic brake. MB1: Electromagnetic brake – (black) MB2: Electromagnetic brake + (white)	
Motor connector (CN2)	Connects the motor.	
CHARGE LED (Red)	This LED is lit while the main power is input. After the main power was turned off, the LED will turn off once the residual voltage in the driver drops to a safe level.	–
Regeneration resistor terminal (CN3-RG1/RG2)	Connects the accessory regeneration resistor.	p.42
Main power supply input terminal (CN3-L/N)	Connects the main power supply. L: Live N: Neutral	p.41
Mounting hole (2 places at the back)	These mounting holes are used to secure the driver with screws.	p.37
Transmission rate setting switch (SW2)	Use this switch when controlling the system via RS-485 communication. Sets the transmission rate of RS-485 communication. Factory setting: 7	p.213 p.260
Function setting switch (SW4)	Use this switch when controlling the system via RS-485 communication. No.1: Using this switch and the address number setting switch (ID), set the address number of RS-485 communication. Factory setting: OFF No.2: Sets the protocol of RS-485 communication. Factory setting: OFF	
Battery connector (CN10)	Connects the accessory battery.	p.48

3 Installation

This chapter explains how to install a regeneration resistor and a battery in addition to installation locations and installation methods for the motor and driver.

3-1 Location for installation

The motor and driver are designed and manufactured to be incorporated in equipment. Install them in a well-ventilated location that provides easy access for inspection.
The location must also satisfy the following conditions:

- Inside an enclosure that is installed indoors (provide vent holes)
- Operating ambient temperature
  Motor: −10 to +50 °C (+14 to +122 °F) (non-freezing)
  Harmonic geared type: 0 to +40 °C (+32 to +104 °F) (non-freezing)
  Driver: 0 to +55 °C (+32 to +131 °F) (non-freezing)
- Operating ambient humidity 85% or less (non-condensing)
- Area that is free of explosive atmosphere or toxic gas (such as sulfuric gas) or liquid
- Area not exposed to direct sun
- Area free of excessive amount of dust, iron particles or the like
- Area not subject to splashing water (rain, water droplets), oil (oil droplets) or other liquids
- Area free of excessive salt
- Area not subject to continuous vibration or excessive shocks
- Area free of excessive electromagnetic noise (from welders, power machinery, etc.)
- Area free of radioactive materials, magnetic fields or vacuum
- 1000 m (3300 ft.) or lower above sea level

3-2 Installing the motor

The motor can be installed in any direction.
To allow for heat dissipation and prevent vibration, install the motor on a metal surface of sufficient strength.

● **Installation method A**

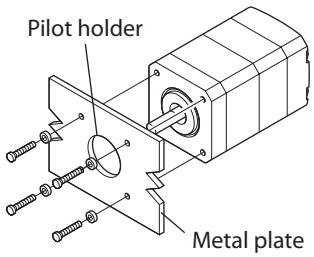

● **Installation method B**

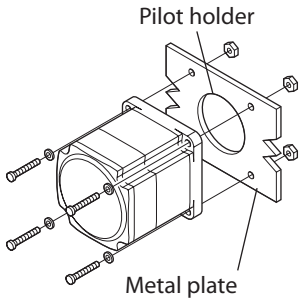

● **Installation method B (FC geared type)**

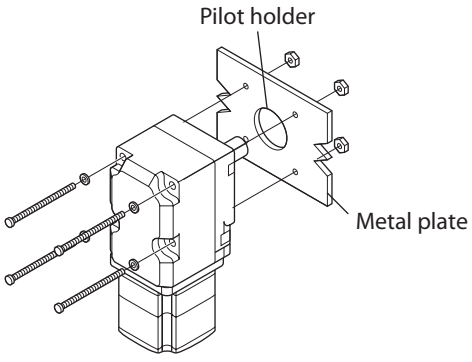

Type	Frame size [mm (in.)]	Bolt size	Tightening torque [N·m (oz-in)]	Effective depth of screw thread [mm (in.)]	Installation method
Standard	42 (1.65)	M3	1 (142)	4.5 (0.177)	A
	60 (2.36)	M4	2 (280)	–	B
	85 (3.35)	M6	3 (420)		
TH geared	42 (1.65) 60 (2.36)	M4	2 (280)	8 (0.315)	A
	90 (3.54)	M8	4 (560)	15 (0.591)	
FC geared	42 (1.65)	M4	2 (280)	–	B
	60 (2.36)	M5	2.5 (350)		
PS geared **PN** geared Harmonic geared *1	42 (1.65)	M4	2 (280)	8 (0.315)	A
	60 (2.36)	M5	2.5 (350)	10 (0.394)	
	90 (3.54)	M8	4 (560)	15 (0.591)	
Harmonic geared *2	90 (3.54)	M8	4 (560)	–	B

*1 **AR46** and **AR66** type only.
*2 **AR98** type only.

3-3 Installing a load

When connecting a load to the motor, align the centers of the motor output shaft and load shaft. Flexible couplings are available as accessories.

Note

- When coupling the load to the motor, pay attention to the centering of the shafts, belt tension, parallelism of the pulleys, and so on. Securely tighten the coupling and pulley set screws.
- Be careful not to damage the output shaft or bearings when installing a coupling or pulley to the motor output shaft.
- Do not modify or machine the motor output shaft. Doing so may damage the bearings (ball bearings) and destroy the motor.
- Do not apply strong force using hammer or other tools when removing the parallel key. Doing so may damage the motor output shaft and bearings (ball bearings).

● Using a coupling

Align the centers of the motor output shaft and load shaft in a straight line.

● Using a belt drive

Align the motor output shaft and load shaft in parallel with each other, and position both pulleys so that the line connecting their centers is at a right angle to the shafts.

● Using a gear drive

Align the motor output shaft and gear shaft in parallel with each other, and let the gears mesh at the center of the tooth widths.

• Using a coupling

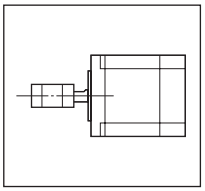

• Using a belt drive

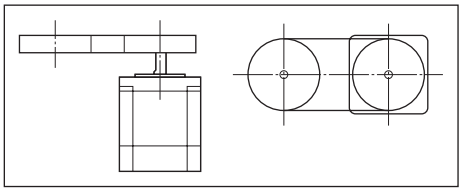

• Using a gear drive

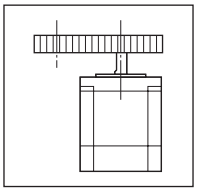

● Using a parallel key (geared motor)

When connecting the load and gear output shaft with a key slot, secure the load using the key supplied with the gear output shaft after machining the key slot on the load.

- **Harmonic geared type; Installing the load on the flange surface**

With a Harmonic geared type (excluding **AR98**), a load can be installed directly to the gear using the load mounting holes provided on the flange surface.

Model	Bolt size	Number of bolts	Tightening torque [N·m (oz-in)]	Effective depth of screw thread [mm (in.)]
AR46	M3	6	1.4 (198)	5 (0.197)
AR66	M4	6	2.5 (350)	6 (0.236)

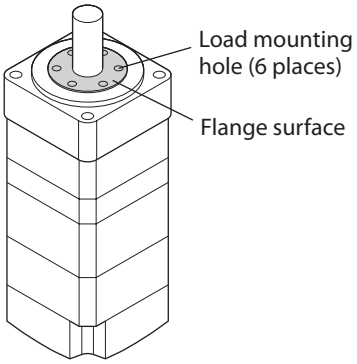

memo
- When installing a load on the flange surface, the load cannot be mounted using the key slot in the output shaft.
- Design an appropriate installation layout so that the load will not contact the metal plate or bolts used for installing the motor.

3-4 Permissible radial load and permissible axial load

Note
- If the radial load or axial load exceeds the specified allowable value, repeated load applications may cause the bearing (ball bearings) or output shaft of the motor to undergo a fatigue failure.
- With a double shaft type, do not apply load torque, radial load or axial load to the output shaft on the opposite side of the motor output shaft.

memo
The permissible radial load and permissible axial load of the **PS** geared type and **PN** geared type represent the value that the service life of the gear part satisfies 20,000 hours when either of the radial load or axial load is applied to the gear output shaft.

Type	Model	Gear ratio	Permissible radial load [N (lb.)]					Permissible axial load [N (lb.)]
			Distance from the tip of motor output shaft [mm (in.)]					
			0 (0)	5 (0.2)	10 (0.39)	15 (0.59)	20 (0.79)	
Standard	**AR46**	–	35 (7.8)	44 (9.9)	58 (13)	85 (19.1)	–	15 (3.3)
	AR66 **AR69**		90 (20)	100 (22)	130 (29)	180 (40)	270 (60)	30 (6.7)
	AR98 **AR911**		260 (58)	290 (65)	340 (76)	390 (87)	480 (108)	60 (13.5)
TH geared	**AR46**	All gear ratio	10 (2.2)	14 (3.1)	20 (4.5)	30 (6.7)	–	15 (3.3)
	AR66		70 (15.7)	80 (18)	100 (22)	120 (27)	150 (33)	40 (9)
	AR98		220 (49)	250 (56)	300 (67)	350 (78)	400 (90)	100 (22)
FC geared	**AR46**	All gear ratio	180 (40)	200 (45)	220 (49)	250 (56)	–	100 (22)
	AR66		270 (60)	290 (65)	310 (69)	330 (74)	350 (78)	200 (45)
PS geared	**AR46**	5	70 (15.7)	80 (18)	95 (21)	120 (27)	–	100 (22)
		7.2	80 (18)	90 (20)	110 (24)	140 (31)	–	
		10	85 (19.1)	100 (22)	120 (27)	150 (33)	–	
		25	120 (27)	140 (31)	170 (38)	210 (47)	–	
		36	130 (29)	160 (36)	190 (42)	240 (54)	–	
		50	150 (33)	170 (38)	210 (47)	260 (58)	–	

Type	Model	Gear ratio	Permissible radial load [N (lb.)]					Permissible axial load [N (lb.)]
			Distance from the tip of motor output shaft [mm (in.)]					
			0 (0)	5 (0.2)	10 (0.39)	15 (0.59)	20 (0.79)	
PS geared	**AR66**	5	170 (38)	200 (45)	230 (51)	270 (60)	320 (72)	200 (45)
		7.2	200 (45)	220 (49)	260 (58)	310 (69)	370 (83)	
		10	220 (49)	250 (56)	290 (65)	350 (78)	410 (92)	
		25	300 (67)	340 (76)	400 (90)	470 (105)	560 (126)	
		36	340 (76)	380 (85)	450 (101)	530 (119)	630 (141)	
		50	380 (85)	430 (96)	500 (112)	600 (135)	700 (157)	
	AR98	5	380 (85)	420 (94)	470 (105)	540 (121)	630 (141)	600 (135)
		7.2	430 (96)	470 (105)	530 (119)	610 (137)	710 (159)	
		10	480 (108)	530 (119)	590 (132)	680 (153)	790 (177)	
		25	650 (146)	720 (162)	810 (182)	920 (200)	1070 (240)	
		36	730 (164)	810 (182)	910 (200)	1040 (230)	1210 (270)	
		50	820 (184)	910 (200)	1020 (220)	1160 (260)	1350 (300)	
PN geared	**AR46**	5	80 (18)	95 (21)	120 (27)	160 (36)	–	100 (22)
		7.2	90 (20)	110 (24)	130 (29)	180 (40)	–	
		10	100 (22)	120 (27)	150 (33)	200 (45)	–	
	AR66	5	240 (54)	260 (58)	280 (63)	300 (67)	330 (74)	200 (45)
		7.2	270 (60)	290 (65)	310 (69)	340 (76)	370 (83)	
		10	300 (67)	320 (72)	350 (78)	380 (85)	410 (92)	
		25	410 (92)	440 (99)	470 (105)	520 (117)	560 (126)	
		36	360 (81)	410 (92)	480 (108)	570 (128)	640 (144)	
		50	360 (81)	410 (92)	480 (108)	570 (128)	700 (157)	
	AR98	5	370 (83)	390 (87)	410 (92)	430 (96)	460 (103)	600 (135)
		7.2	410 (92)	440 (99)	460 (103)	490 (110)	520 (117)	
		10	460 (103)	490 (110)	520 (117)	550 (123)	580 (130)	
		25	630 (141)	660 (148)	700 (157)	740 (166)	790 (177)	
		36	710 (159)	750 (168)	790 (177)	840 (189)	900 (200)	
		50	790 (177)	840 (189)	890 (200)	940 (210)	1000 (220)	
Harmonic geared	**AR46**	All gear ratio	180 (40)	220 (49)	270 (60)	360 (81)	510 (114)	220 (49)
	AR66		320 (72)	370 (83)	440 (99)	550 (123)	720 (162)	450 (101)
	AR98		1090 (240)	1150 (250)	1230 (270)	1310 (290)	1410 (310)	1300 (290)

■ Permissible moment load of the Harmonic geared type

If an eccentric load is applied on the flange surface when installing an arm or a table, do not exceed the permissible value shown in the table.

Model	Permissible moment load [N·m (oz-in)]
AR46	5.6 (790)
AR66	11.6 (1640)

Use the calculating formula below for the moment load.

- **Example 1; When an external force F is applied on the position of distance L from the center of the output flange**

L: Distance from the center of the output flange [m (in.)]
F: External force [N (oz)]

Moment load: M [N·m (oz-in)] = F × L

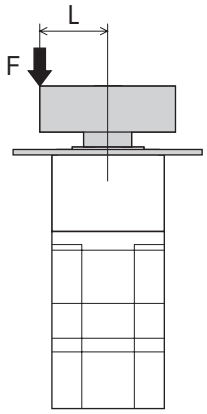

- **Example 2; When external forces F is applied on the position of distance L from the mounting face of the output flange**

L: Distance from the mounting face of the output flange [m (in.)]
F: External force [N (oz)]

Moment load: M [N·m (oz-in)] = F × (L + coefficient "a")

Model	coefficient "a"
AR46	0.009
AR66	0.0114

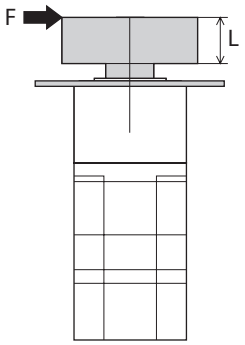

3-5 Installing the driver

The driver is designed so that heat is dissipated via air convection and conduction through the enclosure. Install the driver on a flat metal plate [material: aluminium, 200×200×2 mm (7.87×7.87×0.08 in.) equivalent] having excellent heat conductivity. When two or more drivers are to be installed side by side, provide 20 mm (0.79 in.) and 25 mm (0.98 in.) clearances in the horizontal and vertical directions, respectively.
When installing the driver in an enclosure, use two screws (M4, not supplied) to secure the driver through the mounting holes.

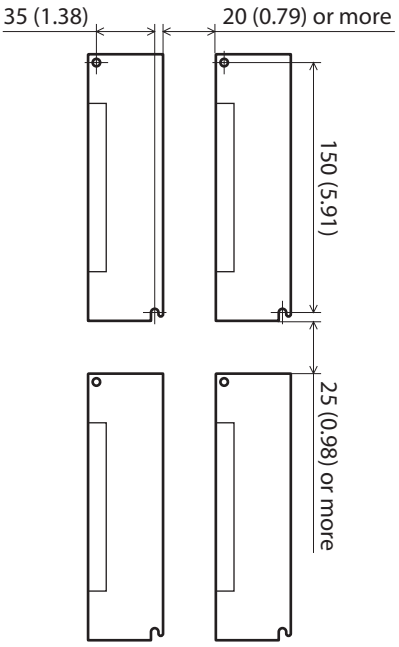

memo

- Install the driver in an enclosure whose pollution degree is 2 or better environment, or whose degree of protection is IP54 minimum.
- Do not install any equipment that generates a large amount of heat or noise near the driver.
- Do not install the driver underneath the controller or other equipment vulnerable to heat.
- Check ventilation if the ambient temperature of the driver exceeds 55 °C (131 °F).
- Be sure to install the driver vertically (vertical position).

Unit: mm (in.)

Dimension [unit: mm (in.)]

Mass: 0.75 kg (1.65 lb.)

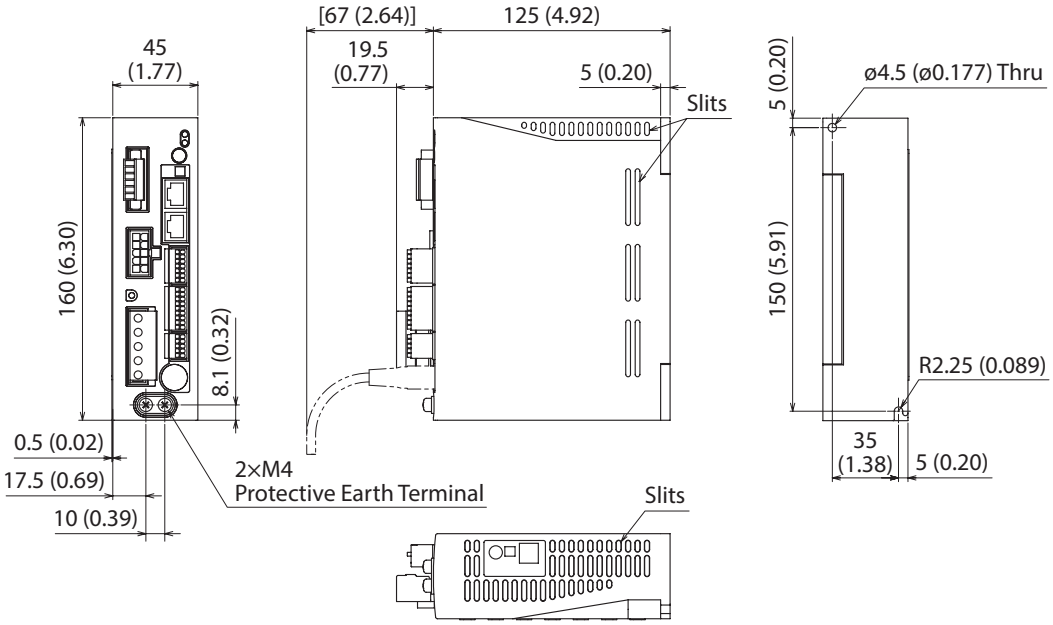

3-6 Installing the regeneration resistor

Install the accessory regeneration resistor in a location where heat dissipation capacity equivalent to a level achieved with a heat sink [made of aluminum, 350×350×3 mm (13.78×13.78×0.12 in.)] is ensured.
Affix the regeneration resistor on a smooth metal plate offering high heat conductivity, using two screws (M4, not supplied). Refer to p.53 for accessory.

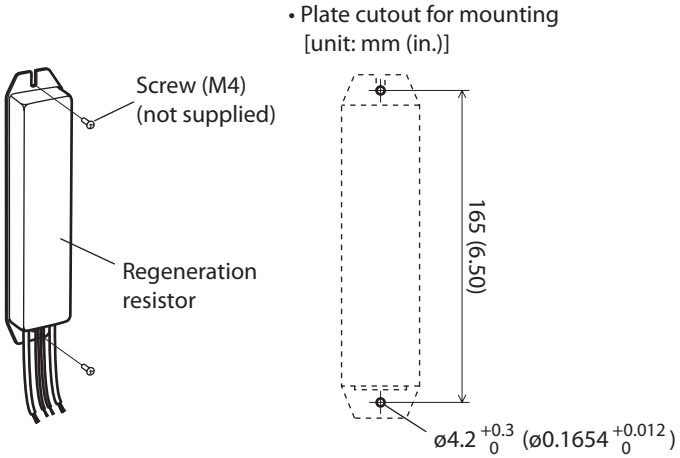

3-7 Installing the battery

A battery and battery holder are included in an accessory battery set **BAT01B**. Use the battery holder to secure the battery. Refer to p.54 for accessory.

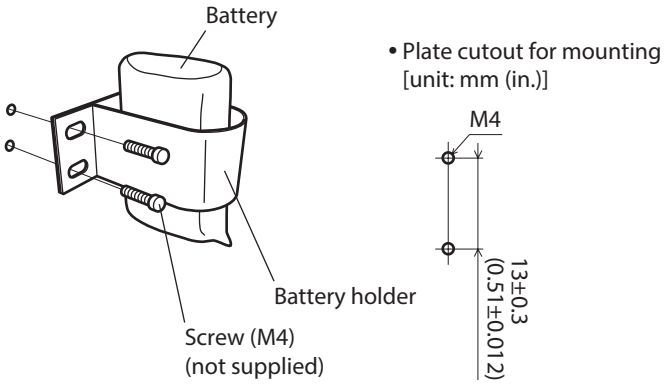

4 Connection

This chapter explains how to connect the motor, I/O signals and power supply to the driver, as well as grounding method. The installation and wiring methods in compliance with the EMC Directive as well as protection against noise are also explained.

⚠Warning

- For protection against electric shock, do not turn on the power supply until the wiring is completed.
- A high voltage is applied to the motor connector (CN2) and the main power supply input terminal (CN3). Do not touch these terminals while the power is on. Doing so may result in fire or electric shock.

4-1 Connection example

The following figure shows models for the electromagnetic brake type and single-phase 200-240 VAC input.

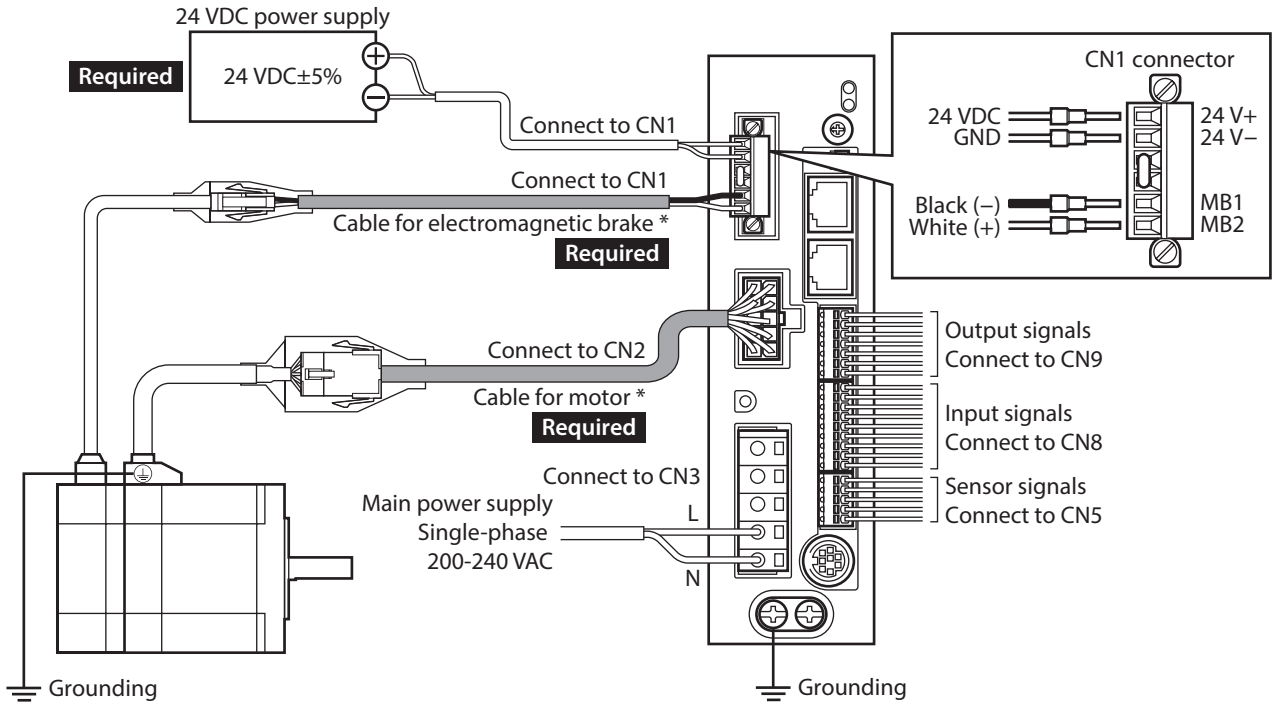

* Cables represented in gray color are supplied with the product or sold separately.
Keep 30 m (98.4 ft.) or less for the wiring distance between the motor and driver.

Note

- Have the connector plugged in securely. Insecure connector connection may cause malfunction or damage to the motor or driver.
- When cycling the power or plugging/unplugging the connector, turn off the power and wait for the CHARGE LED to turn off. The residual voltage may cause electric shock.
- Do not wire the power supply cable of the driver in the same cable duct with other power lines or motor cables. Doing so may cause malfunction due to noise.
- The lead wires of the "cable for electromagnetic brake" have polarities, so connect them in the correct polarities. If the lead wires are connected with their polarities reversed, the electromagnetic brake will not operate properly.

memo

- When unplugging the connector, do so while pressing the latches on the connector.
- If the distance between the motor and driver is extended to 20 m (65.6 ft.) or longer, use a power supply of 24 VDC±4%.
- When installing the motor to a moving part, use an accessory flexible cable having excellent flex resistance. Refer to p.51 for details.

- **Cable size and tightening torque**

Connector	Terminal symbol	Recommended cable size	Screw size	Tightening torque [N·m (oz-in)]
CN1	24V+, 24V–	Stranded wire AWG28 to 16 (0.08 to 1.25 mm^2)	M2	0.22 to 0.25 (31 to 35)
	TH1, TH2	Stranded wire AWG22 (0.3 mm^2)		
	MB1, MB2	Stranded wire AWG20 (0.5 mm^2)		
CN3	RG1, RG2	Stranded wire AWG18 (0.75 mm^2)	–	–
	L, N	Stranded wire AWG16 to 14 (1.25 to 2.0 mm^2)		
CN5	–	Stranded wire AWG26 to 20 (0.14 to 0.5 mm^2)	–	–
CN8	–	Stranded wire AWG26 to 20 (0.14 to 0.5 mm^2)	–	–
CN9	–	Stranded wire AWG26 to 20 (0.14 to 0.5 mm^2)	–	–

- **Current capacity of the 24 VDC power supply**

Model	Current capacity
AR46	0.33 A or more
AR66 **AR69** **AR98**	0.5 A or more

4-2 Grounding the motor and driver

■ Grounding the motor

Be sure to ground the Protective Earth Terminal of the motor.
- Grounding wire: AWG18 (0.75 mm^2) or more
- Screw size: M4
- Tightening torque: 1.2 N·m (170 oz-in)

Use a round, terminal in combination with an inner-clip washer and bolt it in place to secure the grounding connection. Ground wires and crimp terminals are not supplied.

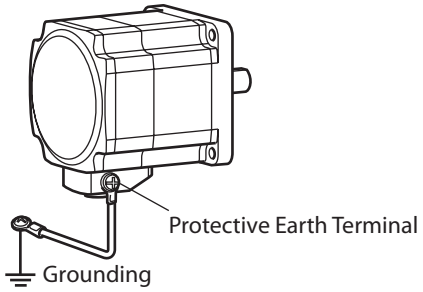

■ Grounding the driver

Be sure to ground the Protective Earth Terminal of the driver.
- Grounding wire: AWG16 to 14 (1.25 to 2.0 mm^2)
- Screw size: M4
- Tightening torque: 1.2 N·m (170 oz-in)

You can ground either of the two Protective Earth Terminals. The terminal not grounded should be connected to the protective earth lead of the motor cable.
Use a grounding wire, and do not share the Protective Earth Terminal with a welder or any other power equipment.
When grounding the Protective Earth Terminal, use a round terminal and secure the grounding point near the driver.

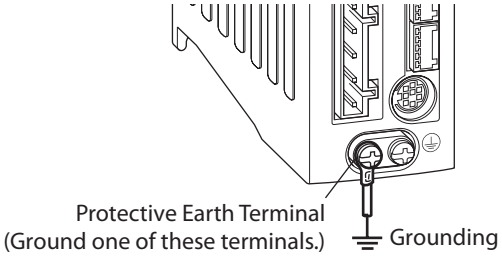

4-3 Connecting the main power supply

Use the CN3 connector (5 pins) to connect the power supply cable (AWG16 to 14: 1.25 to 2.0 mm^2) to the main power supply connector (CN3) on the driver.

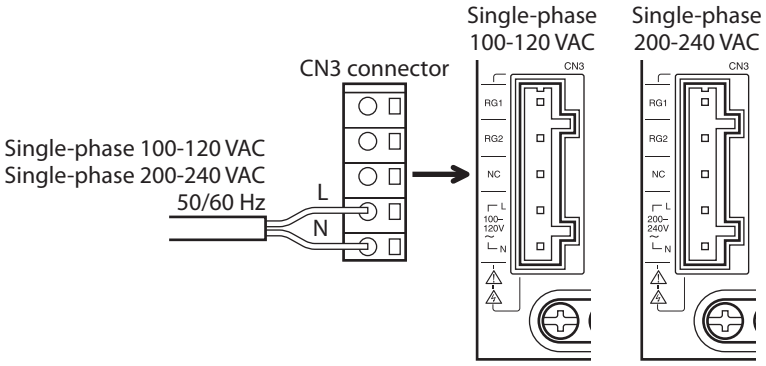

Note

- Do not wire the power supply cable of the driver in the same cable duct with other power lines or motor cables. Doing so may cause malfunction due to noise.
- When cycling the power or plugging/unplugging the connector, turn off the power and wait for the CHARGE LED to turn off. The residual voltage may cause electric shock.

■ Wiring method

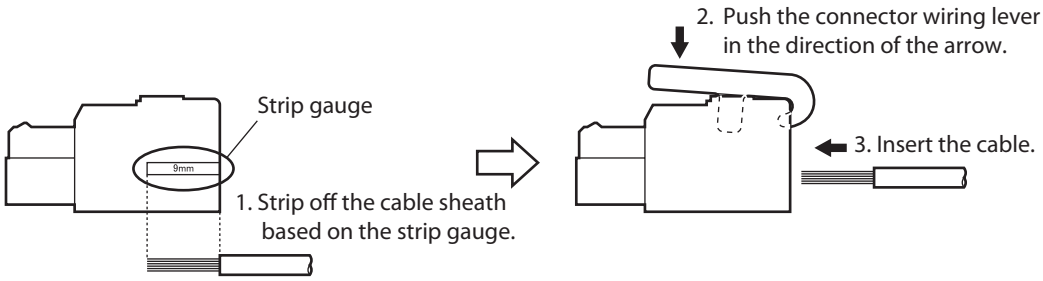

Cable size capacity: AWG16 to 14 (1.25 to 2.0 mm^2)
Strip length of the insulation cover: 8 to 9 mm (0.32 to 0.35 in.)

You can also connect the power supply cable using a flat-tip screwdriver.

Insert a flat-tip screwdriver with a tip of 3.0 to 3.5 mm (0.12 to 0.14 in.) in width into the insertion port and push. In this condition, insert the cable.

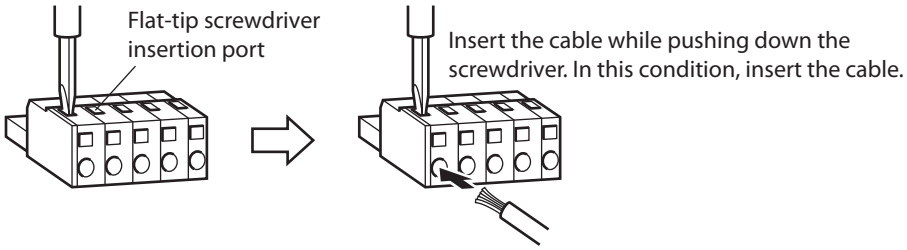

■ Power supply current capacity

Model	Single-phase 100-120 V −15 to +6% 50/60 Hz	Single-phase 200-240 V −15 to +6% 50/60 Hz
AR46	2.4 A or more	1.5 A or more
AR66	3.6 A or more	2.3 A or more
AR69	4.9 A or more	3.0 A or more
AR98	4.6 A or more	2.9 A or more
AR911	5.9 A or more	3.7 A or more

4-4 Connecting the 24 VDC power supply, regeneration resistor and electromagnetic brake

Use the CN1 connector (6 pins) to connect the 24 VDC power supply, regeneration resistor and electromagnetic brake. Connect the lead wire (AWG28 to 16: 0.08 to 1.25 mm^2) to the connector while checking the pin numbers in below.

Display	Description
24V+	24 VDC power supply input
24V–	
TH1	Regeneration resistor thermal input (If these pins are not used, short it using a jumper wire.)
TH2	
MB1	Electromagnetic brake – (Connect the black lead wire of the electromagnetic brake.)
MB2	Electromagnetic brake + (Connect the white lead wire of the electromagnetic brake.)

■ Connecting method

1. Strip the insulation cover of the lead wire by 7 mm (0.28 in.)
2. Insert each lead wire into the CN1 connector and tighten the screw with a flat-tip screwdriver.
   Connector screw size: M2
   Tightening torque: 0.22 to 0.25 N·m (31 to 35 oz-in)
3. Insert the CN1 connector into the CN1, and tighten the screw.
   Connector screw size: M2.5
   Tightening torque: 0.4 N·m (56 oz-in)

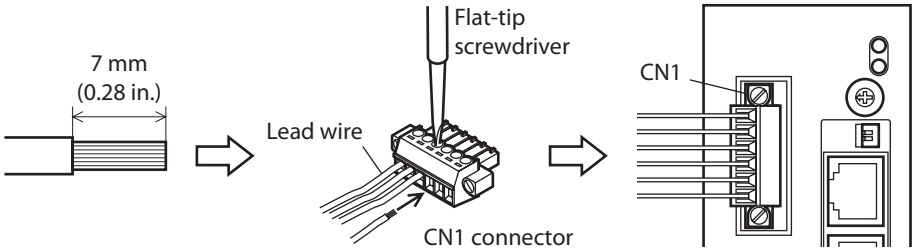

■ Connecting the 24 VDC power supply

The 24 VDC power supply is for the control circuit of the driver. Use the 24 VDC±5% power supply of the following capacity.

Model	Without electromagnetic brake	With electromagnetic brake
AR46	0.25 A or more	0.33 A or more
AR66, **AR69**, **AR98**		0.5 A or more
AR911		–

memo

- If the distance between the motor and driver is extended to 20 m (65.6 ft.) or longer, use a power supply of 24±4% VDC.
- When cycling the 24 VDC power supply, turn off the power and wait for at least 1 second before turning on.

■ Connecting the regeneration resistor

Connect the accessory regeneration resistor if vertical drive (gravitational operation) such as elevator applications is performed or if sudden start-stop operation of a large inertial load is repeated frequently.

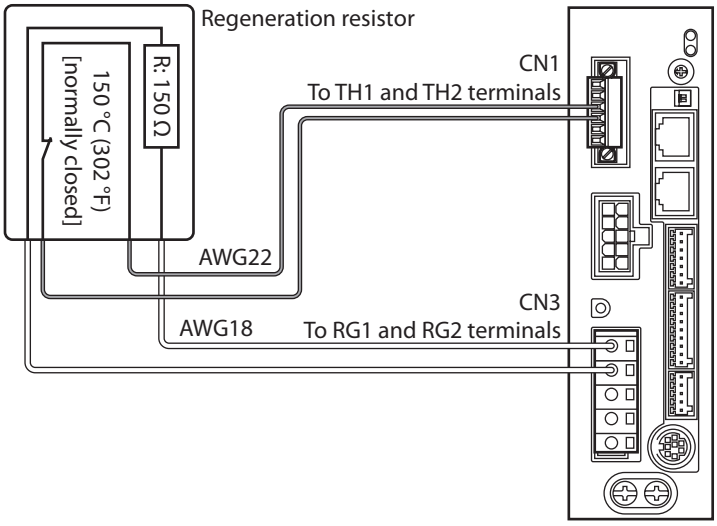

- The two thin lead wires (AWG22: 0.3 mm^2) of the regeneration resistor are the thermostat outputs. Connect them to the TH1 and TH2 terminals using the CN1 connector.
- Regenerative current flows through the two thick lead wires (AWG18: 0.75 mm^2) of the regeneration resistor. Connect them to the RG1 and RG2 terminals using the CN3 connector.

memo

- Before connecting the regeneration resistor, be sure to remove the jumper wire from the CN1 connector.
- If the current consumption of the regeneration resistor exceeds the allowable level, the thermostat will be triggered and a regeneration resistor overheat alarm will generate. If a regeneration resistor overheat alarm generates, turn off the power and check the content of the error.

Regeneration resistor specifications

Model	**RGB100**
Allowable current consumption	Continuous regenerative power: 50 W * Instantaneous regenerative power: 600 W
Resistance	150 Ω
Operating temperature of thermostat	Operation: Opens at 150±7 °C (302±12.6 °F) Reset: Closes at 145±12 °C (293±21.6 °F) (normally closed)
Electrical rating of thermostat	120 VAC 4 A, 30 VDC 4 A (minimum current: 5 mA)

* Install the regeneration resistor in a location where heat dissipation capacity equivalent to a level achieved with a heat sink [made of aluminum, 350×350×3 mm (13.78×13.78×0.12 in.)] is ensured.

■ Connecting the electromagnetic brake

When the electromagnetic brake is connected, it can automatically be controlled by interlocking with the C-ON input or the FREE input. Refer to p.39 for connection method.

4-5 Connecting the I/O signals

■ Wiring method

- Applicable lead wire: AWG26 to 20 (0.14 to 0.5 mm^2)
- Strip length of the insulation cover: 8 mm (0.32 in.)

1. Strip the insulation cover of the lead wire.
2. Insert the lead wire while pushing the button of the orange color on the connector with a flat-tip screwdriver.
3. After having inserted, release the button to secure the lead wire.

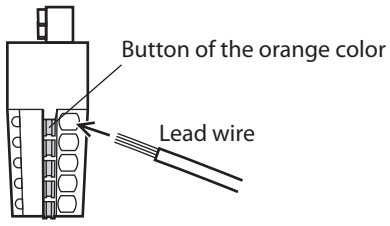

■ Pin assignment

● Sensor signals (CN5)

Pin No.	Signal name	Description
1	+LS	Limit sensor input +
2	–LS	Limit sensor input –
3	HOMES	Mechanical home sensor input
4	SLIT	Slit sensor input
5	IN-COM2	Sensor common input

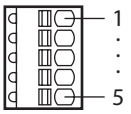

● Input signals (CN8)

Pin No.	Signal name	Description *
1	IN0	Control input 0 (HOME)
2	IN1	Control input 1 (START)
3	IN2	Control input 2 (M0)
4	IN3	Control input 3 (M1)
5	IN4	Control input 4 (M2)
6	IN5	Control input 5 (FREE)
7	IN6	Control input 6 (STOP)
8	IN7	Control input 7 (ALM-RST)
9	IN-COM1	Input signal common

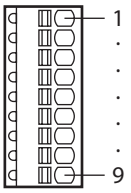

* ( ): Initial value

● Output signals (CN9)

Pin No.	Signal name	Description *
1	OUT0	Control output 0 (HOME-P)
2	OUT1	Control output 1 (END)
3	OUT2	Control output 2 (AREA1)
4	OUT3	Control output 3 (READY)
5	OUT4	Control output 4 (WNG)
6	OUT5	Control output 5 (ALM)
7	OUT-COM	Output signal common

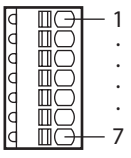

* ( ): Initial value

■ Connection example with a current sink output circuit (NPN specifications)

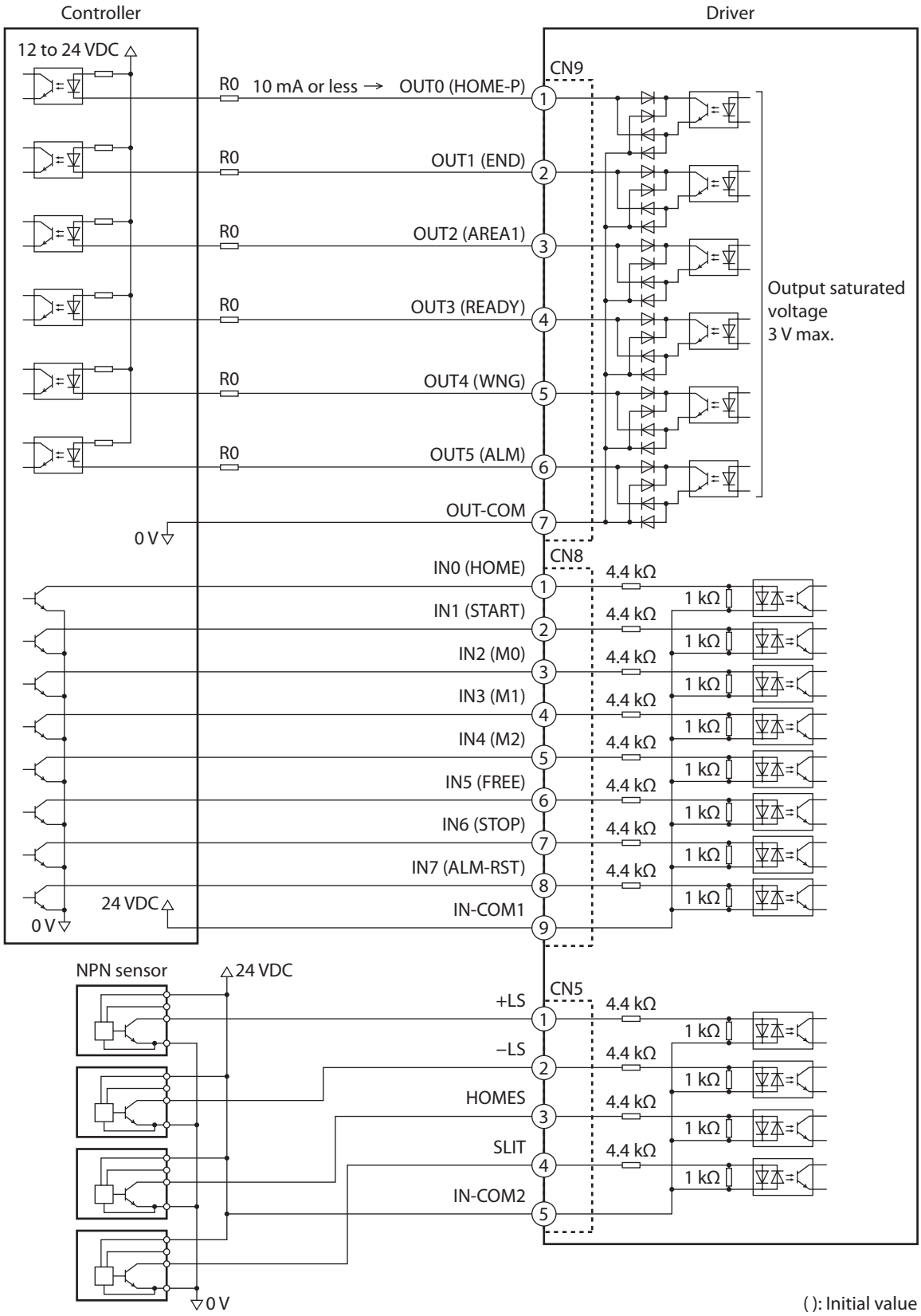

( ): Initial value

memo

- Use input signals at 24 VDC.
- Use output signals at 12 to 24 VDC 10 mA or less. If the current exceeds 10 mA, connect an external resistor R0 so that the current becomes 10 mA or less.
- The saturated voltage of the output signal is 3 VDC maximum.

■ Connection example with a current source output circuit (PNP specifications)

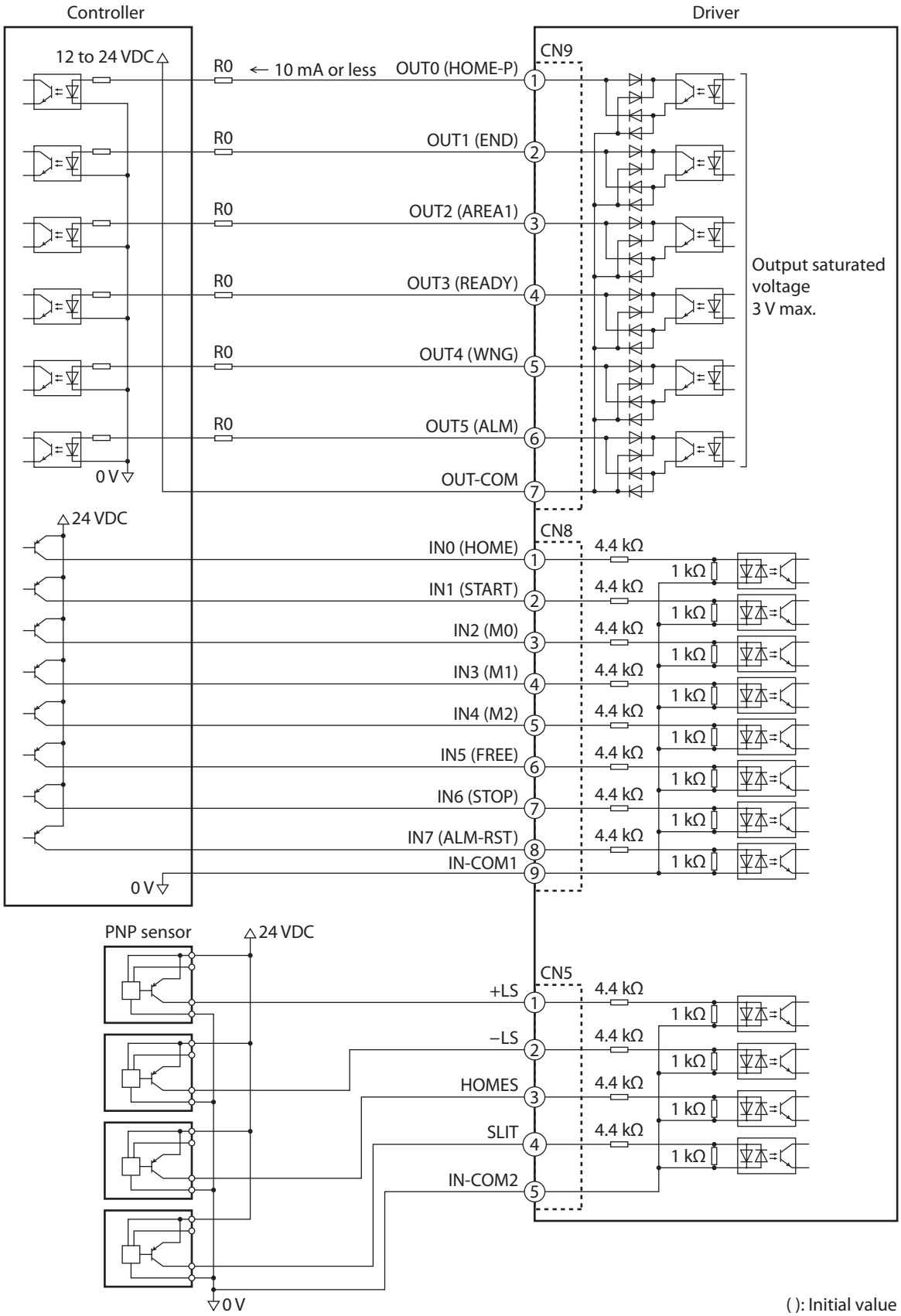

( ): Initial value

memo

- Use input signals at 24 VDC.
- Use output signals at 12 to 24 VDC 10 mA or less. If the current exceeds 10 mA, connect an external resistor R0 so that the current becomes 10 mA or less.
- The saturated voltage of the output signal is 3 VDC maximum.

4-6 Connecting the data setter

Connect the communication cable for the support software or **OPX-2A** cable to the data edit connector (CN4) on the driver.

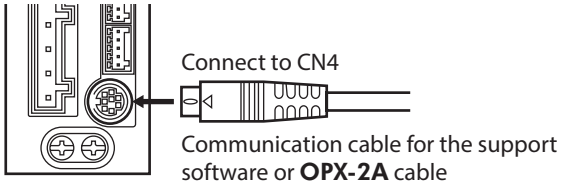

⚠Caution The data edit connector (CN4) and RS-485 communication connector (CN6/CN7) of the driver are not electrically insulated. When grounding the positive terminal of the power supply, do not connect any equipment (PC, etc.) whose negative terminal is grounded. Doing so may cause the driver and these equipment to short, damaging both.

4-7 Connecting the RS-485 communication cable

Connect this cable if you want to control your product via RS-485 communication. Connect the RS-485 communication cable to CN6 or CN7 on the driver.
You can use the vacant connectors to connect a different driver. A driver link cable is available as an accessory. See p.53.
You can also use a commercial LAN cable (straight cable) to link drivers.

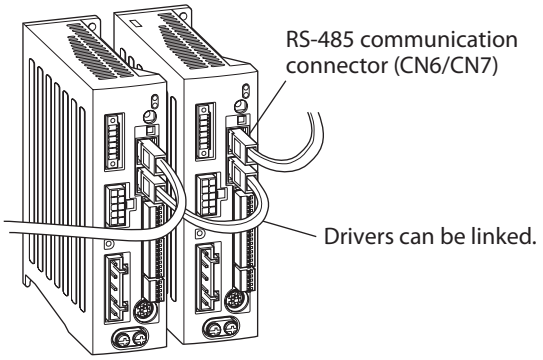

• Internal input circuit

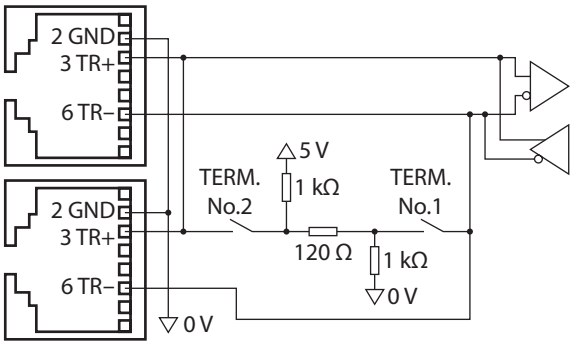

CN6/CN7 pin assignment

Pin No.	Signal name	Description
1	N.C.	Not used.
2	GND	GND
3	TR+	RS-485 communication signal (+)
4	N.C.	Not used.
5	N.C.	
6	TR–	RS-485 communication signal (–)
7	N.C.	Not used.
8	N.C.	

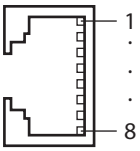

4-8 Connecting and charging the battery

Connect an accessory battery for the absolute-position backup system. When the battery is connected to the battery connector (CN10) of the driver and the 24 VDC power is turned on, the battery will start charging. It takes approximately 32 hours to fully charge the battery [at an ambient temperature of 20 °C (68 °F)]. Refer p.54 for accessory.
Refer to p.166 for setting method of the absolute-position backup system.

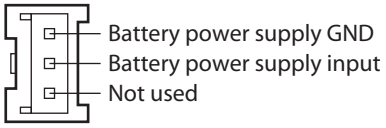

Battery specifications

Battery type	Sealed nickel-metal hydride battery
Nominal voltage	2.4 V
Rated capacity	1900 mAh
Mass	0.10 kg (3.5 oz)
Expected life	Approximately 4 years *1
Charging time	32 hours *1
Data retention period	Approximately 360 hours (Approximately 15 days) *1 *2
Ambient temperature	0 to +40 °C (+32 to +104 °F) (non-freezing)
Ambient humidity	45 to 85% (non-condensing)

*1 At an ambient temperature of 20 °C (68 °F)

*2 After the power is cut off with the battery fully charged.

4-9 Noise measures

The electrical noise is of two types: One is a noise to invade into the driver from the outside and cause the driver malfunction, and the other is a noise to emit from the driver and cause peripheral equipments malfunction.
For the noise that is invaded from the outside, take measures to prevent the driver malfunction. It is needed to take adequate measures because signal lines are very likely to be affected by the noise.
For the noise that is emitted from the driver, take measures to suppress it.

■ Measures against electrical noise

There are the following three methods mainly to take measures against the electrical noise.

- **Noise suppression**
  - When relays or electromagnetic switches are used together with the system, use noise filters and CR circuits to suppress surges generated by them.
  - Use an accessory cable when extending a wiring distance between the motor and driver.
  - Cover the driver by a metal plate such as aluminum. This is effective in shielding the electrical noise emitted from the driver.
- **Prevention of noise propagation**
  - Connect a noise filter in the power supply cable of driver.
  - Place the power lines, such as the motor and power supply cables, keeping a distance of 200 mm (7.87 in.) or more from the signal lines, and also do not bundle them or wire them in parallel. If the power cables and signal cables have to cross, cross them at a right angle.
  - Use shielded twisted pair cables for power lines and signal lines.
  - Keep cables as short as possible without coiling and bundling extra lengths.
  - When grounding PE terminals of multiple drivers to a grounding point, it becomes more effective to block the electrical noise since impedance on the grounding point is decreased. However, ground them so that a potential difference does not occur among the grounding points. An accessory driver cable including with a ground wire is available. Refer to p.53 for details.
  - To ground a shielded cable, use a metal cable clamp that will maintain contact with the entire circumference of the cable. Ground the cable clamp near the product.

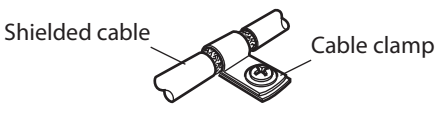

● Suppression of effect by noise propagation

Loop the noise propagated cable around a ferrite core. Doing so will prevent the propagated noise invades into the driver or emits from the driver. The frequency band in which an effect by the ferrite core can be seen is generally 1 MHz or more. Check the frequency characteristics of the ferrite core used. To increase the effect of noise attenuation by the ferrite core, loop the cable a lot.

■ Noise suppression parts

● Noise filter

- Connect the following noise filter (or equivalent) to the power line. Doing so will prevent the propagated noise through the power line. Install the noise filter as close to the driver as possible.

Manufacture	Model
SOSHIN ELECTRIC CO.,LTD	HF2010A-UPF
Schaffner EMC	FN2070-10-06

- Use the AWG18 (0.75 mm^2) or thicker wire for the input and output cables of the noise filter, and secure firmly using a cable clamp etc. so that the cable does not come off the enclosure.
- Place the input cable as far apart as possible from the output cable, and do not wire the cables in parallel. If the input and output cable are placed at a close distance or if they are wired in parallel, the noise in the enclosure affects the power cable through stray capacitance, and the noise suppressing effect will reduce.
- Connect the ground terminal of the noise filter to the grounding point, using as thick and short a wire as possible.
- When connecting a noise filter in an enclosure, wire the input cable of the noise filter as short as possible. Wiring in long distance may reduce the noise suppressing effect.

● Surge arrester

A surge arrester is effective for reduction of the surge voltage of the lightning surge generated between the AC power line and earth or between AC power lines. Connect the following surge arrester.
R·A·V-781BWZ-4 (OKAYA ELECTRIC INDUSTRIES CO., LTD.)

Note When measuring dielectric strength of the equipment, be sure to remove the surge arrester, or the surge arrester may be damaged.

■ Noise suppression parts (accessories)

Refer to p.53 for accessories.

● Driver cable

This cable is a shielded twisted pair cable for good noise immunity to connect the driver and controller. The ground wires useful to grounding are provided at both ends of the cable. The EMC measures are conducted using the Oriental Motor driver cable.

● Surge suppressor

This product is effective to suppress the surge which occurs in a relay contact part. Connect it when using a relay or electromagnetic switch. CR circuit for surge suppression and CR circuit module are provided.

4-10 Installing and wiring in compliance with EMC Directive

Effective measures must be taken against the EMI that the motor and driver may give to adjacent control-system equipment, as well as the EMS of the motor and driver itself, in order to prevent a serious functional impediment in the machinery. The use of the following installation and wiring methods will enable the motor and driver to be compliant with the EMC Directive. Refer to p.324 for the applicable standards.
Oriental Motor conducts EMC measurements on its motors and drivers in accordance with "Example of motor and driver installation and wiring" on p.50.
The user is responsible for ensuring the machine's compliance with the EMC Directive, based on the installation and wiring explained below.

● Connecting noise filter

In large electrically noisy environments, connect a noise filter. Refer to "Noise filter" in the above.

● Connecting surge arrester

Refer to "Surge arrester" in the above.

- **Connecting the AC power line reactor**

  When inputting single-phase 240 V, insert a reactor (5 A, 5 mH) in the AC power line to ensure compliance with EN 61000-3-2.

- **Connecting the 24 VDC power supply**

  Use a 24 VDC power supply that conforms to the EMC Directive.
  Use a shielded twisted pair cable for wiring. Refer to "Prevention of noise propagation" on p.48 for wiring method.

- **Connecting the motor cable**

  Use an accessory motor cable when extending the wiring distance between the motor and driver.

- **Connecting the signal cable**

  Refer to "Prevention of noise propagation" on p.48.

- **How to ground**
  - The cable used to ground the motor, driver and noise filter must be as thick and short as possible so that no potential difference is generated.
  - Choose a large, thick and uniformly conductive surface for the grounding point.
  - Be sure to ground the Protective Earth Terminal of the motor and driver. Refer to p.40 for grounding method.

- **Example of motor and driver installation and wiring**

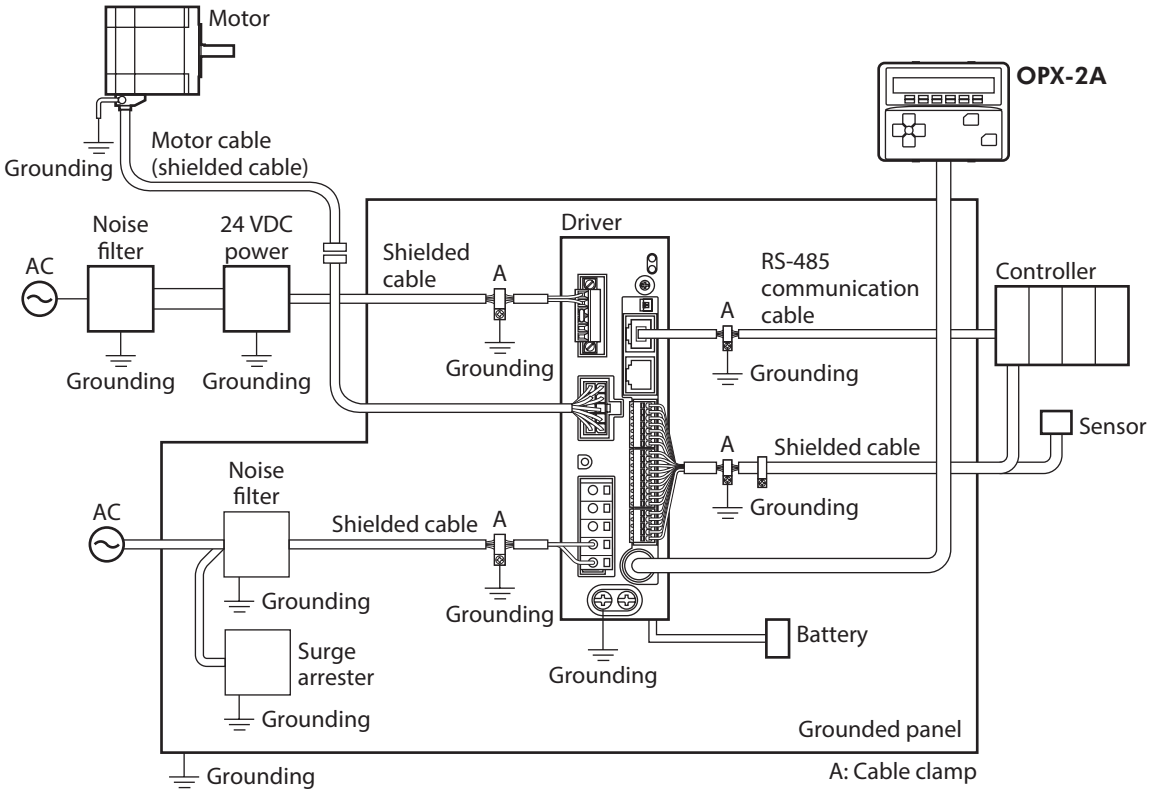

Note The driver uses parts that are sensitive to electrostatic charge. Take measures against static electricity since static electricity may cause the driver to malfunction or suffer damage.

5 Accessories

5-1 Motor cable set

■ Connection cable set

Use when connecting a motor and a driver. The cable set for electromagnetic brake motors consists of two cables, one for motor and the other for electromagnetic brake.

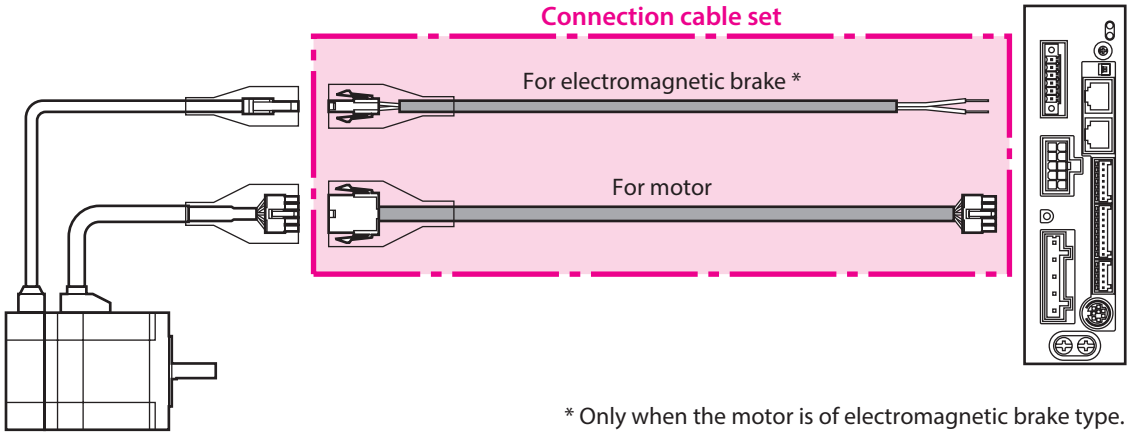

* Only when the motor is of electromagnetic brake type.

memo When installing the motor on a moving part, use a flexible cable having excellent flex resistance.

● **Connection cable set**
For standard type motor

Model	Length [m (ft.)]
CC010VAF	1 (3.3)
CC020VAF	2 (6.6)
CC030VAF	3 (9.8)
CC050VAF	5 (16.4)
CC070VAF	7 (23)
CC100VAF	10 (32.8)
CC150VAF	15 (49.2)
CC200VAF	20 (65.6)
CC300VAF	30 (98.4)

● **Connection cable set**
For electromagnetic brake type motor

Model	Length [m (ft.)]
CC010VAFB	1 (3.3)
CC020VAFB	2 (6.6)
CC030VAFB	3 (9.8)
CC050VAFB	5 (16.4)
CC070VAFB	7 (23)
CC100VAFB	10 (32.8)
CC150VAFB	15 (49.2)
CC200VAFB	20 (65.6)
CC300VAFB	30 (98.4)

● **Flexible connection cable set**
For standard type motor

Model	Length [m (ft.)]
CC010VAR	1 (3.3)
CC020VAR	2 (6.6)
CC030VAR	3 (9.8)
CC050VAR	5 (16.4)
CC070VAR	7 (23)
CC100VAR	10 (32.8)
CC150VAR	15 (49.2)
CC200VAR	20 (65.6)
CC300VAR	30 (98.4)

● **Flexible connection cable set**
For electromagnetic brake type motor

Model	Length [m (ft.)]
CC010VARB	1 (3.3)
CC020VARB	2 (6.6)
CC030VARB	3 (9.8)
CC050VARB	5 (16.4)
CC070VARB	7 (23)
CC100VARB	10 (32.8)
CC150VARB	15 (49.2)
CC200VARB	20 (65.6)
CC300VARB	30 (98.4)

■ Extension cable set

Use when extending the distance between a motor and a driver or when the length of the connection cable used is not enough. Extend the distance by connecting the extension cable to the connection cable.
The cable set for electromagnetic brake motors consists of two cables, one for motor and the other for electromagnetic brake.

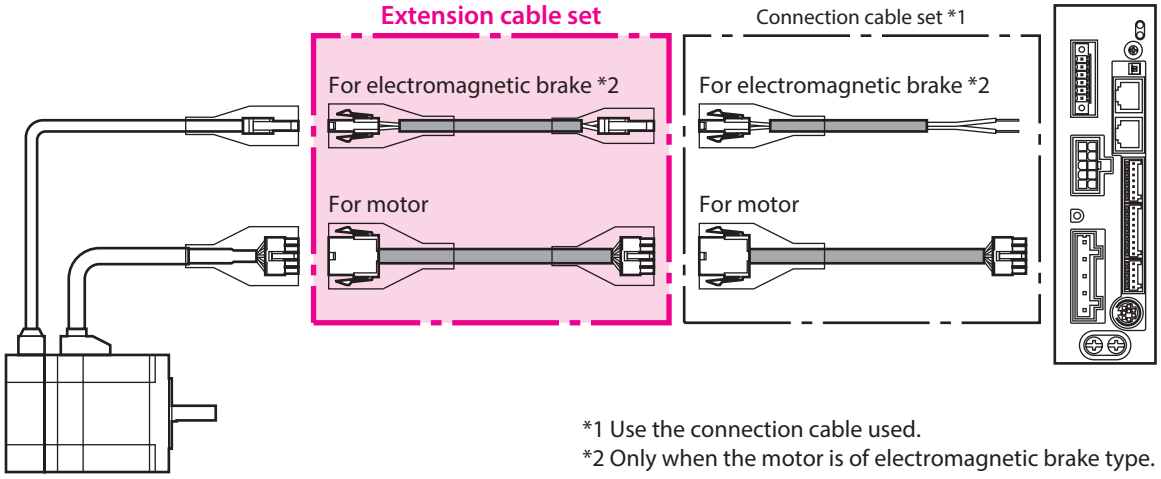

*1 Use the connection cable used.
*2 Only when the motor is of electromagnetic brake type.

memo
- When installing the motor on a moving part, use a flexible cable having excellent flex resistance.
- When extending the wiring length by connecting an extension cable to the connection cable, keep the total cable length to 30 m (98.4 ft.) or less.

● **Extension cable set**
For standard type motor

Model	Length [m (ft.)]
CC010VAFT	1 (3.3)
CC020VAFT	2 (6.6)
CC030VAFT	3 (9.8)
CC050VAFT	5 (16.4)
CC070VAFT	7 (23)
CC100VAFT	10 (32.8)
CC150VAFT	15 (49.2)
CC200VAFT	20 (65.6)

● **Extension cable set**
For electromagnetic brake type motor

Model	Length [m (ft.)]
CC010VAFBT	1 (3.3)
CC020VAFBT	2 (6.6)
CC030VAFBT	3 (9.8)
CC050VAFBT	5 (16.4)
CC070VAFBT	7 (23)
CC100VAFBT	10 (32.8)
CC150VAFBT	15 (49.2)
CC200VAFBT	20 (65.6)

● **Flexible extension cable set**
For standard type motor

Model	Length [m (ft.)]
CC010VART	1 (3.3)
CC020VART	2 (6.6)
CC030VART	3 (9.8)
CC050VART	5 (16.4)
CC070VART	7 (23)
CC100VART	10 (32.8)
CC150VART	15 (49.2)
CC200VART	20 (65.6)

● **Flexible extension cable set**
For electromagnetic brake type motor

Model	Length [m (ft.)]
CC010VARBT	1 (3.3)
CC020VARBT	2 (6.6)
CC030VARBT	3 (9.8)
CC050VARBT	5 (16.4)
CC070VARBT	7 (23)
CC100VARBT	10 (32.8)
CC150VARBT	15 (49.2)
CC200VARBT	20 (65.6)

5-2 Setting tool

■ Communication cable for the support software

Be sure to purchase the communication cable for the support software when connecting a driver and PC in which the support software **MEXE02** has been installed.
This is a set of a PC interface cable and USB cable. The cable is connected to the USB port on the PC.

Model: **CC05IF-USB** [5 m (16.4 ft.)]

The **MEXE02** can be downloaded from Oriental Motor Website Download Page. Also, the **MEXE02** is provided in the form of a storage medium. For details, check out our web site or contact your nearest Oriental Motor sales office.

■ Data setter

The data setter lets you set operation data and parameters for your **AR** Series with ease and also functions as a monitor.

Model: **OPX-2A**

5-3 Wiring support tool

■ RS-485 communication cable

You can link drivers using this cable connected to the RS-485 communication connectors (CN6, CN7).

Model: **CC002-RS4** [0.25 m (1 ft.)]

■ Regeneration resistor

If vertical drive (gravitational operation) such as elevator applications is performed or if sudden start-stop operation of a large inertial load is repeated frequently, connect the regeneration resistor. Always connect the regeneration resistor if an overvoltage protection warning or alarm generates.

Model: **RGB100**

■ Driver cable

A shielded cable for driver control I/O signals offering excellent noise resistance. The ground wires useful to grounding are provided at both ends of the cable.
Select the cable suitable for the number of I/O signals connected.

Driver cable model list

Cable length [m (ft.)]	Number of lead wire			
	6 pcs.	10 pcs.	12 pcs.	16 pcs.
0.5 (1.6)	**CC06D005B-1**	**CC10D005B-1**	**CC12D005B-1**	**CC16D005B-1**
1 (3.3)	**CC06D010B-1**	**CC10D010B-1**	**CC12D010B-1**	**CC16D010B-1**
1.5 (4.9)	**CC06D015B-1**	**CC10D015B-1**	**CC12D015B-1**	**CC16D015B-1**
2 (6.6)	**CC06D020B-1**	**CC10D020B-1**	**CC12D020B-1**	**CC16D020B-1**

■ CR circuit for surge suppression

This product is effective to suppress the serge which occurs in a relay contact part. Use it to protect the contacts of the relay or switch.

Model: **EPCR1201-2**

■ CR circuit module

This product is effective to suppress the surge which occurs in a relay contact part. Use this product to protect the contacts of the relay or switch.
4 pieces of CR circuit for surge suppression are mounted on the compact circuit, and this product can be installed to the DIN rail. This product can make the wiring easily and securely since it also supports terminal block connection.

Model: **VCS02**

5-4 Others

■ Battery set

This is a battery set (including a battery and battery holder) required in the absolute-position backup system.

Model: **BAT01B**

3 DC power input type

This part explains contents specific to the AR Series DC power input type.

◆Table of contents

1 System configuration 56

2 Preparation 57

2-1 Checking the product 57
2-2 How to identify the product model 58
2-3 Information about nameplate 59
2-4 Combinations of motors and drivers 59
2-5 Input/output power ratings 61
2-6 Names and functions of parts 61

3 Installation 64

3-1 Location for installation 64
3-2 Installing the motor 64
3-3 Installing a load 65
3-4 Permissible radial load and permissible axial load 66
3-5 Installing the driver 69
3-6 Installing the battery 70

4 Connection 71

4-1 Connection example 71
4-2 Grounding the motor and driver 72
4-3 Connecting the power supply and electromagnetic brake 73
4-4 Connecting the I/O signals 74
4-5 Connecting the data setter 77
4-6 Connecting the RS-485 communication cable 77
4-7 Connecting and charging the battery 78
4-8 Noise measures 78
4-9 Conformity to the EMC Directive 79

5 Accessories 81

5-1 Motor cable set 81
5-2 Setting tool 83
5-3 Wiring support tool 83
5-4 Others 84

1 System configuration

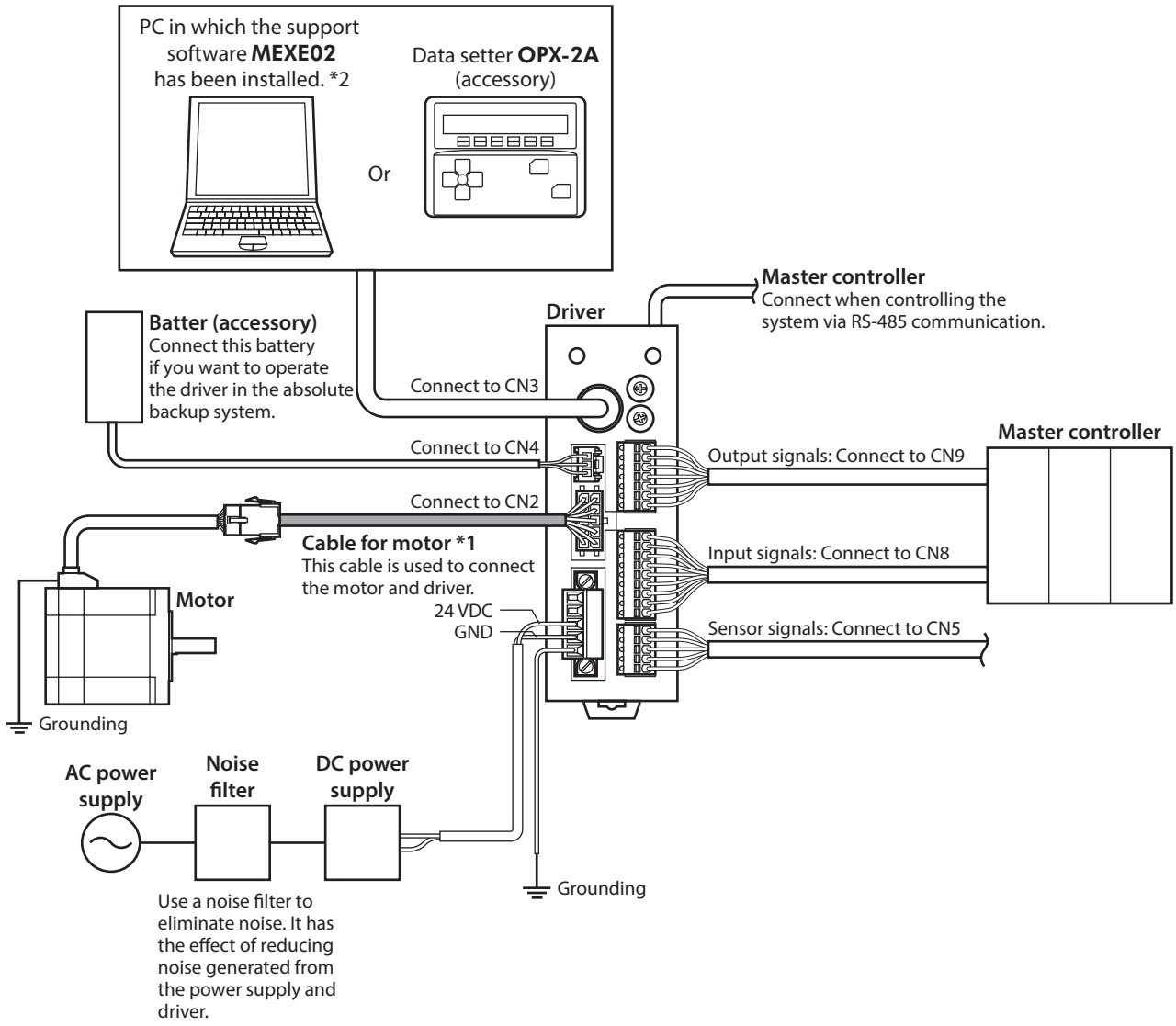

*1 Cables represented in gray color are supplied with the product or sold separately. Use when the cable length is not long enough.

*2 The PC must be supplied by the user. Use the accessory communication cable for the support software when connecting the PC and driver.

2 Preparation

This chapter explains the items you should check, as well as the name and function of each part.

2-1 Checking the product

Verify that the items listed below are included. Report any missing or damaged items to the Oriental Motor sales office from which you purchased the product.
Verify the model number of the purchased unit against the number shown on the package label.
Check the model number of the motor and driver against the number shown on the nameplate. Refer to p.59 for how to identify the nameplate.
The motor and driver package names and corresponding motor/driver combinations are listed on p.59.

- Motor .....1 unit
- Driver .....1 unit
- CN1 connector (5 pins).....1 pc.
- CN5 connector (5 pins).....1 pc.
- CN8 connector (9 pins).....1 pc.
- CN9 connector (7 pins).....1 pc.
- OPERATING MANUAL Motor.....1 copy
- OPERATING MANUAL Driver.....1 copy
- APPENDIX UL Stndards for **AR** Series.....1 copy
- Cable for motor .....1 pc. *1
- Cable for electromagnetic brake .....1 pc. *1 *2
- Parallel key .....1 pc. *3

*1 When the product is supplied with a connection cable.
*2 Supplied with electromagnetic brake type.
*3 Supplied with geared types; except for the **AR24**, **AR46TH** and **AR66TH**.

Supplied connector model

Type	Model number	Manufacturer
CN1 connector	MC1,5/5-STF-3,5	PHOENIX CONTACT GmbH & Co. KG
CN5 connector	FK-MC0,5/5-ST-2,5	PHOENIX CONTACT GmbH & Co. KG
CN8 connector	FK-MC0,5/9-ST-2,5	PHOENIX CONTACT GmbH & Co. KG
CN9 connector	FK-MC0,5/7-ST-2,5	PHOENIX CONTACT GmbH & Co. KG

2-2 How to identify the product model

- **Standard type**

AR 2 4 S A K D -3
1 2 3 4 5 6 7 10

- **Geared type**

AR 4 6 S A K D - PS 10 -3
1 2 3 4 5 6 7 8 9 10

1	Series name	**AR** Series
2	Motor frame size	**1**: 20 mm (0.79 in.) **2**: 28 mm (1.10 in.) [30 mm (1.18 in.) for Harmonic geared type] **4**: 42 mm (1.65 in.) **6**: 60 mm (2.36 in.) **9**: 85 mm (3.35 in.) [90 mm (3.54 in.) for geared type]
3	Motor length	
4	Motor identification	**S**: Without connector cover for cable None: With connector cover for cable
5	Motor type	**A**: Single shaft **B**: Double shaft **M**: With electromagnetic brake
6	Power supply voltage	**K**: 24 VDC/48 VDC
7	Driver type	**D**: Built-in controller type
8	Type of gear	**T**: **TH** geared type **PS**: **PS** geared type **N**: **PN** geared type **H**: Harmonic geared type None: Standard type
9	Gear ratio	Indicates a number representing the gear ratio. Refer to the table below for the gear type and gear ratio.
10	Length of connection cable	Number: Length of supplied connection cable (m) None: Without connection cable

Type of gear ratio

Type of gear	Gear ratio
TH geared type	**AR24**: 7.2, 10, 20, 30 **AR46**, **AR66**, **AR98**: 3.6, 7.2, 10, 20, 30
PS geared type	**AR24**: 5, 7.2 (*), 10 **AR46**, **AR66**, **AR98**: 5, 7.2 (*), 10, 25, 36, 50
PN geared type	**AR24**, **AR46**: 5, 7.2, 10 **AR66**, **AR98**: 5, 7.2, 10, 25, 36, 50
Harmonic geared type	50, 100

* The model name is "**7**" for the gear ratio 7.2 of the **PS** geared type.

2-3 Information about nameplate

The figure shows an example.

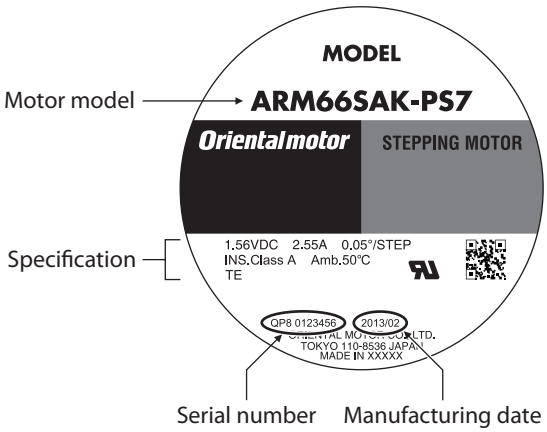

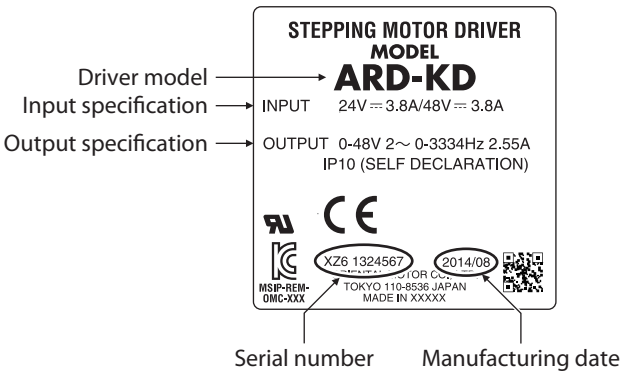

memo The position describing the information may vary depending on the product.

2-4 Combinations of motors and drivers

- ■ in the model names represents a number indicating the gear ratio.
- ○ in the model names represents the cable length (**-1**, **-2**, **-3**) when the connection cable is supplied.

■ Standard type

● **Single shaft**

Model	Motor model	Driver model
AR14SAKD○	ARM14SAK	ARD-KD
AR15SAKD○	ARM15SAK	
AR24SAKD○	ARM24SAK	
AR26SAKD○	ARM26SAK	
AR46SAKD○	ARM46SAK	
AR46AKD○	ARM46AK	
AR66SAKD○	ARM66SAK	
AR66AKD○	ARM66AK	
AR69SAKD○	ARM69SAK	
AR69AKD○	ARM69AK	
AR98SAKD○	ARM98SAK	
AR98AKD○	ARM98AK	

● **Double shaft**

Model	Motor model	Driver model
AR14SBKD○	ARM14SBK	ARD-KD
AR15SBKD○	ARM15SBK	
AR24SBKD○	ARM24SBK	
AR26SBKD○	ARM26SBK	
AR46SBKD○	ARM46SBK	
AR46BKD○	ARM46BK	
AR66SBKD○	ARM66SBK	
AR66BKD○	ARM66BK	
AR69SBKD○	ARM69SBK	
AR69BKD○	ARM69BK	
AR98SBKD○	ARM98SBK	
AR98BKD○	ARM98BK	

● **With electromagnetic brake**

Model	Motor model	Driver model
AR24SMKD○	ARM24SMK	ARD-KD
AR26SMKD○	ARM26SMK	
AR46SMKD○	ARM46SMK	
AR46MKD○	ARM46MK	
AR66SMKD○	ARM66SMK	

Model	Motor model	Driver model
AR66MKD○	ARM66MK	ARD-KD
AR69SMKD○	ARM69SMK	
AR69MKD○	ARM69MK	
AR98SMKD○	ARM98SMK	
AR98MKD○	ARM98MK	

■ TH geared type

● **Single shaft**

Model	Motor model	Driver model
AR24SAKD-T■○	ARM24SAK-T■	ARD-KD
AR46SAKD-T■○	ARM46SAK-T■	
AR46AKD-T■○	ARM46AK-T■	
AR66SAKD-T■○	ARM66SAK-T■	
AR66AKD-T■○	ARM66AK-T■	
AR98SAKD-T■○	ARM98SAK-T■	
AR98AKD-T■○	ARM98AK-T■	

● **With electromagnetic brake**

Model	Motor model	Driver model
AR24SMKD-T■○	ARM24SMK-T■	ARD-KD
AR46SMKD-T■○	ARM46SMK-T■	
AR46MKD-T■○	ARM46MK-T■	
AR66SMKD-T■○	ARM66SMK-T■	
AR66MKD-T■○	ARM66MK-T■	
AR98SMKD-T■○	ARM98SMK-T■	
AR98MKD-T■○	ARM98MK-T■	

■ PS geared type

● **Single shaft**

Model	Motor model	Driver model
AR24SAKD-PS■○	ARM24SAK-PS■	ARD-KD
AR46SAKD-PS■○	ARM46SAK-PS■	
AR46AKD-PS■○	ARM46AK-PS■	
AR66SAKD-PS■○	ARM66SAK-PS■	
AR66AKD-PS■○	ARM66AK-PS■	
AR98SAKD-PS■○	ARM98SAK-PS■	
AR98AKD-PS■○	ARM98AK-PS■	

● **With electromagnetic brake**

Model	Motor model	Driver model
AR46SMKD-PS■○	ARM46SMK-PS■	ARD-KD
AR46MKD-PS■○	ARM46MK-PS■	
AR66SMKD-PS■○	ARM66SMK-PS■	
AR66MKD-PS■○	ARM66MK-PS■	
AR98SMKD-PS■○	ARM98SMK-PS■	
AR98MKD-PS■○	ARM98MK-PS■	

■ PN geared type

● **Single shaft**

Model	Motor model	Driver model
AR24SAKD-N■○	ARM24SAK-N■	ARD-KD
AR46SAKD-N■○	ARM46SAK-N■	
AR46AKD-N■○	ARM46AK-N■	
AR66SAKD-N■○	ARM66SAK-N■	
AR66AKD-N■○	ARM66AK-N■	
AR98SAKD-N■○	ARM98SAK-N■	
AR98AKD-N■○	ARM98AK-N■	

● **With electromagnetic brake**

Model	Motor model	Driver model
AR46SMKD-N■○	ARM46SMK-N■	ARD-KD
AR46MKD-N■○	ARM46MK-N■	
AR66SMKD-N■○	ARM66SMK-N■	
AR66MKD-N■○	ARM66MK-N■	
AR98SMKD-N■○	ARM98SMK-N■	
AR98MKD-N■○	ARM98MK-N■	

■ Harmonic geared type

● **Single shaft**

Model	Motor model	Driver model
AR24SAKD-H■○	ARM24SAK-H■	ARD-KD
AR46SAKD-H■○	ARM46SAK-H■	
AR46AKD-H■○	ARM46AK-H■	
AR66SAKD-H■○	ARM66SAK-H■	
AR66AKD-H■○	ARM66AK-H■	
AR98SAKD-H■○	ARM98SAK-H■	
AR98AKD-H■○	ARM98AK-H■	

● **With electromagnetic brake**

Model	Motor model	Driver model
AR24SMKD-H■○	ARM24SMK-H■	ARD-KD
AR46SMKD-H■○	ARM46SMK-H■	
AR46MKD-H■○	ARM46MK-H■	
AR66SMKD-H■○	ARM66SMK-H■	
AR66MKD-H■○	ARM66MK-H■	
AR98SMKD-H■○	ARM98SMK-H■	
AR98MKD-H■○	ARM98MK-H■	

2-5 Input/output power ratings

- ■ in the model names represents **A** (single shaft), **B** (double shaft), or **M** (with electromagnetic brake).
  For the **AR14** and **AR15** standard type, ■ represents **A** (single shaft) or **B** (double shaft).
  For the geared type, ■ represents **A** (single shaft) or **M** (with electromagnetic brake).
  For the **AR24** of **PN** geared type and **PS** geared type, ■ represents **A** (single shaft).
- For geared type, ● in the model names represents the type of gear and number indicating the gear ratio.
- ☐ in the model names represents the cable length (**-1**, **-2**, **-3**) when the connection cable is supplied.

Model	Motor model	Driver model	Input		Output current per phase
			Voltage	Current	
AR14S■KD☐	ARM14S■K	ARD-KD	24 VDC	0.4 A	0.43 A
AR15S■KD☐	ARM15S■K			0.5 A	0.52 A
AR24S■KD●☐	ARM24S■K●			1.3 A	0.88 A
AR26S■KD☐	ARM26S■K				
AR46S■KD●☐ **AR46■KD●☐**	ARM46S■K● ARM46■K●		24 VDC 48 VDC	1.8 A	1.48 A
AR66S■KD●☐ **AR66■KD●☐**	ARM66S■K● ARM66■K●			3.8 A	2.55 A
AR69S■KD☐ **AR69■KD☐**	ARM69S■K ARM69■K			3.7 A	
AR98S■KD●☐ **AR98■KD●☐**	ARM98S■K● ARM98■K●			3.1 A	

2-6 Names and functions of parts

■ Motor (Example: ARM66SMK)

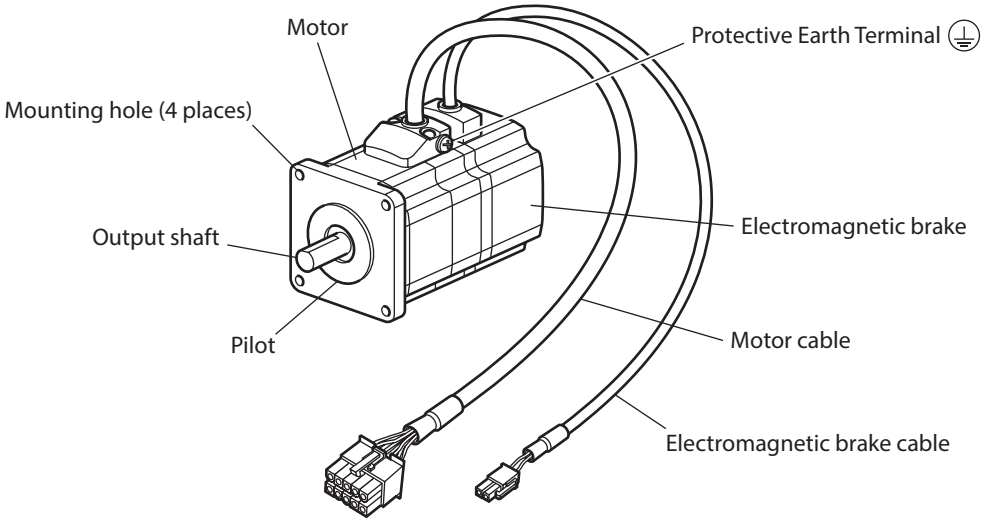

■ Driver

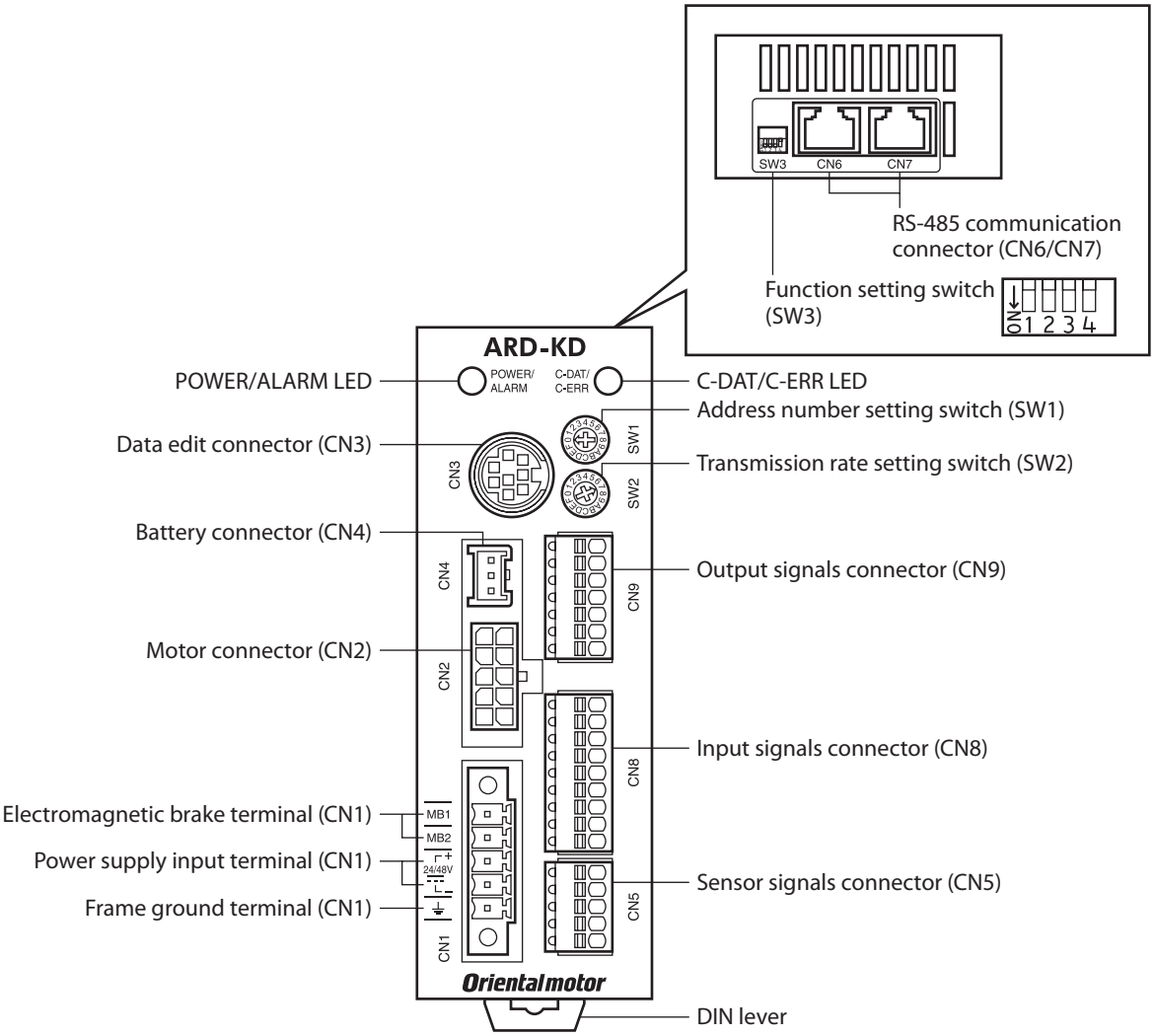

Name	Description	Page
POWER LED (Green)	This LED is lit while the power is input.	–
ALARM LED (Red)	This LED will blink when an alarm generates. It is possible to check the generated alarm by counting the number of times the LED blinks.	p.145
C-DAT LED (Green)	This LED will blink or illuminate steadily when the driver is communicating with the master controller properly via RS-485 communication.	–
C-ERR LED (Red)	This LED will illuminate when a RS-485 communication error occurs with the master controller.	–
Address number setting switch (SW1)	Use this switch when controlling the system via RS-485 communication. Use this switch and SW3-No.1 of the function setting switch, to set the address number (slave address) of RS-485 communication. (Factory setting: 0)	p.215 p.216 p.262
Transmission rate setting switch (SW2)	Use this switch when controlling the system via RS-485 communication. Set the transmission rate of RS-485 communication. (Factory setting: 7)	

Name	Description	Page
Function setting switch (SW3)	Use this switch when controlling the system via RS-485 communication. No.1: Using this switch and the address number setting switch (SW1), set the address number (slave address) of RS-485 communication. (Factory setting: OFF) No.2: Set the protocol of RS-485 communication. (Factory setting: OFF) No.3: Not used. No.4: Set the termination resistor (120 Ω) of RS-485 communication. (Factory setting: OFF)	p.215 p.262
Electromagnetic brake terminal (CN1-MB1/MB2)	Connects the lead wires from the electromagnetic brake. MB1: Electromagnetic brake – (black) MB2: Electromagnetic brake + (white)	p.73
Power supply input terminal (CN1)	Connects the power supply of the driver. +: +24 VDC/48 VDC power supply input –: Power supply GND	
Frame ground terminal (CN1)	Ground using a wire of AWG24 to 16 (0.2 to 1.25 mm^2).	p.72
Motor connector (CN2)	Connects the motor.	p.71
Data edit connector (CN3)	Connects a PC in which the **MEXE02** has been installed, or the **OPX-2A**.	p.77
Battery connector (CN4)	Connects the accessory battery.	p.78
Sensor signals connector (CN5)	Connects the sensor signals.	p.74
RS-485 communication connector (CN6/CN7)	Connects the RS-485 communication cable.	p.77
Input signals connector (CN8)	Connects the input signals.	p.74
Output signals connector (CN9)	Connects the output signals.	

3 Installation

This chapter explains the installation location and installation methods of the motor and driver, along with load installation.

3-1 Location for installation

The motor and driver has been designed and manufactured to be installed within another device. Install them in a well-ventilated location that provides easy access for inspection.
The location must also satisfy the following conditions:

- Inside an enclosure that is installed indoors (provide vent holes)
- Operating ambient temperature
  Motor: −10 to +50 °C (+14 to +122 °F) (non-freezing)
  Harmonic geared type: 0 to +40 °C (+32 to +104 °F) (non-freezing)
  Driver: 0 to +50 °C (+32 to +122 °F) (non-freezing)
- Operating ambient humidity 85% or less (non-condensing)
- Area that is free of explosive atmosphere or toxic gas (such as sulfuric gas) or liquid
- Area not exposed to direct sun
- Area free of excessive amount of dust, iron particles or the like
- Area not subject to splashing water (rain, water droplets), oil (oil droplets) or other liquids
- Area free of excessive salt
- Area not subject to continuous vibration or excessive shocks
- Area free of excessive electromagnetic noise (from welders, power machinery, etc.)
- Area free of radioactive materials, magnetic fields or vacuum
- 1000 m (3300 ft.) or lower above sea level

3-2 Installing the motor

The motor can be installed in any direction.
To allow for heat dissipation and prevent vibration, install the motor on a metal surface of sufficient strength.

● **Installation method A**

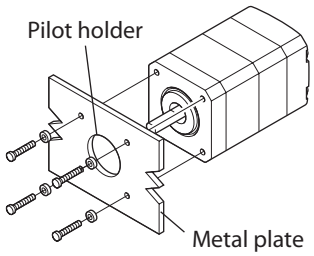

● **Installation method B**

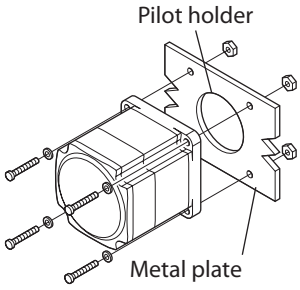

Type	Frame size [mm (in.)]	Bolt size	Tightening torque [N·m (oz-in)]	Effective depth of screw thread [mm (in.)]	Installation method
Standard	20 (0.79)	M2	0.25 (35)	2.5 (0.098)	A
	28 (1.10)	M2.5	0.5 (71)	2.5 (0.098)	
	42 (1.65)	M3	1 (142)	4.5 (0.177)	
	60 (2.36)	M4	2 (280)	–	B
	85 (3.35)	M6	3 (420)		
TH geared	28 (1.10)	M2.5	0.5 (71)	4 (0.157)	A
	42 (1.65) 60 (2.36)	M4	2 (280)	8 (0.315)	
	90 (3.54)	M8	4 (560)	15 (0.591)	

Type	Frame size [mm (in.)]	Bolt size	Tightening torque [N·m (oz-in)]	Effective depth of screw thread [mm (in.)]	Installation method
PS geared **PN** geared Harmonic geared *1	28 (1.10) 30 (1.18)	M3	1 (142)	6 (0.236)	A
	42 (1.65)	M4	2 (280)	8 (0.315)	
	60 (2.36)	M5	2.5 (350)	10 (0.394)	
	90 (3.54)	M8	4 (560)	15 (0.591)	
Harmonic geared *2	90 (3.54)	M8	4 (560)	–	B

*1 **AR24**, **AR46** and **AR66** type only.
*2 **AR98** type only.

3-3 Installing a load

When connecting a load to the motor, align the centers of the motor output shaft and load shaft. Flexible couplings are available as accessories.

Note

- When coupling the load to the motor, pay attention to the centering of the shafts, belt tension, parallelism of the pulleys, and so on. Securely tighten the coupling and pulley set screws.
- Be careful not to damage the output shaft or bearings when installing a coupling or pulley to the motor output shaft.
- Do not modify or machine the motor output shaft. Doing so may damage the bearings and destroy the motor.
- Do not apply strong force using hammer or other tools when removing the parallel key. Doing so may damage the motor output shaft and bearings (ball bearings).

- **Using a coupling**

  Align the centers of the motor output shaft and load shaft in a straight line.

- **Using a belt drive**

  Align the motor output shaft and load shaft in parallel with each other, and position both pulleys so that the line connecting their centers is at a right angle to the shafts.

- **Using a gear drive**

  Align the motor output shaft and gear shaft in parallel with each other, and let the gears mesh at the center of the tooth widths.

• Using a coupling

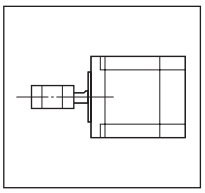

• Using a belt drive

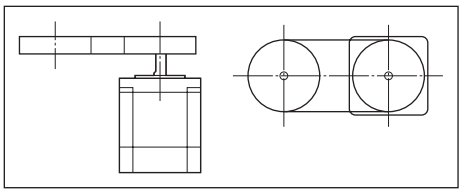

• Using a gear drive

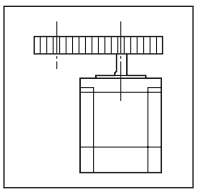

- **Using a parallel key (geared motor)**

  When connecting the load and gear output shaft with a key slot, secure the load using the key supplied with the gear output shaft after machining the key slot on the load.

- **Harmonic geared type; Installing the load on the flange surface**

With a Harmonic geared type (excluding **AR98**), a load can be installed directly to the gear using the load mounting holes provided on the flange surface.

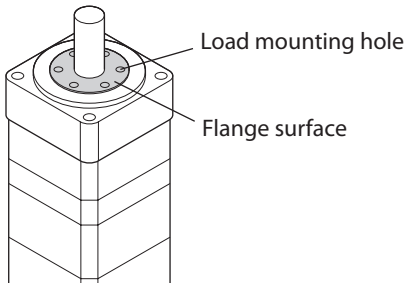

Model	Bolt size	Number of bolts	Tightening torque [N·m (oz-in)]	Effective depth of screw thread [mm (in.)]
AR24	M3	4	1.4 (198)	4 (0.157)
AR46	M3	6	1.4 (198)	5 (0.197)
AR66	M4	6	2.5 (350)	6 (0.236)

memo
- When installing a load on the flange surface, the load cannot be mounted using the key slot in the output shaft.
- Design an appropriate installation layout so that the load will not contact the metal plate or bolts used for installing the motor.

3-4 Permissible radial load and permissible axial load

Note
- If the radial load or axial load exceeds the specified allowable value, repeated load applications may cause the bearing (ball bearings) or output shaft of the motor to undergo a fatigue failure.
- With a double shaft type, do not apply load torque, radial load or axial load to the output shaft on the opposite side of the motor output shaft.

memo
The permissible radial load and permissible axial load of the **PS** geared type and **PN** geared type represent the value that the service life of the gear part satisfies 20,000 hours when either of the radial load or axial load is applied to the gear output shaft.

Type	Model	Gear ratio	Permissible radial load [N (lb.)]					Permissible axial load [N (lb.)]
			Distance from the tip of motor output shaft [mm (in.)]					
			0 (0)	5 (0.2)	10 (0.39)	15 (0.59)	20 (0.79)	
Standard	**AR14** **AR15**	–	12 (2.7)	15 (3.3)	–	–	–	3 (0.67)
	AR24 **AR26**		25 (5.6)	34 (7.6)	52 (11.7)	–	–	5 (1.12)
	AR46		35 (7.8)	44 (9.9)	58 (13)	85 (19.1)	–	15 (3.3)
	AR66 **AR69**		90 (20)	100 (22)	130 (29)	180 (40)	270 (60)	30 (6.7)
	AR98		260 (58)	290 (65)	340 (76)	390 (87)	480 (108)	60 (13.5)
TH geared	**AR24**	All gear ratio	15 (3.3)	17 (3.8)	20 (4.5)	23 (5.1)	–	10 (2.2)
	AR46		10 (2.2)	14 (3.1)	20 (4.5)	30 (6.7)	–	15 (3.3)
	AR66		70 (15.7)	80 (18)	100 (22)	120 (27)	150 (33)	40 (9)
	AR98		220 (49)	250 (56)	300 (67)	350 (78)	400 (90)	100 (22)
PS geared	**AR24**	All gear ratio	45 (10.1)	60 (13.5)	80 (18)	100 (22)	–	40 (9)
	AR46	5	70 (15.7)	80 (18)	95 (21)	120 (27)	–	100 (22)
		7.2	80 (18)	90 (20)	110 (24)	140 (31)	–	
		10	85 (19.1)	100 (22)	120 (27)	150 (33)	–	
		25	120 (27)	140 (31)	170 (38)	210 (47)	–	
		36	130 (29)	160 (36)	190 (42)	240 (54)	–	
		50	150 (33)	170 (38)	210 (47)	260 (58)	–	

Type	Model	Gear ratio	Permissible radial load [N (lb.)]					Permissible axial load [N (lb.)]
			Distance from the tip of motor output shaft [mm (in.)]					
			0 (0)	5 (0.2)	10 (0.39)	15 (0.59)	20 (0.79)	
PS geared	**AR66**	5	170 (38)	200 (45)	230 (51)	270 (60)	320 (72)	200 (45)
		7.2	200 (45)	220 (49)	260 (58)	310 (69)	370 (83)	
		10	220 (49)	250 (56)	290 (65)	350 (78)	410 (92)	
		25	300 (67)	340 (76)	400 (90)	470 (105)	560 (126)	
		36	340 (76)	380 (85)	450 (101)	530 (119)	630 (141)	
		50	380 (85)	430 (96)	500 (112)	600 (135)	700 (157)	
	AR98	5	380 (85)	420 (94)	470 (105)	540 (121)	630 (141)	600 (135)
		7.2	430 (96)	470 (105)	530 (119)	610 (137)	710 (159)	
		10	480 (108)	530 (119)	590 (132)	680 (153)	790 (177)	
		25	650 (146)	720 (162)	810 (182)	920 (200)	1070 (240)	
		36	730 (164)	810 (182)	910 (200)	1040 (230)	1210 (270)	
		50	820 (184)	910 (200)	1020 (220)	1160 (260)	1350 (300)	
PN geared	**AR24**	All gear ratio	45 (10.1)	60 (13.5)	80 (18)	100 (22)	–	40 (9)
	AR46	5	80 (18)	95 (21)	120 (27)	160 (36)	–	100 (22)
		7.2	90 (20)	110 (24)	130 (29)	180 (40)	–	
		10	100 (22)	120 (27)	150 (33)	200 (45)	–	
	AR66	5	240 (54)	260 (58)	280 (63)	300 (67)	330 (74)	200 (45)
		7.2	270 (60)	290 (65)	310 (69)	340 (76)	370 (83)	
		10	300 (67)	320 (72)	350 (78)	380 (85)	410 (92)	
		25	410 (92)	440 (99)	470 (105)	520 (117)	560 (126)	
		36	360 (81)	410 (92)	480 (108)	570 (128)	640 (144)	
		50	360 (81)	410 (92)	480 (108)	570 (128)	700 (157)	
	AR98	5	370 (83)	390 (87)	410 (92)	430 (96)	460 (103)	600 (135)
		7.2	410 (92)	440 (99)	460 (103)	490 (110)	520 (117)	
		10	460 (103)	490 (110)	520 (117)	550 (123)	580 (130)	
		25	630 (141)	660 (148)	700 (157)	740 (166)	790 (177)	
		36	710 (159)	750 (168)	790 (177)	840 (189)	900 (200)	
		50	790 (177)	840 (189)	890 (200)	940 (210)	1000 (220)	
Harmonic geared	**AR24**	All gear ratio	100 (22)	135 (30)	175 (39)	250 (56)	–	140 (31)
	AR46		180 (40)	220 (49)	270 (60)	360 (81)	510 (114)	220 (49)
	AR66		320 (72)	370 (83)	440 (99)	550 (123)	720 (162)	450 (101)
	AR98		1090 (240)	1150 (250)	1230 (270)	1310 (290)	1410 (310)	1300 (290)

■ Permissible moment load of the Harmonic geared type

If an eccentric load is applied on the flange surface when installing an arm or a table, do not exceed the permissible value shown in the table. Use the calculating formula below for the moment load.

Model	Permissible moment load [N·m (oz-in)]
AR24	2.9 (410)
AR46	5.6 (790)
AR66	11.6 (1640)

- **Example 1; When an external force F is applied on the position of distance L from the center of the output flange**

L: Distance from the center of the output flange [m (in.)]
F: External force [N (oz)]

Moment load: M [N·m (oz-in)] = F × L

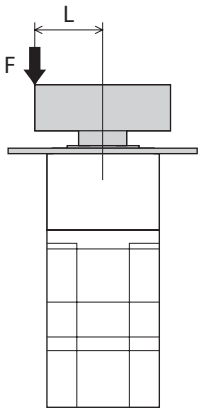

- **Example 2; When external forces F is applied on the position of distance L from the mounting face of the output flange**

L: Distance from the mounting face of the output flange [m (in.)]
F: External force [N (oz)]

Moment load: M [N·m (oz-in)] = F × (L + coefficient "a")

Model	coefficient "a"
AR24	0.00485
AR46	0.009
AR66	0.0114

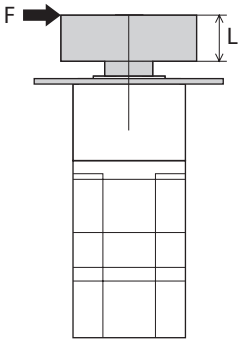

3-5 Installing the driver

Mount the driver to a 35 mm (1.38 in.) width DIN rail.
When installing two or more drivers in parallel, it is possible to install them closely in the horizontal direction. Provide a minimum clearance of 50 mm (1.97 in.) in the vertical direction.
When installing three or more drivers closely, the heat generation of the inside drivers become high. Install the less frequently used drivers toward the inside. Use the "overheat warning" parameter to check the inside temperature of the driver.

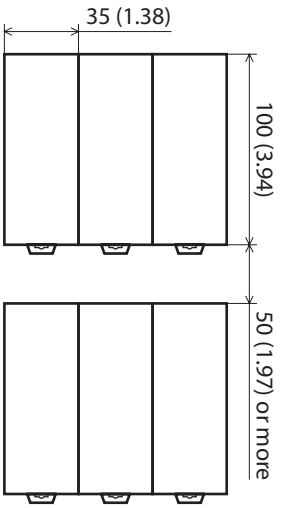

Unit: mm (in.)

memo

- Install the driver in an enclosure whose pollution degree is 2 or better environment, or whose degree of protection is IP54 minimum.
- Do not install any equipment that generates a large amount of heat or noise near the driver.
- Do not install the driver underneath the controller or other equipment vulnerable to heat.
- Check ventilation if the ambient temperature of the driver exceeds 50 °C (122 °F).
- Be sure to install the driver vertically (vertical position).

1. Pull down the DIN lever of the driver and lock it. Hang the hook at the rear to the DIN rail.
2. Hold the driver to the DIN rail, and push up the DIN lever to secure.
3. Secure both sides of the driver using end plates.

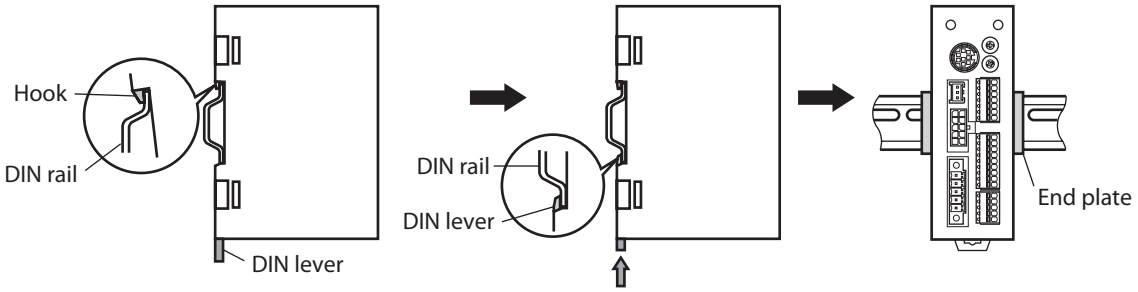

Removing from DIN rail

Pull the DIN lever down until it locks using a flat-tip screwdriver, and lift the bottom of the driver to remove it from the rail.
Use force of about 10 to 20 N (2.2 to 4.5 lb.) to pull the DIN lever to lock it. Excessive force may damage the DIN lever.

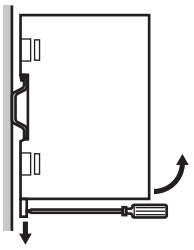

Dimension [unit: mm (in.)]

Mass: 0.17 kg (0.37 lb.)

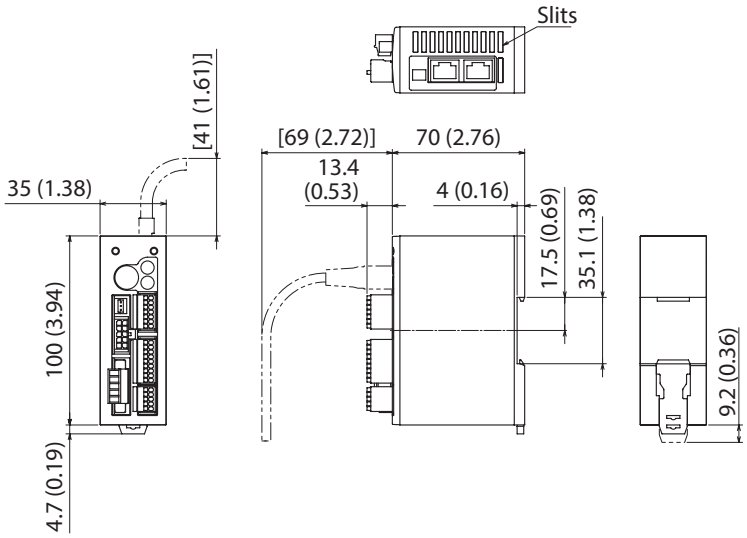

3-6 Installing the battery

A battery and battery holder are included in an accessory battery set **BAT01B**. Use the battery holder to secure the battery. See p.84 for accessory.

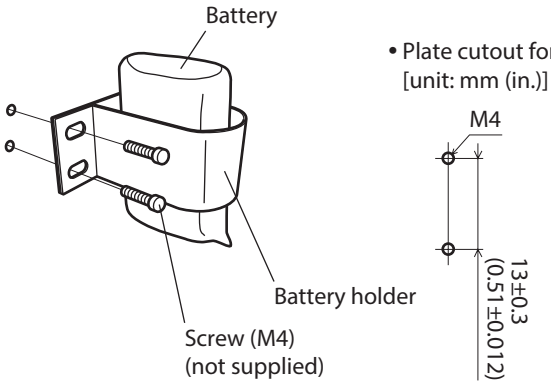

• Plate cutout for mounting
[unit: mm (in.)]

4 Connection

This chapter explains how to connect the motor, I/O signals and power supply to the driver, as well as grounding method. The installation and wiring methods in compliance with the EMC Directive as well as protection against noise are also explained.

⚠Warning For protection against electric shock, do not turn on the power supply until the wiring is completed.

4-1 Connection example

The following figure shows the electromagnetic brake type motor.

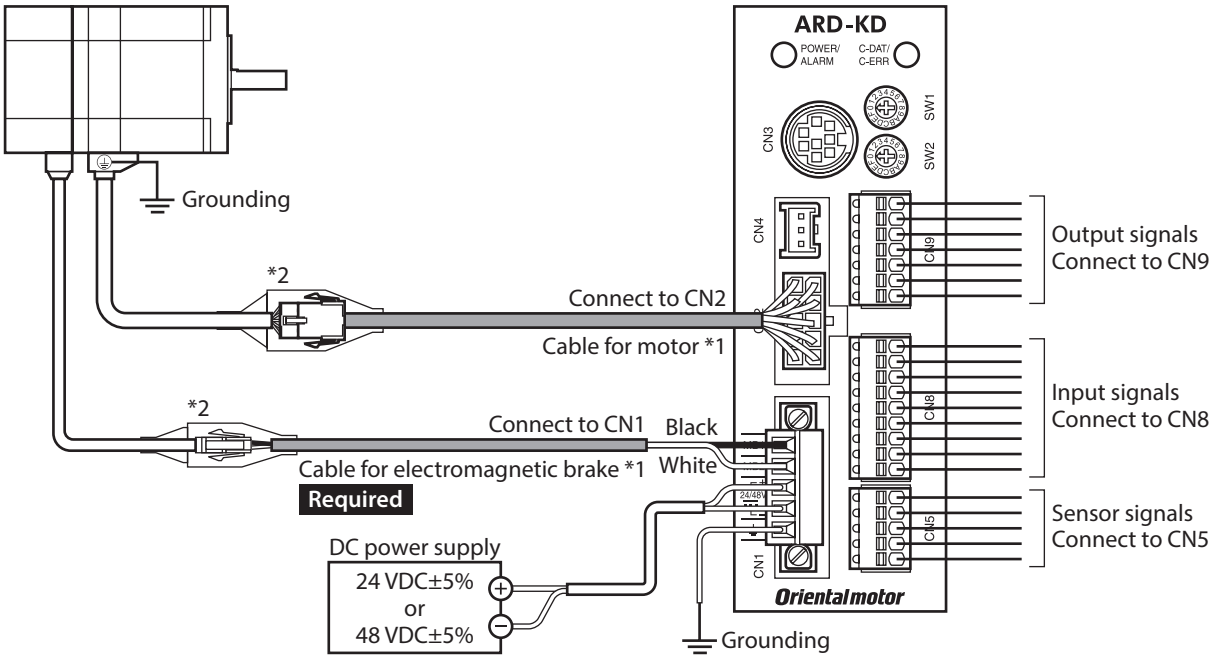

*1 Cables represented in gray color are supplied with the product or sold separately. Use the cable for motor when the length of the motor cable is not enough. Keep 30 m (98.4 ft.) or less for the wiring distance between the motor and driver.

*2 If connector covers are attached on cables, cover the connected connectors using them.

Note

- Have the connector plugged in securely. Insecure connector connection may cause malfunction or damage to the motor or driver.
- When plugging/unplugging the connector, turn off the power and wait for the POWER LED to turn off before doing so. The residual voltage may cause electric shock.
- When connecting, check the silk screen of the driver and pay attention to the polarity of the power supply. Reverse-polarity connection may cause damage to the driver. The power-supply circuit and the RS-485 communication circuit are not insulated. Therefore, when controlling multiple drivers via RS-485 communication, the reverse polarity of the power supply will cause a short circuit and may result in damage to the drivers.
- Do not wire the power supply cable of the driver in the same cable duct with other power lines or motor cables. Doing so may cause malfunction due to noise.
- The lead wires of the "cable for electromagnetic brake" have polarities, so connect them in the correct polarities. If the lead wires are connected with their polarities reversed, the electromagnetic brake will not operate properly.

memo

- If the distance between the motor and driver is extended to 20 m (65.6 ft.) or longer, use a power supply of 24 VDC±4%.
- When unplugging the connector, do so while pressing the latches on the connector.
- When installing the motor to a moving part, use an accessory flexible cable having excellent flex resistance. Refer to p.81 for details.

● **Cable size and tightening torque**

Connector	Terminal symbol	Recommended cable size	Screw size	Tightening torque [N·m (oz-in)]
CN1	24/48V+ 24/48V–	Stranded wire AWG24 to 16 (0.2 to 1.25 mm^2)	M2	0.22 to 0.25 (31 to 35)
	MB1, MB2	Stranded wire AWG20 (0.5 mm^2)		
CN5	–	Stranded wire AWG26 to 20 (0.14 to 0.5 mm^2)	–	–
CN8	–	Stranded wire AWG26 to 20 (0.14 to 0.5 mm^2)	–	–
CN9	–	Stranded wire AWG26 to 20 (0.14 to 0.5 mm^2)	–	–

4-2 Grounding the motor and driver

■ Grounding the motor

Be sure to ground the Protective Earth Terminal of the motor. (It is no need to ground when the driver power supply voltage is 24 VDC.)

- Grounding wire: AWG18 (0.75 mm^2) or more
- Screw size: M4
- Tightening torque: 1.2 N·m (170 oz-in)

When grounding, use a round terminal and secure it with a mounting screw with a washer. Ground wires and crimp terminals are not supplied.

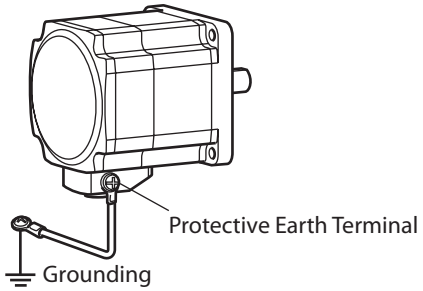

■ Grounding the driver

Ground the frame ground terminal (CN1) as necessary. Ground using a wire of AWG24 to 16 (0.2 to 1.25 mm^2), and do not share the protective earth terminal with a welder or any other power equipment.

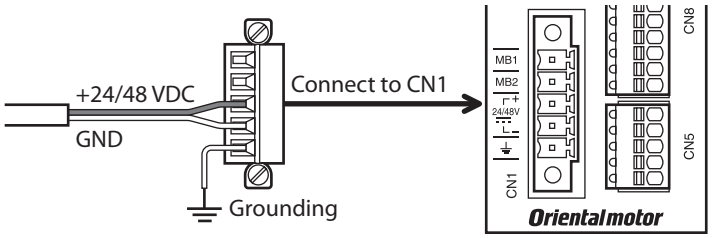

4-3 Connecting the power supply and electromagnetic brake

Use the CN1 connector (5 pins) to connect the power supply and electromagnetic brake

■ Connecting method

1. Strip the insulation cover of the lead wire (AWG24 to 16: 0.2 to 1.25 mm^2) by 7 mm (0.28 in.)
2. Insert each lead wire into the CN1 connector and tighten the screw with a flat-tip screwdriver.
   Connector screw size: M2
   Tightening torque: 0.22 to 0.25 N·m (31 to 35 oz-in)
3. Insert the CN1 connector into the CN1, and tighten the screw.
   Connector screw size: M2.5
   Tightening torque: 0.4 N·m (56 oz-in)

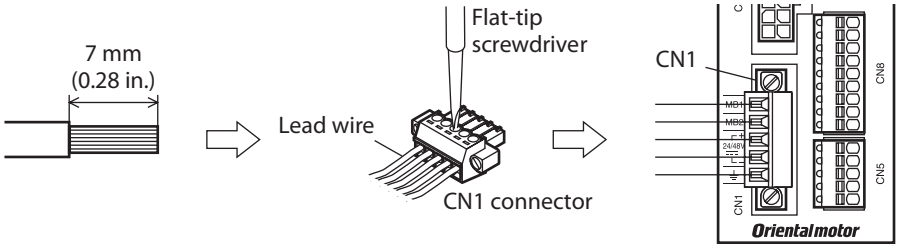

Pin assignment

Pin No.	Signal name	Description
1	MB1	Electromagnetic brake − (Black)
2	MB2	Electromagnetic brake + (White)
3	+	24 VDC/48 VDC power supply
4	−	Power supply ground
5	FG	Frame ground

■ Power supply current capacity

Model	Input power supply voltage	Power supply current capacity	
		Without electromagnetic brake	With electromagnetic brake
AR14	24 VDC±5%	0.4 A or more	–
AR15		0.5 A or more	–
AR24, **AR26**		1.25 A or more	1.3 A or more
AR46	24 VDC±5% 48 VDC±5%	1.72 A or more	1.8 A or more
AR66		3.55 A or more	3.8 A or more
AR69		3.45 A or more	3.7 A or more
AR98		2.85 A or more	3.1 A or more

4-4 Connecting the I/O signals

■ Wiring method

- Applicable lead wire: AWG26 to 20 (0.14 to 0.5 mm^2)
- Strip length of the insulation cover: 8 mm (0.31 in.)

1. Strip the insulation cover of the lead wire.
2. Insert the lead wire while pushing the button of the orange color on the connector with a flat-tip screwdriver.
3. After having inserted, release the button to secure the lead wire.

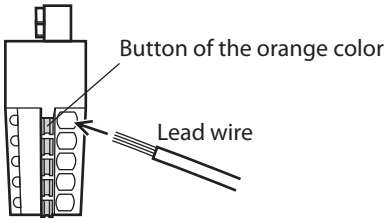

■ Pin assignment

● **Sensor signals (CN5)**

Pin No.	Signal name	Description
1	+LS	Limit sensor input +
2	–LS	Limit sensor input –
3	HOMES	Mechanical home sensor input
4	SLIT	Slit sensor input
5	IN-COM2	Sensor common input

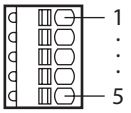

● **Input signals (CN8)**

Pin No.	Signal name	Description *
1	IN0	Control input 0 (HOME)
2	IN1	Control input 1 (START)
3	IN2	Control input 2 (M0)
4	IN3	Control input 3 (M1)
5	IN4	Control input 4 (M2)
6	IN5	Control input 5 (FREE)
7	IN6	Control input 6 (STOP)
8	IN7	Control input 7 (ALM-RST)
9	IN-COM1	Input signal common

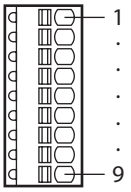

* ( ): Initial value

● **Output signals (CN9)**

Pin No.	Signal name	Description *
1	OUT0	Control output 0 (HOME-P)
2	OUT1	Control output 1 (END)
3	OUT2	Control output 2 (AREA1)
4	OUT3	Control output 3 (READY)
5	OUT4	Control output 4 (WNG)
6	OUT5	Control output 5 (ALM)
7	OUT-COM	Output signal common

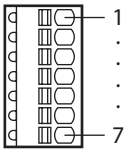

* ( ): Initial value

■ Connection example with a current sink output circuit (NPN specifications)

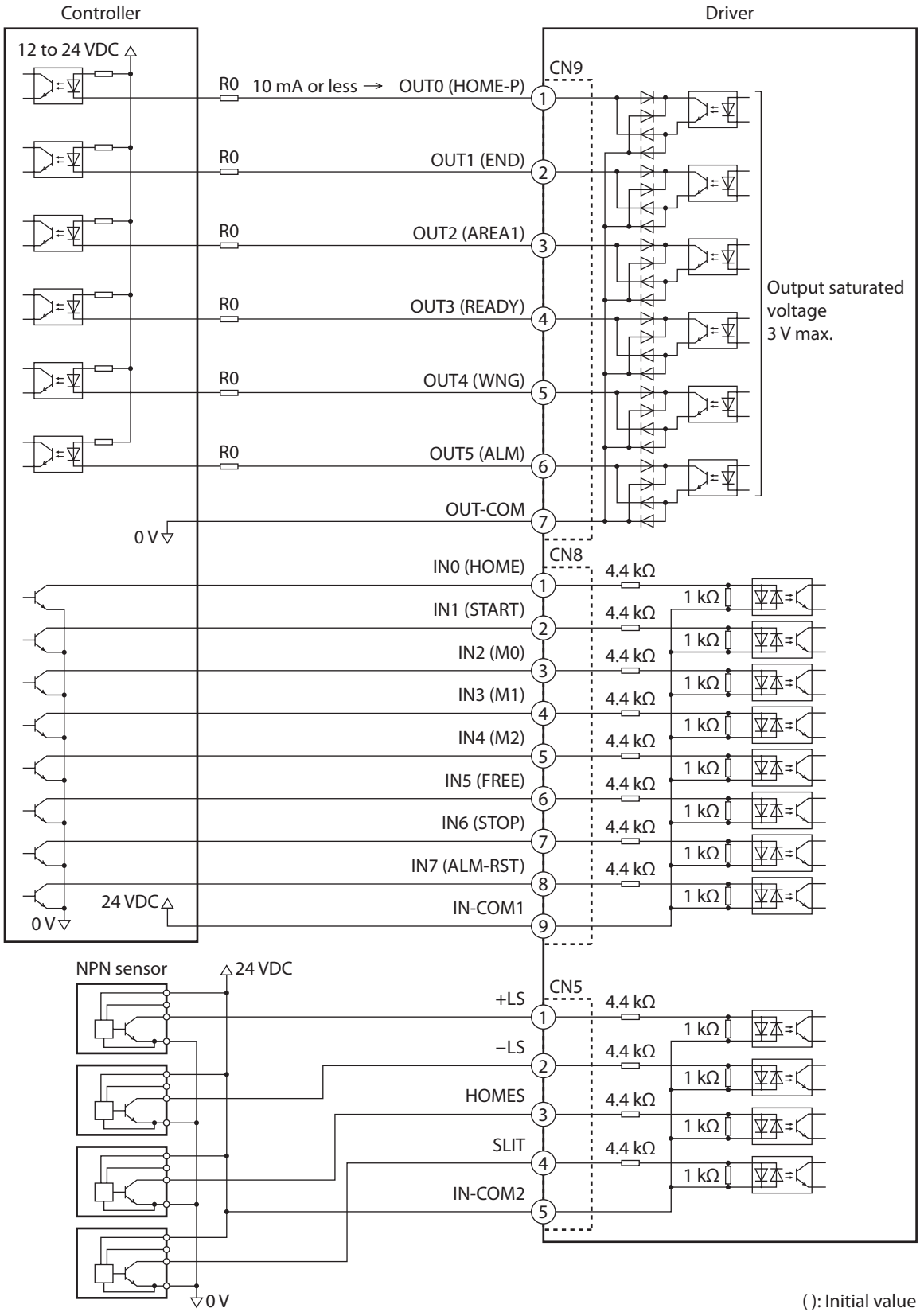

memo

- Use input signals at 24 VDC.
- Use output signals at 12 to 24 VDC 10 mA or less. If the current exceeds 10 mA, connect an external resistor R0 so that the current becomes 10 mA or less.
- The saturated voltage of the output signal is 3 VDC maximum.

■ Connection example with a current source output circuit (PNP specifications)

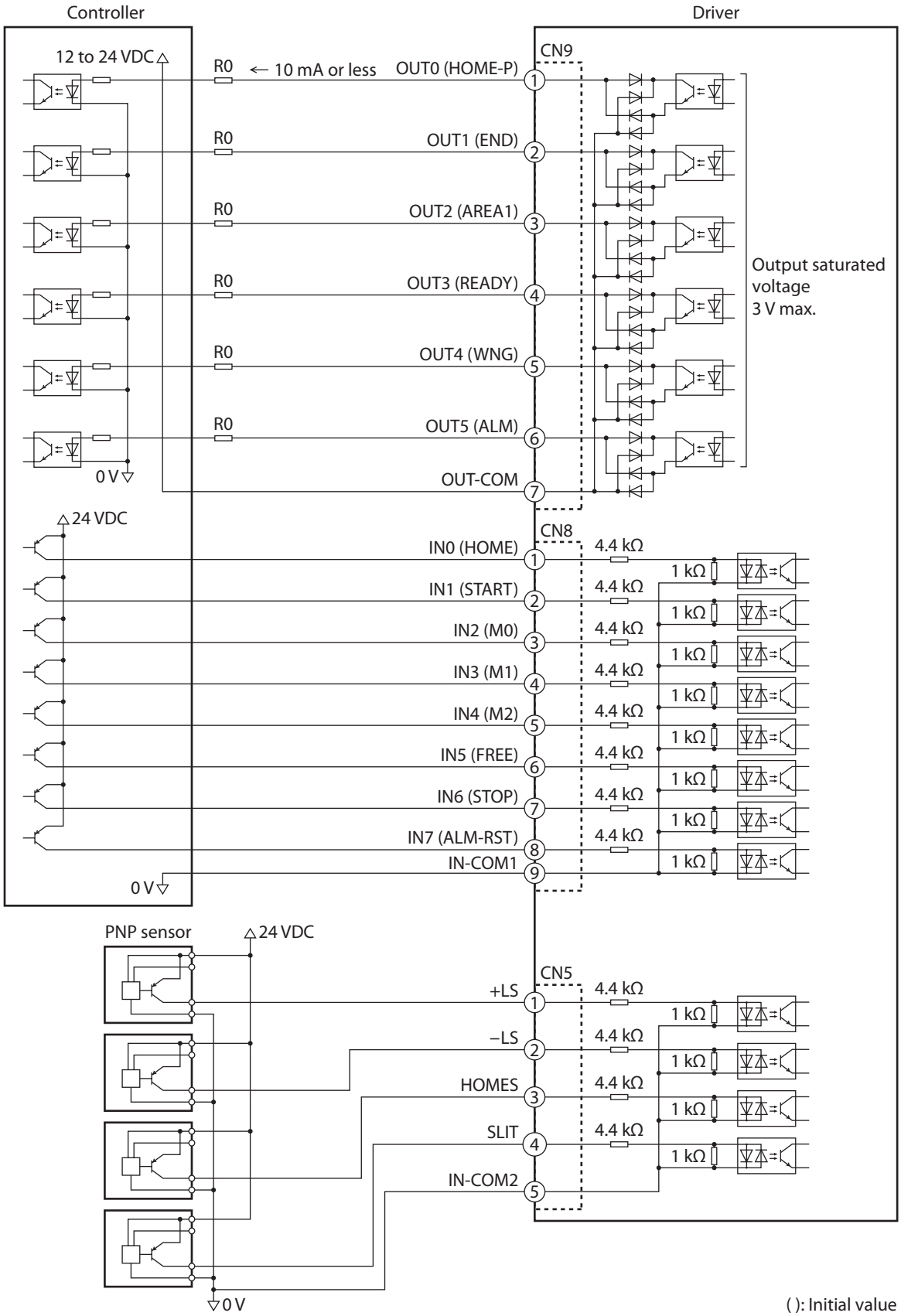

( ): Initial value

memo

- Use input signals at 24 VDC.
- Use output signals at 12 to 24 VDC 10 mA or less. If the current exceeds 10 mA, connect an external resistor R0 so that the current becomes 10 mA or less.
- The saturated voltage of the output signal is 3 VDC maximum.

4-5 Connecting the data setter

Connect the communication cable for the support software or **OPX-2A** cable to the data edit connector (CN3) on the driver.

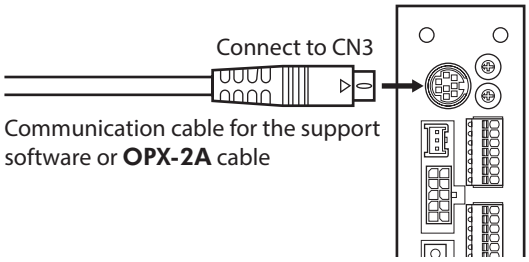

⚠Caution The power supply connector (CN1), data edit connector (CN3) and RS-485 communication connector (CN6/CN7) of the driver are not electrically insulated. When grounding the positive terminal of the power supply, do not connect any equipment (PC, etc.) whose negative terminal is grounded. Doing so may cause the driver and these equipment to short, damaging both.

4-6 Connecting the RS-485 communication cable

Connect this cable if you want to control your product via RS-485 communication. Connect the RS-485 communication cable to CN6 or CN7 on the driver.
You can use the vacant connectors to connect a different driver. A driver link cable is available as an accessory. See p.83.
You can also use a commercial LAN cable (straight cable) to link drivers.

Drivers can be linked.

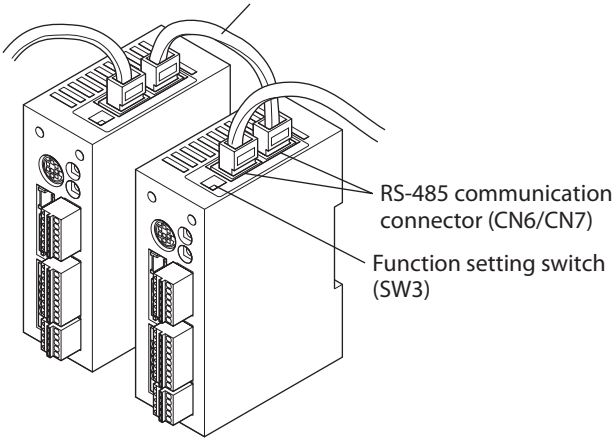

• Internal input circuit

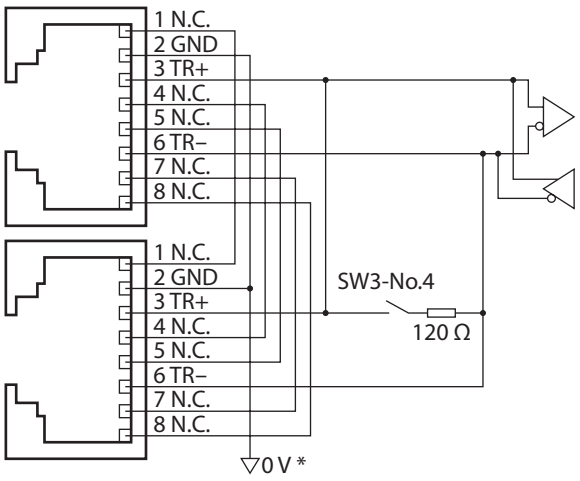

* The GND line is used in common with CN1 (not insulated).

CN6/CN7 pin assignment

Pin No.	Signal name	Description
1	N.C.	Not used.
2	GND	GND
3	TR+	RS-485 communication signal (+)
4	N.C.	Not used.
5	N.C.	
6	TR–	RS-485 communication signal (–)
7	N.C.	Not used.
8	N.C.	

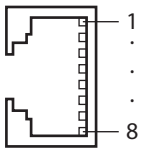

4-7 Connecting and charging the battery

Connect an accessory battery for the absolute-position backup system.
When the battery is connected to the battery connector (CN4) of the driver and the 24 VDC power is turned on, the battery will start charging. It takes approximately 32 hours to fully charge the battery [at an ambient temperature of 20 °C (68 °F)]. Refer p.84 for accessory.
Refer to p.166 for setting method of the absolute-position backup system.

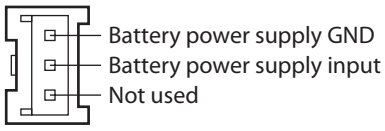

Battery specifications

Battery type	Sealed nickel-metal hydride battery
Nominal voltage	2.4 V
Rated capacity	1900 mAh
Mass	0.10 kg (3.5 oz)
Expected life	Approximately 4 years *1
Charging time	32 hours *1
Data retention period	Approximately 360 hours (Approximately 15 days) *1 *2
Ambient temperature	0 to +40 °C (+32 to +104 °F) (non-freezing)
Ambient humidity	45 to 85% (non-condensing)

*1 At an ambient temperature of 20 °C (68 °F)
*2 After the power is cut off with the battery fully charged.

4-8 Noise measures

The electrical noise is of two types: One is a noise to invade into the driver from the outside and cause the driver malfunction, and the other is a noise to emit from the driver and cause peripheral equipments malfunction.
For the noise that is invaded from the outside, take measures to prevent the driver malfunction. It is needed to take adequate measures because signal lines are very likely to be affected by the noise.
For the noise that is emitted from the driver, take measures to suppress it.

■ Measures against electrical noise

There are the following three methods mainly to take measures against the electrical noise.

- **Noise suppression**
  - When relays or electromagnetic switches are used together with the system, use noise filters and CR circuits to suppress surges generated by them.
  - Use an accessory cable when extending a wiring distance between the motor and driver.
  - Cover the driver by a metal plate such as aluminum. This is effective in shielding the electrical noise emitted from the driver.
- **Prevention of noise propagation**
  - Connect a noise filter in the power supply cable of driver.
  - Place the power lines, such as the motor and power supply cables, keeping a distance of 200 mm (7.87 in.) or more from the signal lines, and also do not bundle them or wire them in parallel. If the power cables and signal cables have to cross, cross them at a right angle.
  - Use shielded twisted pair cables for power lines and signal lines.
  - Keep cables as short as possible without coiling and bundling extra lengths.
  - When grounding PE terminals of multiple drivers to a grounding point, it becomes more effective to block the electrical noise since impedance on the grounding point is decreased. However, ground them so that a potential difference does not occur among the grounding points. An accessory driver cable including with a ground wire is available. Refer to p.83 for details.
  - To ground a shielded cable, use a metal cable clamp that will maintain contact with the entire circumference of the cable. Ground the cable clamp near the product.

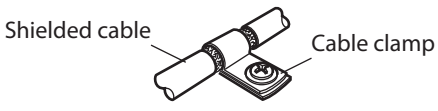

● **Suppression of effect by noise propagation**

Loop the noise propagated cable around a ferrite core. Doing so will prevent the propagated noise invades into the driver or emits from the driver. The frequency band in which an effect by the ferrite core can be seen is generally 1 MHz or more. Check the frequency characteristics of the ferrite core used. To increase the effect of noise attenuation by the ferrite core, loop the cable a lot.

■ Noise suppression parts

● **Noise filter**

- Connect the following noise filter (or equivalent) to the DC power line. When using a power supply transformer, be sure to connect a noise filter to the AC input side of the power supply transformer. Doing so will prevent the propagated noise through the power line. Install the noise filter as close to the driver as possible.

Manufacture	Model
SOSHIN ELECTRIC CO.,LTD	HF2010A-UPF
Schaffner EMC	FN2070-10-06

- Use the AWG18 (0.75 mm^2) or thicker wire for the input and output cables of the noise filter, and secure firmly using a cable clamp etc. so that the cable does not come off the enclosure.
- Place the input cable as far apart as possible from the output cable, and do not wire the cables in parallel. If the input and output cable are placed at a close distance or if they are wired in parallel, the noise in the enclosure affects the power cable through stray capacitance, and the noise suppressing effect will reduce.
- Connect the ground terminal of the noise filter to the grounding point, using as thick and short a wire as possible.
- When connecting a noise filter in an enclosure, wire the input cable of the noise filter as short as possible. Wiring in long distance may reduce the noise suppressing effect.

■ Noise suppression parts (accessories)

Refer to p.83 for accessories.

● **Driver cable**

This cable is a shielded twisted pair cable for good noise immunity to connect the driver and controller. The ground wires useful to grounding are provided at both ends of the cable. The EMC measures are conducted using the Oriental Motor driver cable.

● **Surge suppressor**

This product is effective to suppress the surge which occurs in a relay contact part. Connect it when using a relay or electromagnetic switch. CR circuit for surge suppression and CR circuit module are provided.

4-9 Conformity to the EMC Directive

Effective measures must be taken against the EMI that the motor and driver may give to adjacent control-system equipment, as well as the EMS of the motor and driver itself, in order to prevent a serious functional impediment in the machinery. The use of the following installation and wiring methods will enable the motor and driver to be compliant with the EMC Directive. Refer to p.325 for the applicable standards.
Oriental Motor conducts EMC measurements on its motors and drivers in accordance with "Example of motor and driver installation and wiring" on p.80.
The user is responsible for ensuring the machine's compliance with the EMC Directive, based on the installation and wiring explained below.

● **Connecting noise filter**

In large electrically noisy environments, connect a noise filter. Refer to "Noise filter" in the above.

● **Connecting the power supply**

Use a DC power supply that conforms to the EMC Directive.
Use a shielded twisted pair cable for wiring. Refer to "Prevention of noise propagation" on p.78 for wiring method.

● **Connecting the motor cable**

Use an accessory motor cable when extending the wiring distance between the motor and driver.

● **Connecting the signal cable**

Refer to "Prevention of noise propagation" on p.78.

- **How to ground**
  - The cable used to ground the motor, driver and noise filter must be as thick and short as possible so that no potential difference is generated.
  - Choose a large, thick and uniformly conductive surface for the grounding point.
  - Be sure to ground the Protective Earth Terminal of the motor and driver. Refer to p.72 for grounding method.
- **Example of motor and driver installation and wiring**

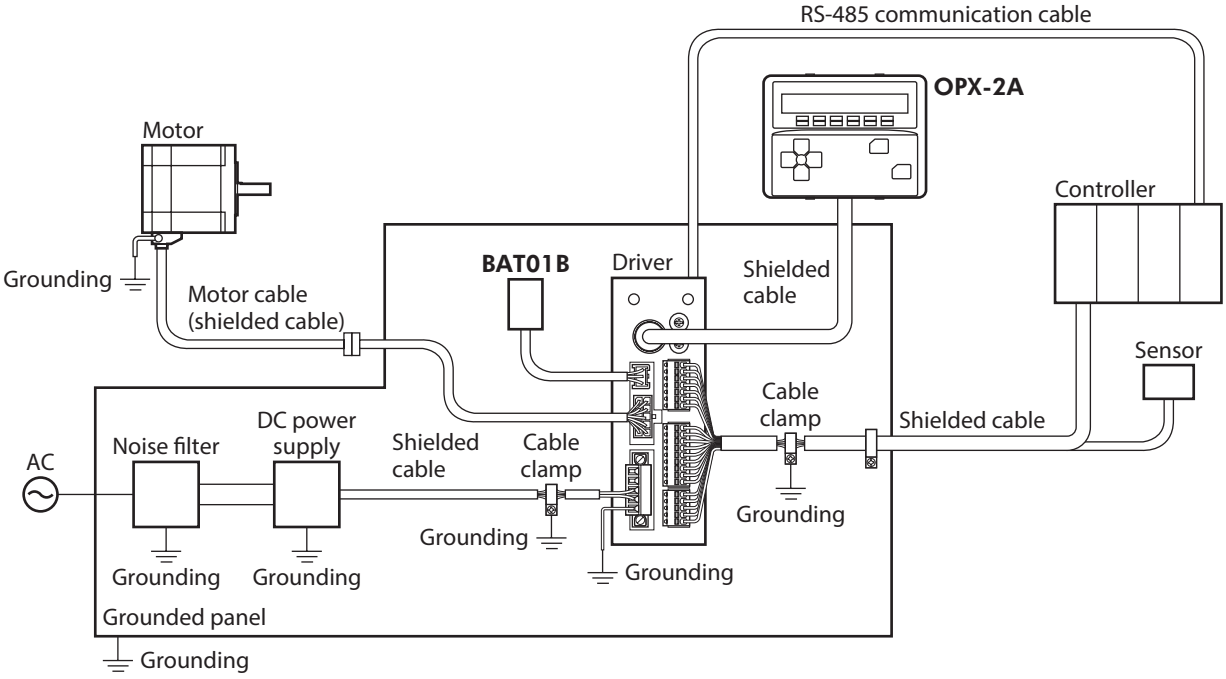

Note The driver uses parts that are sensitive to electrostatic charge. Take measures against static electricity since static electricity may cause the driver to malfunction or suffer damage.

5 Accessories

5-1 Motor cable set

■ Connection cable set

Use when connecting a motor and a driver. The cable set for electromagnetic brake motors consists of two cables, one for motor and the other for electromagnetic brake.

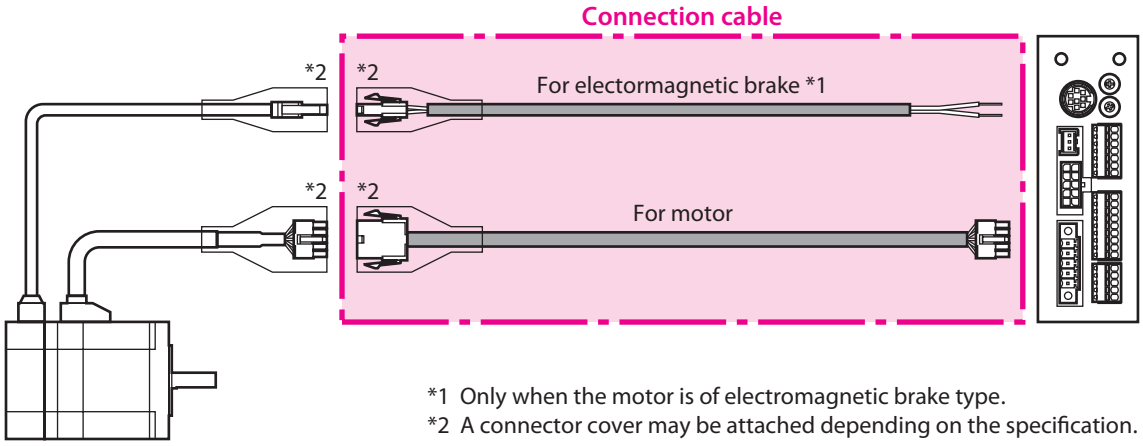

*1 Only when the motor is of electromagnetic brake type.
*2 A connector cover may be attached depending on the specification.

memo When installing the motor on a moving part, use a flexible cable having excellent flex resistance.

● **Connection cable set**
For standard type motor

Model (With connector cover)	Model (Without connector cover)	Length [m (ft.)]
CC010VAF2	**CC010VA2F2**	1 (3.3)
CC020VAF2	**CC020VA2F2**	2 (6.6)
CC030VAF2	**CC030VA2F2**	3 (9.8)
CC050VAF2	**CC050VA2F2**	5 (16.4)
CC070VAF2	**CC070VA2F2**	7 (23)
CC100VAF2	**CC100VA2F2**	10 (32.8)
CC150VAF2	**CC150VA2F2**	15 (49.2)
CC200VAF2	**CC200VA2F2**	20 (65.6)
CC300VAF2	**CC300VA2F2**	30 (98.4)

● **Connection cable set**
For electromagnetic brake type motor

Model (With connector cover)	Model (Without connector cover)	Length [m (ft.)]
CC010VAFB2	**CC010VA2FB2**	1 (3.3)
CC020VAFB2	**CC020VA2FB2**	2 (6.6)
CC030VAFB2	**CC030VA2FB2**	3 (9.8)
CC050VAFB2	**CC050VA2FB2**	5 (16.4)
CC070VAFB2	**CC070VA2FB2**	7 (23)
CC100VAFB2	**CC100VA2FB2**	10 (32.8)
CC150VAFB2	**CC150VA2FB2**	15 (49.2)
CC200VAFB2	**CC200VA2FB2**	20 (65.6)
CC300VAFB2	**CC300VA2FB2**	30 (98.4)

● **Flexible connection cable set**
For standard type motor

Model (With connector cover)	Model (Without connector cover)	Length [m (ft.)]
CC010VAR2	**CC010VA2R2**	1 (3.3)
CC020VAR2	**CC020VA2R2**	2 (6.6)
CC030VAR2	**CC030VA2R2**	3 (9.8)
CC050VAR2	**CC050VA2R2**	5 (16.4)
CC070VAR2	**CC070VA2R2**	7 (23)
CC100VAR2	**CC100VA2R2**	10 (32.8)
CC150VAR2	**CC150VA2R2**	15 (49.2)
CC200VAR2	**CC200VA2R2**	20 (65.6)
CC300VAR2	**CC300VA2R2**	30 (98.4)

● **Flexible connection cable set**
For electromagnetic brake type motor

Model (With connector cover)	Model (Without connector cover)	Length [m (ft.)]
CC010VARB2	**CC010VA2RB2**	1 (3.3)
CC020VARB2	**CC020VA2RB2**	2 (6.6)
CC030VARB2	**CC030VA2RB2**	3 (9.8)
CC050VARB2	**CC050VA2RB2**	5 (16.4)
CC070VARB2	**CC070VA2RB2**	7 (23)
CC100VARB2	**CC100VA2RB2**	10 (32.8)
CC150VARB2	**CC150VA2RB2**	15 (49.2)
CC200VARB2	**CC200VA2RB2**	20 (65.6)
CC300VARB2	**CC300VA2RB2**	30 (98.4)

■ Extension cable set

Use when extending the distance between a motor and a driver or when the length of the connection cable used is not enough. Extend the distance by connecting the extension cable to the connection cable.
The cable set for electromagnetic brake motors consists of two cables, one for motor and the other for electromagnetic brake.

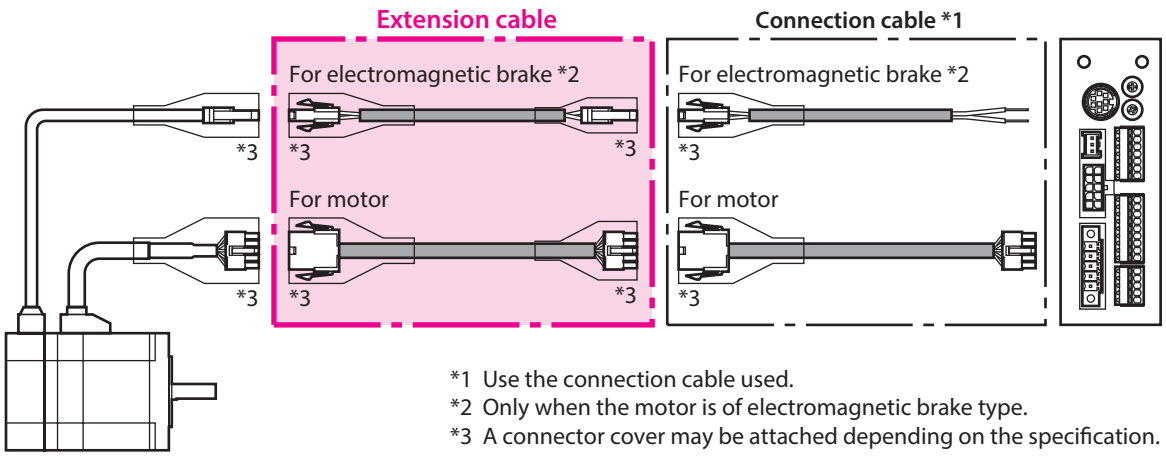

*1 Use the connection cable used.
*2 Only when the motor is of electromagnetic brake type.
*3 A connector cover may be attached depending on the specification.

memo
- When installing the motor on a moving part, use a flexible cable having excellent flex resistance.
- When extending the wiring length by connecting an extension cable to the connection cable, keep the total cable length to 30 m (98.4 ft.) or less.

● **Extension cable set**
For standard type motor

Model (With connector cover)	Model (Without connector cover)	Length [m (ft.)]
CC010VAFT2	**CC010VA2F2**	1 (3.3)
CC020VAFT2	**CC020VA2F2**	2 (6.6)
CC030VAFT2	**CC030VA2F2**	3 (9.8)
CC050VAFT2	**CC050VA2F2**	5 (16.4)
CC070VAFT2	**CC070VA2F2**	7 (23)
CC100VAFT2	**CC100VA2F2**	10 (32.8)
CC150VAFT2	**CC150VA2F2**	15 (49.2)
CC200VAFT2	**CC200VA2F2**	20 (65.6)

● **Extension cable set**
For electromagnetic brake type motor

Model (With connector cover)	Model (Without connector cover)	Length [m (ft.)]
CC010VAFBT2	**CC010VA2FBT2**	1 (3.3)
CC020VAFBT2	**CC020VA2FBT2**	2 (6.6)
CC030VAFBT2	**CC030VA2FBT2**	3 (9.8)
CC050VAFBT2	**CC050VA2FBT2**	5 (16.4)
CC070VAFBT2	**CC070VA2FBT2**	7 (23)
CC100VAFBT2	**CC100VA2FBT2**	10 (32.8)
CC150VAFBT2	**CC150VA2FBT2**	15 (49.2)
CC200VAFBT2	**CC200VA2FBT2**	20 (65.6)

● **Flexible extension cable set For standard type motor**

Model (With connector cover)	Model (Without connector cover)	Length [m (ft.)]
CC010VART2	**CC010VA2R2**	1 (3.3)
CC020VART2	**CC020VA2R2**	2 (6.6)
CC030VART2	**CC030VA2R2**	3 (9.8)
CC050VART2	**CC050VA2R2**	5 (16.4)
CC070VART2	**CC070VA2R2**	7 (23)
CC100VART2	**CC100VA2R2**	10 (32.8)
CC150VART2	**CC150VA2R2**	15 (49.2)
CC200VART2	**CC200VA2R2**	20 (65.6)

● **Flexible extension cable set For electromagnetic brake type motor**

Model (With connector cover)	Model (Without connector cover)	Length [m (ft.)]
CC010VARBT2	**CC010VA2RBT2**	1 (3.3)
CC020VARBT2	**CC020VA2RBT2**	2 (6.6)
CC030VARBT2	**CC030VA2RBT2**	3 (9.8)
CC050VARBT2	**CC050VA2RBT2**	5 (16.4)
CC070VARBT2	**CC070VA2RBT2**	7 (23)
CC100VARBT2	**CC100VA2RBT2**	10 (32.8)
CC150VARBT2	**CC150VA2RBT2**	15 (49.2)
CC200VARBT2	**CC200VA2RBT2**	20 (65.6)

5-2 Setting tool

■ Communication cable for the support software

Be sure to purchase the communication cable for the support software when connecting a driver and PC in which the support software **MEXE02** has been installed.
This is a set of a PC interface cable and USB cable. The cable is connected to the USB port on the PC.

Model: **CC05IF-USB** [5 m (16.4 ft.)]

The **MEXE02** can be downloaded from Oriental Motor Website Download Page. Also, the **MEXE02** is provided in the form of a storage medium. For details, check out our web site or contact your nearest Oriental Motor sales office.

■ Data setter

The data setter lets you set operation data and parameters for your **AR** Series with ease and also functions as a monitor.

Model: **OPX-2A**

5-3 Wiring support tool

■ RS-485 communication cable

You can link drivers using this cable connected to the RS-485 communication connectors (CN6, CN7).

Model: **CC001-RS4** [0.1 m (0.3 ft.)]
CC002-RS4 [0.25 m (0.8 ft.)]

■ Driver cable

A shielded cable for driver control I/O signals offering excellent noise resistance. The ground wires useful to grounding are provided at both ends of the cable.
Select the cable suitable for the number of I/O signals connected.

Driver cable model list

Cable length [m (ft.)]	Number of lead wire			
	6 pcs.	10 pcs.	12 pcs.	16 pcs.
0.5 (1.6)	**CC06D005B-1**	**CC10D005B-1**	**CC12D005B-1**	**CC16D005B-1**
1 (3.3)	**CC06D010B-1**	**CC10D010B-1**	**CC12D010B-1**	**CC16D010B-1**
1.5 (4.9)	**CC06D015B-1**	**CC10D015B-1**	**CC12D015B-1**	**CC16D015B-1**
2 (6.6)	**CC06D020B-1**	**CC10D020B-1**	**CC12D020B-1**	**CC16D020B-1**

■ CR circuit for surge suppression

This product is effective to suppress the serge which occurs in a relay contact part. Use it to protect the contacts of the relay or switch.

Model: **EPCR1201-2**

■ CR circuit module

This product is effective to suppress the surge which occurs in a relay contact part. Use this product to protect the contacts of the relay or switch.
4 pieces of CR circuit for surge suppression are mounted on the compact circuit, and this product can be installed to the DIN rail. This product can make the wiring easily and securely since it also supports terminal block connection.

Model: **VCS02**

5-4 Others

■ Battery set

This is a battery set (including a battery and battery holder) required in the absolute-position backup system.

Model: **BAT01B**

4 AC power input type/ DC power input type Common

This part explains common contents to the AR Series AC power input type and DC power input type.

◆Table of contents

1 Explanation of I/O signals 86
- 1-1 Assignment of direct I/O 86
- 1-2 Assignment of remote I/O 90
- 1-3 Input signals 94
- 1-4 Output signals 100
- 1-5 Sensor inputs 105
- 1-6 General signals (R0 to R15) 106

2 Method of control via I/O 107
- 2-1 Guidance 107
- 2-2 Operation data 111
- 2-3 Parameters 112

3 Operation using the OPX-2A 123
- 3-1 Overview of the **OPX-2A** 123
- 3-2 Names and functions of parts 124
- 3-3 How to read the display 124
- 3-4 **OPX-2A** error display 125
- 3-5 Screen transitions 126
- 3-6 Monitor mode 130
- 3-7 Data mode 131
- 3-8 Parameter mode 134
- 3-9 Test mode 141
- 3-10 Copy mode 143

4 Inspection and maintenance 144
- 4-1 Inspection 144
- 4-2 Warranty 144
- 4-3 Disposal 144

5 Alarms and warnings 145
- 5-1 Alarms 145
- 5-2 Warning 152
- 5-3 Communication errors 153

6 Troubleshooting and remedial actions 154

1 Explanation of I/O signals

In this manual, I/O signals are described as follows.
- Direct I/O: I/O signals accessed via input signals connector (CN8) and output signals connector (CN9)
- Remote I/O: I/O signals accessed via RS-485 communication

Set the following parameters using the **MEXE02**, **OPX-2A** or RS-485 communication.

1-1 Assignment of direct I/O

■ Assignment to the input terminals

The input signals shown below can be assigned to the input terminals IN0 to IN7 of CN8 by setting parameters.
For details on input signals, refer to p.94.

Direct I/O signal name	Initial value
IN0	3: HOME
IN1	4: START
IN2	48: M0
IN3	49: M1

Direct I/O signal name	Initial value
IN4	50: M2
IN5	16: FREE
IN6	18: STOP
IN7	24: ALM-RST

Assignment No.	Signal name	Function
0	No function	Set when the input terminal is not used.
1	FWD	Executes continuous operation in the positive direction.
2	RVS	Executes continuous operation in the negative direction.
3	HOME	Executes return-to-home operation.
4	START	Executes positioning operation.
5	SSTART	Executes sequential positioning operation.
6	+JOG	Executes JOG operation in the positive direction.
7	–JOG	Executes JOG operation in the negative direction.
8	MS0	Executes direct positioning operation.
9	MS1	
10	MS2	
11	MS3	
12	MS4	
13	MS5	
16	FREE	Stops the motor excitation and release the electromagnetic brake.
17	C-ON	Switches the motor excitation between excitation and non-excitation.
18	STOP	Stops of the motor operation.
24	ALM-RST	Resets the current alarm.
25	P-PRESET	Executes position preset.
26	P-CLR	Resets the absolute position error alarm.
27	HMI	Releases of the function limitation of the **MEXE02** or **OPX-2A**.
32	R0	General signals. Use these signals when controlling the system via RS-485 communication.
33	R1	
34	R2	
35	R3	
36	R4	
37	R5	
38	R6	

Assignment No.	Signal name	Function
39	R7	General signals. Use these signals when controlling the system via RS-485 communication.
40	R8	
41	R9	
42	R10	
43	R11	
44	R12	
45	R13	
46	R14	
47	R15	
48	M0	Selects the operation data No. using these six bits.
49	M1	
50	M2	
51	M3	
52	M4	
53	M5	

Related parameters

MEXE02 tree view	Parameter name	Description	Initial value
I/O function [Input]	IN0 input function selection	Assigns the following input signals to IN0 to IN7 of the input terminals. **[Setting range]** Refer to the table below.	3: HOME
	IN1 input function selection		4: START
	IN2 input function selection		48: M0
	IN3 input function selection		49: M1
	IN4 input function selection		50: M2
	IN5 input function selection		16: FREE
	IN6 input function selection		18: STOP
	IN7 input function selection		24: ALM-RST

0: No function	8: MS0	18: STOP	35: R3	43: R11	51: M3
1: FWD	9: MS1	24: ALM-RST	36: R4	44: R12	52: M4
2: RVS	10: MS2	25: P-PRESET	37: R5	45: R13	53: M5
3: HOME	11: MS3	26: P-CLR	38: R6	46: R14	
4: START	12: MS4	27: HMI	39: R7	47: R15	
5: SSTART	13: MS5	32: R0	40: R8	48: M0	
6: +JOG	16: FREE	33: R1	41: R9	49: M1	
7: –JOG	17: C-ON	34: R2	42: R10	50: M2	

memo

- Do not assign the same input signal to multiple input terminals. When the same input signal is assigned to multiple input terminals, the function will be executed if any of the terminals becomes active.
- The ALM-RST input and P-CLR input will be executed when turning from ON to OFF. The P-PRESET input will be executed when turning from OFF to ON.
- When the C-ON input and HMI input are not assigned to the input terminals, these inputs will always be set to ON. When assigning to both direct I/O and remote I/O, the function will be executed when both of them are set to ON.

■ Changing the logic level setting of input signals

You can change the logic level setting for input terminals IN0 to IN7 using the parameter.

Related parameters

MEXE02 tree view	Parameter name	Description	Initial value
I/O function [Input]	IN0 input logic level setting	Changes the logic level setting for input terminals IN0 to IN7. **[Setting range]** 0: Make (N.O.) 1: Brake (N.C.)	0
	IN1 input logic level setting		
	IN2 input logic level setting		
	IN3 input logic level setting		
	IN4 input logic level setting		
	IN5 input logic level setting		
	IN6 input logic level setting		
	IN7 input logic level setting		

■ Assignment to the output terminals

The output signals shown below can be assigned to the output terminals OUT0 to OUT5 of CN9 by setting parameters. For details on output signals, refer to p.100.

Direct I/O signal name	Initial value
OUT0	70: HOME-P
OUT1	69: END
OUT2	73: AREA1

Direct I/O signal name	Initial value
OUT3	67: READY
OUT4	66: WNG
OUT5	65: ALM

Assignment No.	Signal name	Function
0	No function	Sets when the output terminal is not used.
1	FWD_R	Outputs in response to the FWD input.
2	RVS_R	Outputs in response to the RVS input.
3	HOME_R	Outputs in response to the HOME input.
4	START_R	Outputs in response to the START input.
5	SSTART_R	Outputs in response to the SSTART input.
6	+JOG_R	Outputs in response to the +JOG input.
7	–JOG_R	Outputs in response to the –JOG input.
8	MS0_R	Outputs in response to the MS0 to MS5 input.
9	MS1_R	
10	MS2_R	
11	MS3_R	
12	MS4_R	
13	MS5_R	
16	FREE_R	Outputs in response to the FREE input.
17	C-ON_R	Outputs in response to the C-ON input.
18	STOP_R	Outputs in response to the STOP input.
32	R0	Outputs the status of the general signal R0 to R9.
33	R1	
34	R2	
35	R3	
36	R4	
37	R5	
38	R6	
39	R7	
40	R8	
41	R9	

Assignment No.	Signal name	Function
42	R10	Outputs the status of the general signal R10 to R15.
43	R11	
44	R12	
45	R13	
46	R14	
47	R15	
48	M0_R	Outputs in response to the M0 to M5 input.
49	M1_R	
50	M2_R	
51	M3_R	
52	M4_R	
53	M5_R	
60	+LS_R	Outputs in response to the +LS input.
61	–LS_R	Outputs in response to the –LS input.
62	HOMES_R	Outputs in response to the HOMES input.
63	SLIT_R	Outputs in response to the SLIT input.
65	ALM	Outputs the alarm status of the driver (normally closed).
66	WNG	Outputs the warning status of the driver.
67	READY	Outputs when the driver is ready.
68	MOVE	Outputs when the motor operates.
69	END	Outputs when the positioning operation is completed.
70	HOME-P	Outputs when the motor is in home position.
71	TLC	Outputs when the load is outside of the motor torque range.
72	TIM	Outputs once every 7.2° rotation of the motor output shaft.
73	AREA1	Outputs when the motor is within the area 1.
74	AREA2	Outputs when the motor is within the area 2.
75	AREA3	Outputs when the motor is within the area 3.
80	S-BSY	Outputs when the driver is in internal processing state.
82	MPS *	Outputs the ON-OFF state of the main power supply.

* AC power input only

Related parameters

MEXE02 tree view	Parameter name	Description	Initial value
I/O function [Output]	OUT0 output function selection	Assigns the following output signals to OUT0 to OUT5 of the output terminals. **[Setting range]** Refer to the table below.	70: HOME-P
	OUT1 output function selection		69: END
	OUT2 output function selection		73: AREA1
	OUT3 output function selection		67: READY
	OUT4 output function selection		66: WNG
	OUT5 output function selection		65: ALM

0: No function	10: MS2_R	35: R3	45: R13	61: –LS_R	72: TIM
1: FWD_R	11: MS3_R	36: R4	46: R14	62: HOMES_R	73: AREA1
2: RVS_R	12: MS4_R	37: R5	47: R15	63: SLIT_R	74: AREA2
3: HOME_R	13: MS5_R	38: R6	48: M0_R	65: ALM	75: AREA3
4: START_R	16: FREE_R	39: R7	49: M1_R	66: WNG	80: S-BSY
5: SSTART_R	17: C-ON_R	40: R8	50: M2_R	67: READY	82: MPS *
6: +JOG_R	18: STOP_R	41: R9	51: M3_R	68: MOVE	
7: –JOG_R	32: R0	42: R10	52: M4_R	69: END	
8: MS0_R	33: R1	43: R11	53: M5_R	70: HOME-P	
9: MS1_R	34: R2	44: R12	60: +LS_R	71: TLC	

* AC power input only

1-2 Assignment of remote I/O

Assign the I/O function via RS-485 communication.

■ Assignment of input signals

The input signals shown below can be assigned to the NET-IN0 to NET-IN15 of the remote I/O by setting parameters. See each command description for the assignment of the NET-IN0 to NET-IN15.

Assignment No.	Signal name	Function	Setting range
0	No function	Sets when the input terminal is not used.	–
1	FWD	Executes continuous operation in the positive direction.	0: Deceleration stop 1: Operation
2	RVS	Executes continuous operation in the negative direction.	
3	HOME	Executes return-to-home operation.	0: No operation 1: Start operation
4	START	Executes positioning operation.	
5	SSTART	Executes sequential positioning operation.	
6	+JOG	Executes JOG operation in the positive direction.	
7	–JOG	Executes JOG operation in the negative direction.	
8	MS0	Executes direct positioning operation of the operation data No. set by the I/O parameter.	
9	MS1		
10	MS2		
11	MS3		
12	MS4		
13	MS5		
16	FREE	Stops the motor excitation and release the electromagnetic brake.	0: No operation 1: Electromagnetic brake release+motor non-excitation
17	C-ON	Switches the motor excitation between excitation and non-excitation.	0: Motor non-excitation 1: Motor excitation
18	STOP	Stops of the motor operation.	0: No operation 1: Stop operation
24	ALM-RST *	Resets the current alarm.	0: No operation 1: Reset alarm
25	P-PRESET *	Executes position preset.	0: No operation 1: Execute preset
26	P-CLR *	Resets the absolute position error alarm.	0: No operation 1: Reset alarm
27	HMI	Releases of the function limitation of the **MEXE02** or **OPX-2A**	0: Function limitation 1: Function limitation release
32	R0	General signals. Use these signals when controlling the system via RS-485 communication.	0: OFF 1: ON
33	R1		
34	R2		
35	R3		
36	R4		
37	R5		
38	R6		
39	R7		
40	R8		
41	R9		
42	R10		

Assignment No.	Signal name	Function	Setting range
43	R11	General signals. Use these signals when controlling the system via RS-485 communication.	0: OFF 1: ON
44	R12		
45	R13		
46	R14		
47	R15		
48	M0	Selects the operation data No. using these six bits. See p.95 for details on the combination.	0: OFF 1: ON (Operation data No.0 to 63 can be selected.)
49	M1		
50	M2		
51	M3		
52	M4		
53	M5		

* It cannot be set in the driver that is before the specification change. Refer to p.7 for details.

Related parameters

MEXE02 tree view	Parameter name	Description	Initial value
I/O function [RS-485]	NET-IN0 input function selection	Assigns the following input signals to NET-IN0 to NET-IN15. **[Setting range]** Refer to the table below.	48: M0
	NET-IN1 input function selection		49: M1
	NET-IN2 input function selection		50: M2
	NET-IN3 input function selection		4: START
	NET-IN4 input function selection		3: HOME
	NET-IN5 input function selection		18: STOP
	NET-IN6 input function selection		16: FREE
	NET-IN7 input function selection		0: No function
	NET-IN8 input function selection		8: MS0
	NET-IN9 input function selection		9: MS1
	NET-IN10 input function selection		10: MS2
	NET-IN11 input function selection		5: SSTART
	NET-IN12 input function selection		6: +JOG
	NET-IN13 input function selection		7: –JOG
	NET-IN14 input function selection		1: FWD
	NET-IN15 input function selection		2: RVS

0: No function	7: –JOG	16: FREE	32: R0	39: R7	46: R14
1: FWD	8: MS0	17: C-ON	33: R1	40: R8	47: R15
2: RVS	9: MS1	18: STOP	34: R2	41: R9	48: M0
3: HOME	10: MS2	24: ALM-RST *	35: R3	42: R10	49: M1
4: START	11: MS3	25: P-PRESET *	36: R4	43: R11	50: M2
5: SSTART	12: MS4	26: P-CLR *	37: R5	44: R12	51: M3
6: +JOG	13: MS5	27: HMI	38: R6	45: R13	52: M4
					53: M5

* These three signals cannot be set in the driver which is before the specification change. Refer to p.7 for details.

memo

- Do not assign the same input signal to multiple input terminals. When the same input signal is assigned to multiple input terminals, the function will be executed if any of the terminals becomes active.
- The ALM-RST input and P-CLR input will be executed when turning from ON to OFF. The P-PRESET input will be executed when turning from OFF to ON.
- When the C-ON input and HMI input are not assigned to the input terminals, these inputs will always be set to ON. When assigning to both direct I/O and remote I/O, the function will be executed when both of them are set to ON.

■ Assignment to the output terminals

The output signals shown below can be assigned to the NET-OUT0 to NET-OUT15 of the remote I/O by setting parameters. See each command description for the assignment of the NET-OUT0 to NET-OUT15.

Assignment No.	Signal name	Function	Data read
0	No function	Sets when the output terminal is not used.	–
1	FWD_R	Outputs in response to the FWD input.	0: OFF 1: ON
2	RVS_R	Outputs in response to the RVS input.	
3	HOME_R	Outputs in response to the HOME input.	
4	START_R	Outputs in response to the START input.	
5	SSTART_R	Outputs in response to the SSTART input.	
6	+JOG_R	Outputs in response to the +JOG input.	
7	–JOG_R	Outputs in response to the –JOG input.	
8	MS0_R	Outputs in response to the MS0 input.	
9	MS1_R	Outputs in response to the MS1 input.	
10	MS2_R	Outputs in response to the MS2 input.	
11	MS3_R	Outputs in response to the MS3 input.	
12	MS4_R	Outputs in response to the MS4 input.	
13	MS5_R	Outputs in response to the MS5 input.	
16	FREE_R	Outputs in response to the FREE input.	
17	C-ON_R	Outputs in response to the C-ON input.	
18	STOP_R	Outputs in response to the STOP input.	
32	R0	Outputs the status of the general signal R0 to R15.	
33	R1		
34	R2		
35	R3		
36	R4		
37	R5		
38	R6		
39	R7		
40	R8		
41	R9		
42	R10		
43	R11		
44	R12		
45	R13		
46	R14		
47	R15		
48	M0_R	Outputs in response to the M0 to M5 input.	
49	M1_R		
50	M2_R		
51	M3_R		
52	M4_R		
53	M5_R		
60	+LS_R	Outputs in response to the +LS input.	
61	–LS_R	Outputs in response to the –LS input.	
62	HOMES_R	Outputs in response to the HOMES input.	
63	SLIT_R	Outputs in response to the SLIT input.	
65	ALM	Outputs the alarm status of the driver (normally open).	0: Alarm not present 1: Alarm present

Assignment No.	Signal name	Function	Data read
66	WNG	Outputs the warning status of the driver.	0: Warning not present 1: Warning present
67	READY	Outputs when the driver is ready.	0: Not ready 1: Ready
68	MOVE	Outputs when the motor operates.	0: Motor stopped 1: Motor operating
69	END	Outputs when the positioning operation is completed.	0: Motor operating 1: Motor operating completion
70	HOME-P	Outputs when the motor is in home position.	0: Not home position 1: Home position
71	TLC	Outputs when the load is outside of the motor torque range.	0: Inside torque range 1: Outside torque range
72	TIM	Outputs once every 7.2° rotation of the motor output shaft.	0: OFF 1: ON
73	AREA1	Outputs when the motor is within the area 1.	0: Outside area 1: Inside area
74	AREA2	Outputs when the motor is within the area 2.	
75	AREA3	Outputs when the motor is within the area 3.	
80	S-BSY	Outputs when the driver is in internal processing state.	0: OFF 1: ON
82	MPS *	Outputs the ON-OFF state of the main power supply.	

* AC power input only

Related parameters

MEXE02 tree view	Parameter name	Description	Initial value
I/O function [RS-485]	NET-OUT0 output function selection	Assigns the following output signals to NET-OUT0 to NET-OUT15. **[Setting range]** Refer to the table below.	48: M0_R
	NET-OUT1 output function selection		49: M1_R
	NET-OUT2 output function selection		50: M2_R
	NET-OUT3 output function selection		4: START_R
	NET-OUT4 output function selection		70: HOME-P
	NET-OUT5 output function selection		67: READY
	NET-OUT6 output function selection		66: WNG
	NET-OUT7 output function selection		65: ALM
	NET-OUT8 output function selection		80: S-BSY
	NET-OUT9 output function selection		73: AREA1
	NET-OUT10 output function selection		74: AREA2
	NET-OUT11 output function selection		75: AREA3
	NET-OUT12 output function selection		72: TIM
	NET-OUT13 output function selection		68: MOVE
	NET-OUT14 output function selection		69: END
	NET-OUT15 output function selection		71: TLC

0: No function	10: MS2_R	35: R3	45: R13	61: –LS_R	72: TIM
1: FWD_R	11: MS3_R	36: R4	46: R14	62: HOMES_R	73: AREA1
2: RVS_R	12: MS4_R	37: R5	47: R15	63: SLIT_R	74: AREA2
3: HOME_R	13: MS5_R	38: R6	48: M0_R	65: ALM	75: AREA3
4: START_R	16: FREE_R	39: R7	49: M1_R	66: WNG	80: S-BSY
5: SSTART_R	17: C-ON_R	40: R8	50: M2_R	67: READY	82: MPS *
6: +JOG_R	18: STOP_R	41: R9	51: M3_R	68: MOVE	
7: –JOG_R	32: R0	42: R10	52: M4_R	69: END	
8: MS0_R	33: R1	43: R11	53: M5_R	70: HOME-P	
9: MS1_R	34: R2	44: R12	60: +LS_R	71: TLC	

* AC power input only

1-3 Input signals

All input signals of the driver are photocoupler inputs.

- Direct I/O .....I/O for normally open: "ON: Current-carrying", "OFF: Not current-carrying"
  I/O for normally closed: "ON: Not current-carrying", "OFF: Current-carrying"
- Remote I/O......"ON: 1", "OFF: 0"

■ Internal input circuit

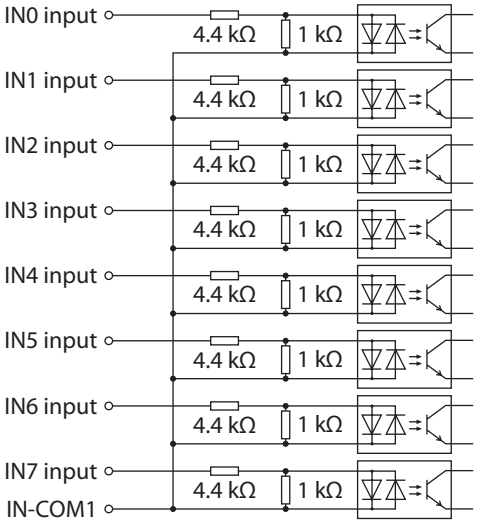

■ M0 to M5 inputs

Select a desired operation data number for positioning operation or continuous operation based on the combination of ON/OFF states of the M0 to M5 inputs.

Operation data No.	M5	M4	M3	M2	M1	M0
0	OFF	OFF	OFF	OFF	OFF	OFF
1	OFF	OFF	OFF	OFF	OFF	**ON**
2	OFF	OFF	OFF	OFF	**ON**	OFF
3	OFF	OFF	OFF	OFF	**ON**	**ON**
4	OFF	OFF	OFF	**ON**	OFF	OFF
5	OFF	OFF	OFF	**ON**	OFF	**ON**
6	OFF	OFF	OFF	**ON**	**ON**	OFF
7	OFF	OFF	OFF	**ON**	**ON**	**ON**
8	OFF	OFF	**ON**	OFF	OFF	OFF
9	OFF	OFF	**ON**	OFF	OFF	**ON**
10	OFF	OFF	**ON**	OFF	**ON**	OFF
11	OFF	OFF	**ON**	OFF	**ON**	**ON**
12	OFF	OFF	**ON**	**ON**	OFF	OFF
13	OFF	OFF	**ON**	**ON**	OFF	**ON**
14	OFF	OFF	**ON**	**ON**	**ON**	OFF
15	OFF	OFF	**ON**	**ON**	**ON**	**ON**
16	OFF	**ON**	OFF	OFF	OFF	OFF
17	OFF	**ON**	OFF	OFF	OFF	**ON**
18	OFF	**ON**	OFF	OFF	**ON**	OFF
19	OFF	**ON**	OFF	OFF	**ON**	**ON**
20	OFF	**ON**	OFF	**ON**	OFF	OFF
21	OFF	**ON**	OFF	**ON**	OFF	**ON**
22	OFF	**ON**	OFF	**ON**	**ON**	OFF
23	OFF	**ON**	OFF	**ON**	**ON**	**ON**
24	OFF	**ON**	**ON**	OFF	OFF	OFF
25	OFF	**ON**	**ON**	OFF	OFF	**ON**
26	OFF	**ON**	**ON**	OFF	**ON**	OFF
27	OFF	**ON**	**ON**	OFF	**ON**	**ON**
28	OFF	**ON**	**ON**	**ON**	OFF	OFF
29	OFF	**ON**	**ON**	**ON**	OFF	**ON**
30	OFF	**ON**	**ON**	**ON**	**ON**	OFF
31	OFF	**ON**	**ON**	**ON**	**ON**	**ON**

Operation data No.	M5	M4	M3	M2	M1	M0
32	**ON**	OFF	OFF	OFF	OFF	OFF
33	**ON**	OFF	OFF	OFF	OFF	**ON**
34	**ON**	OFF	OFF	OFF	**ON**	OFF
35	**ON**	OFF	OFF	OFF	**ON**	**ON**
36	**ON**	OFF	OFF	**ON**	OFF	OFF
37	**ON**	OFF	OFF	**ON**	OFF	**ON**
38	**ON**	OFF	OFF	**ON**	**ON**	OFF
39	**ON**	OFF	OFF	**ON**	**ON**	**ON**
40	**ON**	OFF	**ON**	OFF	OFF	OFF
41	**ON**	OFF	**ON**	OFF	OFF	**ON**
42	**ON**	OFF	**ON**	OFF	**ON**	OFF
43	**ON**	OFF	**ON**	OFF	**ON**	**ON**
44	**ON**	OFF	**ON**	**ON**	OFF	OFF
45	**ON**	OFF	**ON**	**ON**	OFF	**ON**
46	**ON**	OFF	**ON**	**ON**	**ON**	OFF
47	**ON**	OFF	**ON**	**ON**	**ON**	**ON**
48	**ON**	**ON**	OFF	OFF	OFF	OFF
49	**ON**	**ON**	OFF	OFF	OFF	**ON**
50	**ON**	**ON**	OFF	OFF	**ON**	OFF
51	**ON**	**ON**	OFF	OFF	**ON**	**ON**
52	**ON**	**ON**	OFF	**ON**	OFF	OFF
53	**ON**	**ON**	OFF	**ON**	OFF	**ON**
54	**ON**	**ON**	OFF	**ON**	**ON**	OFF
55	**ON**	**ON**	OFF	**ON**	**ON**	**ON**
56	**ON**	**ON**	**ON**	OFF	OFF	OFF
57	**ON**	**ON**	**ON**	OFF	OFF	**ON**
58	**ON**	**ON**	**ON**	OFF	**ON**	OFF
59	**ON**	**ON**	**ON**	OFF	**ON**	**ON**
60	**ON**	**ON**	**ON**	**ON**	OFF	OFF
61	**ON**	**ON**	**ON**	**ON**	OFF	**ON**
62	**ON**	**ON**	**ON**	**ON**	**ON**	OFF
63	**ON**	**ON**	**ON**	**ON**	**ON**	**ON**

■ START input

This signal starts the positioning operation.
Select the operation data No. and turn the START input to ON to start positioning operation.

Related parameters

MEXE02 tree view	Parameter name	Description	Initial value
Alarm	Return-to-home incomplete alarm	When the positioning operation is started while the position origin has not been set, selects whether the alarm generates or not. **[Setting range]** 0: Disable 1: Enable	0

■ SSTART input

This signal starts the sequential positioning operation. (p.172)
Positioning operation based on the next operation data No. will be performed every time the SSTART input turns ON. This function is useful when multiple positioning operations must be performed sequentially, because there is no need to repeatedly select each operation data No.

Related parameters

MEXE02 tree view	Parameter name	Description	Initial value
Alarm	Return-to-home incomplete alarm	When the positioning operation is started while the position origin has not been set, selects whether the alarm generates or not. **[Setting range]** 0: Disable 1: Enable	0

■ MS0 to MS5 input

This signal starts the direct positioning operation. (p.171)
When any of the MS0 to MS5 inputs is turned ON, the positioning operation corresponding to the input data No. will be performed. Since the positioning operation is enabled by turning any of the MS0 to MS5 inputs ON, you can save the steps of selecting the operation data No.

Related parameters

MEXE02 tree view	Parameter name	Description	Initial value
Alarm	Return-to-home incomplete alarm	When the positioning operation is started while the position origin has not been set, selects whether the alarm generates or not. **[Setting range]** 0: Disable 1: Enable	0
I/O	MS0 operation No. selection	Sets operation data No. corresponding to MS0 to MS5 input. **[Setting range]** Operation data No.0 to 63	0
	MS1 operation No. selection		1
	MS2 operation No. selection		2
	MS3 operation No. selection		3
	MS4 operation No. selection		4
	MS5 operation No. selection		5

■ HOME input

This signal starts the return-to-home operation. (p.182)
Turn the HOME input ON to start return-to-home operation. When the return-to-home operation is completed and the motor stops, the HOME-P output turns ON.

Related parameters

MEXE02 tree view	Parameter name	Description	Initial value
Home operation	Home-seeking mode	Sets the mode for return-to-home operation. **[Setting range]** 0: 2-sensor mode 1: 3-sensor mode 2: Push mode	1
	Operating speed of home-seeking	Sets the operating speed for return-to-home operation. **[Setting range]** 1 to 1,000,000 Hz	1000

MEXE02 tree view	Parameter name	Description	Initial value
Home operation	Acceleration/ deceleration of home-seeking	Sets the acceleration/deceleration rate (acceleration/deceleration time) for return-to-home operation. **[Setting range]** 1 to 1,000,000 (1=0.001 ms/kHz or 1=0.001 s)	1000
	Starting speed of home-seeking	Sets the starting speed for return-to-home operation. **[Setting range]** 1 to 1,000,000 Hz	500
	Position offset of home-seeking	Sets the amount of offset from mechanical home. **[Setting range]** –8,388,608 to 8,388,607 step	0
	Starting direction of home-seeking	Sets the starting direction for home detection. **[Setting range]** 0: Negative direction 1: Positive direction	1
	SLIT detection with home-seeking	Sets whether or not to concurrently use the SLIT input for return-to-home operation. 0: Disable 1: Enable	0
	TIM signal detection with home-seeking	Sets whether or not to concurrently use the TIM signal for return-to-home operation. **[Setting range]** 0: Disable 1: Enable	0
	Operating current of home-seeking with push-motion	Sets the operating current, based on the rated current being 100%, for push-motion return-to-home operation. **[Setting range]** 0 to 1000 (1=0.1%)	1000

■ FWD input, RVS input

These signals start the continuous operation. (p.190)
Operation is performed based on the FWD or RVS input and the operating speed corresponding to the selected operation data No.
Turn the FWD signal to ON, to perform continuous operation in the positive direction.
Turn the RVS signal to ON, to perform continuous operation in the negative direction.
If the signal of the same direction is turned ON again during deceleration, the motor will accelerate and continue operating.
If the FWD and RVS inputs are turned ON simultaneously, the motor will decelerate to a stop.
When the operation data No. is changed during continuous operation, the speed will change to the one specified for the new operation data No.

■ +JOG input, −JOG input

These signals start the JOG operation. (p.195)
Turn the +JOG signal to ON, to perform JOG operation in the positive direction.
Turn the −JOG signal to ON, to perform JOG operation in the negative direction.

Related parameters

MEXE02 tree view	Parameter name	Description	Initial value
Operation	JOG travel amount	Sets the travel amount for JOG operation. **[Setting range]** 1 to 8,388,607 step	1
	JOG operating speed	Sets the operating speed for JOG operation. **[Setting range]** 1 to 1,000,000 Hz	1000
	Acceleration/ deceleration rate of JOG	Sets the acceleration/deceleration rate (acceleration/deceleration time) for JOG operation. **[Setting range]** 1 to 1,000,000 (1=0.001 ms/kHz or 1=0.001 s)	1000
	JOG starting speed	Sets the starting speed for JOG operation. **[Setting range]** 0 to 1,000,000 Hz	500

■ STOP input

When the STOP input turns ON, the motor will stop.
When the STOP input turns ON while a positioning operation is being performed, the balance of the travel amount will be cleared. See p.198 for stop action.

Related parameters

MEXE02 tree view	Parameter name	Description	Initial value
I/O	STOP input action	Sets how the motor should stop when a STOP input is turned ON. **[Setting range]** 0: Immediate stop 1: Deceleration stop 2: Immediate stop & Current OFF 3: Deceleration stop & Current OFF	1

■ C-ON input

This signal is used to excite the motor.
The motor will be excited when the C-ON input is ON, while the motor will become non-excitation status when the C-ON input is OFF.
When an electromagnetic brake motor is used, the electromagnetic brake will be released after the motor is excited.

memo When the C-ON input is not assigned to the direct I/O or remote I/O, this input will always be set to ON. When assigning to both direct I/O and remote I/O, the function will be executed when both of them are set to ON.

■ FREE input

When the FREE input is turned ON, the motor current will be cut off. The motor will lose its holding torque, and the output shaft can be turned manually. When an electromagnetic brake motor is used, the electromagnetic brake will also be released.

Note Do not turn the FREE input ON when driving a vertical load. Since the motor loses its holding torque, the load may drop.

Relations among the status of the FREE input, the C-ON input and the motor output shaft are shown in the tables below.

Motor without an electromagnetic brake

C-ON input / FREE input	OFF	ON
OFF	Output shaft is in a released state	Holds output shaft by motor excitation
ON	Output shaft is in a released state	Output shaft is in a released state

Motor with an electromagnetic brake

C-ON input / FREE input	OFF	ON
OFF	Holds output shaft by electromagnetic brake	Holds output shaft by motor excitation
ON	Output shaft is in a released state	Output shaft is in a released state

■ P-PRESET input

This is a signal for the command position preset.
When the P-PRESET input is turned ON, the command position is set as the value of the "preset position" parameter. (This signal will become effective when turning from OFF to ON.)
However, the preset will not execute in the following conditions.

- When an alarm is present.
- When the motor is operating.

Related parameters

MEXE02 tree view	Parameter name	Description	Initial value
Coordinates	Preset position	Sets the preset position. **[Setting range]** –8,388,608 to 8,388,607 step	0

■ ALM-RST input

When an alarm generates, the motor will stop. When the ALM-RST input is turned from ON to OFF, the alarm will be reset. (The alarm will be reset at the OFF edge of the ALM-RST input.) Always reset an alarm after removing the cause of the alarm and after ensuring safety.
Note that some alarms cannot be reset with the ALM-RST input. See p.145 for alarm descriptions.

■ P-CLR input

If the P-CLR input is turned from ON to OFF while an absolute position error alarm is generated, the alarm will be reset. (The alarm will be reset at the OFF edge of the P-CLR input.)
The P-CLR input can reset the absolute position error alarm only.

■ HMI input

When the HMI input is turned ON, the function limitation of the **MEXE02** or **OPX-2A** will be released.
When the HMI input is turned OFF, the function limitation will be imposed.
The following functions will be limited to execute.

- I/O test
- Test operation
- Teaching
- Parameters setting, writing, downloading, initializing
- Data setting, clearing, initializing

memo When the HMI input is not assigned to the input terminal, this input will always be set to ON. When assigning to both direct I/O and remote I/O, the function will be executed when both of them are set to ON.

1-4 Output signals

The output signals of the driver are photocoupler/open-collector output.

- Direct I/O .....I/O for normally open: "ON: Current-carrying", "OFF: Not current-carrying"
  I/O for normally closed: "ON: Not current-carrying", "OFF: Current-carrying"
- Remote I/O......"ON: 1", "OFF: 0"

■ Internal output circuit

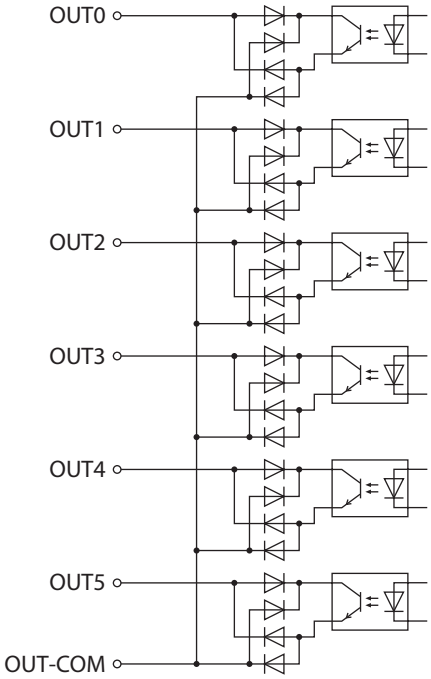

■ ALM output

See p.145 for alarm descriptions.

● **Direct I/O**

When an alarm generates, the ALM output will turn OFF. At the same time, the ALM LED (or ALARM LED) of the driver will blink and the motor current will be cut off and stop. The ALM output is normally closed.

● **Remote I/O**

When an alarm generates, the ALM output will turn ON. At the same time, the ALM LED (or ALARM LED) of the driver will blink and the motor current will be cut off and stop. The ALM output is normally open.

● **Related parameters**

MEXE02 tree view	Parameter name	Description	Initial value
Alarm	Overload alarm	Sets the condition that an overload alarm generates. **[Setting range]** 1 to 300 (1=0.1 s)	50
	Excessive position deviation alarm at current ON	Sets the condition that an excessive position deviation alarm generates when the motor is in a state of current ON. **[Setting range]** 1 to 30000 (1=0.01 rev)	300
	Return-to-home incomplete alarm	When the positioning operation is started while the position origin has not been set, selects whether the alarm generates or not. **[Setting range]** 0: Disable 1: Enable	0

MEXE02 tree view	Parameter name	Description	Initial value
Alarm	Excessive position deviation alarm at current OFF	Sets the condition that an excessive position deviation alarm generates when the motor is in a state of current OFF. If the position deviation exceeds the setting value in the "excessive position deviation alarm at current ON" parameter, the excessive position deviation warning at current OFF generates. In addition, if the C-ON input is turned ON, the excessive position deviation alarm at current OFF generates. **[Setting range]** 1 to 30000 (1=0.01 rev)	10000
Communication	Communication timeout	Sets the condition in which a communication timeout occurs in RS-485 communication. It is not monitored when the set value is 0. **[Setting range]** 0: Not monitored 1 to 10000 ms	0
	Communication error alarm	Sets the condition in which a RS-485 communication error alarm generates. A communication error alarm generates after a RS-485 communication error has occurred by the number of times set here. **[Setting range]** 1 to 10 times	3

■ WNG output

When a warning generates, the WNG output turns ON. See p.152 for warning descriptions.

Related parameters

MEXE02 tree view	Parameter name	Description	Initial value
Warning	Overheat warning	Sets the condition that a main circuit overheat warning generates. **[Setting range]** 40 to 85 °C	85
	Overload warning	Sets the condition that an overload warning generates. **[Setting range]** 1 to 300 (1=0.1 s)	50
	Overspeed warning	Sets the condition that an overspeed warning generates. **[Setting range]** 1 to 5000 r/min	4500
	Overvoltage warning	Sets the condition that an overvoltage warning generates. **[Setting range]** AC power input: 120 to 450 V DC power input: 150 to 630 V (1=0.1 V)	AC power input: 435 DC power input: 630
	Undervoltage warning	Sets the condition that an undervoltage warning generates. **[Setting range]** AC power input: 120 to 280 V DC power input: 150 to 630 V (1=0.1 V)	AC power input: 120 DC power input: 180
	Excessive position deviation warning at current ON	Sets the condition that an excessive position deviation warning generates when the motor is in a state of current ON. **[Setting range]** 1 to 30000 (1=0.01 rev)	300

■ READY output

When the driver becomes ready, the READY output turns ON. Input operating commands to the driver after the READY output has turned ON.
The READY output turns ON when all of the following conditions are satisfied.

- The driver main power supply is turned ON.
- All inputs which start operation are OFF
- The FREE input is OFF
- The C-ON input is ON (When the C-ON input is assigned)
- The STOP input is OFF
- An alarm is not present.
- The motor is not operating.
- Test function, downloading or teaching function was not performed using the **MEXE02**.
- Test operation, downloading, initializing or teaching function was not performed using the **OPX-2A**.
- Configuration commands, all data initialization commands and batch non-volatile memory read commands are not executed via RS-485 communication.

■ HOME-P output

The HOME-P output turns ON corresponding to the setting of the "HOME-P output function selection" parameter. See p.200 for setting the position origin.

● When "HOME-P output function selection" parameter is set to "home output"

When the command position of the driver is in the home-position while the MOVE output is OFF, the HOME-P output will turn ON. However, the HOME-P output remains OFF when the position origin for the driver has not been set.

● When "HOME-P output function selection" parameter is set to "return-to-home complete output"

Regardless of the command position by the driver, if the position origin for the driver is set, the HOME-P output will turn ON. Therefore, it turns ON after completing the return-to-home operation or preset.
Once the HOME-P output turns ON, it will not turn OFF until the motor has moved from the position origin.

memo When a battery is used, it is charged while the DC power supply is being ON. If the battery runs down or the data retention period passes over in a state where the DC power supply is OFF, the position coordinate will be an unset state (the position origin has been lost).

● Related parameters

MEXE02 tree view	Parameter name	Description	Initial value
I/O	HOME-P output function selection	Sets the timing to output the HOME-P output. [**Setting range**] 0: Home output 1: Return-to-home complete output	0

■ MOVE output

The MOVE output turns ON while the motor is operating.

Related parameters

MEXE02 tree view	Parameter name	Description	Initial value
I/O	Minimum ON time for MOVE output	Sets the minimum ON time for MOVE output. [**Setting range**] 0 to 255 ms	0

■ END output

When the motor has completed its movement, the END output will turn ON. When the motor was converged in a position of the "END signal range" parameter against the command position while the MOVE output is in an OFF status, the END output turns ON.

Related parameters

MEXE02 tree view	Parameter name	Description	Initial value
I/O	END signal range	Sets the output range of the END signal (the motor operation converges within this angular range). **[Setting range]** 0 to 180 (1=0.1°)	18
	Positioning complete output offset	Sets the offset for the END signal (the offset for converging angular range). **[Setting range]** −18 to 18 (1=0.1°)	0

■ TLC output

When the load exceeds the motor torque range, the TLC output will turn ON.
When performing push-motion operation, if the load exceeds the torque range calculated from the current ratio of push-motion operation, the TLC output will turn ON.
This output can be used for the completion signal of the push-motion operation.

■ AREA1 to AREA3 outputs

The AREA output turns ON when the motor is inside the area set by the parameters.
It turns ON when the motor is inside the area even when the motor stops.

Related parameters

MEXE02 tree view	Parameter name	Description	Initial value
I/O	AREA1 positive direction position	Sets the AREA1 to AREA3 positive direction position. **[Setting range]** −8,388,608 to 8,388,607 step	0
	AREA2 positive direction position		
	AREA3 positive direction position		
	AREA1 negative direction position	Sets the AREA1 to AREA3 negative direction position. **[Setting range]** −8,388,608 to 8,388,607 step	0
	AREA2 negative direction position		
	AREA3 negative direction position		

- **When the "AREA positive direction position" parameter < "AREA negative direction position" parameter**

To turn the AREA output ON:
Motor position ≤ AREA positive direction position, or
Motor position ≥ AREA negative direction position

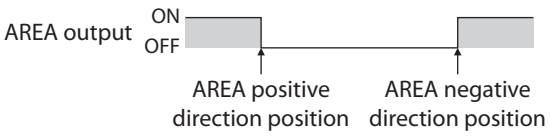

- **When the "AREA positive direction position" parameter > "AREA negative direction position" parameter**

To turn the AREA output ON:
AREA negative direction position ≤ Motor position ≤ AREA positive direction position

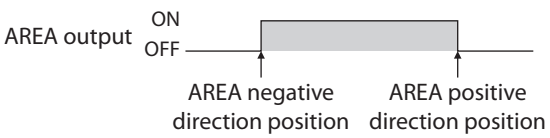

- **When the "AREA positive direction position" parameter = "AREA negative direction position" parameter**

To turn the AREA output ON:
Motor position = AREA negative direction position = AREA positive direction position

memo When using AREA1 to AREA3 output to confirm the motor position, you can use two types - the command position and the actual position.
AREA1 and AREA2: Command position
AREA3: Actual position

■ TIM output

The TIM output will turn ON every time the motor output shaft rotates by 7.2°.
If the command speed is faster than 30 r/min, TIM output will not be output correctly.

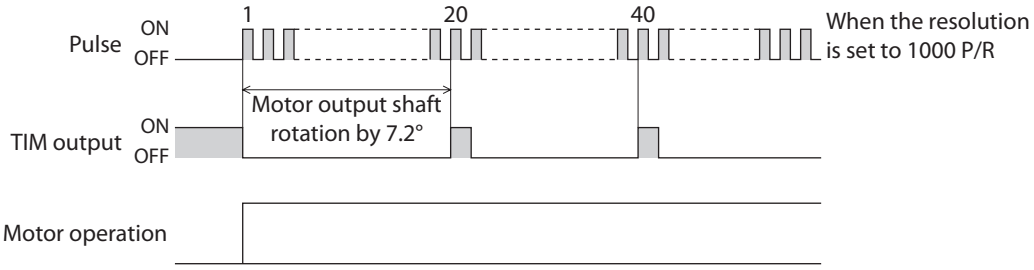

memo The TIM output is a signal that is output for 50 times per revolution of the motor output shaft. When the TIM output is used, set the resolution to be an integral multiple of 50 using the "electronic gear" parameters.

■ S-BSY output

The S-BSY output turns ON while internal processing of the driver is being executed.
In the following condition, the driver will be in an internal processing status.

- Issuing maintenance commands via RS-485 communication

■ MPS output (AC power input only)

The MPS output turns ON when the driver main power is ON.

■ Response output

The response output is the output signal that shows the ON/OFF status corresponding to the input signals.
The following tables show the correspondence between the input signals and output signals.

Input signal	Output signal
FWD	FWD_R
RVS	RVS_R
HOME	HOME_R
START	START_R
SSTART	SSTART_R
+JOG	+JOG_R
−JOG	−JOG_R
MS0	MS0_R
MS1	MS1_R

Input signal	Output signal
MS2	MS2_R
MS3	MS3_R
MS4	MS4_R
MS5	MS5_R
FREE	FREE_R
C-ON	C-ON_R
STOP	STOP_R
M0	M0_R
M1	M1_R

Input signal	Output signal
M2	M2_R
M3	M3_R
M4	M4_R
M5	M5_R
+LS	+LS_R
−LS	−LS_R
HOMES	HOMES_R
SLIT	SLIT_R

memo The response output is the output signal to return the status of the input signal. Therefore, the output signals corresponding to the input signals for motor operation (START_R output etc.) do not show the movement of the motor itself.

1-5 Sensor inputs

■ Internal input circuit

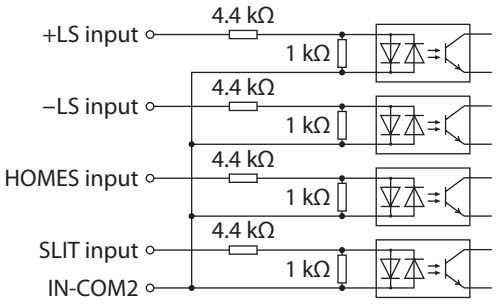

■ +LS input, −LS input

These signals are input from the applicable limit sensors. The +LS input is for the +side sensor and the −LS input is for the −side sensor.

- Return-to-home operation .....When the +LS or −LS input is detected, perform the return-to-home operation according to the setting of the "home-seeking mode" parameter.
- Any other operation .....Detect the hardware overtravel and stop the motor. See p.198 for hardware overtravel.

Related parameters

MEXE02 tree view	Parameter name	Description	Initial value
I/O	Hardware overtravel	Sets whether to enable or disable hardware overtravel detection using ±LS inputs. **[Setting range]** 0: Disable 1: Enable	1
	Overtravel action	Sets the motor stop action to take place upon the occurrence of overtravel. **[Setting range]** 0: Immediate stop 1: Decelerate stop	0
	LS contact configuration	Sets the ±LS input logics. **[Setting range]** 0: Make (N.O.) 1: Brake (N.C.)	0

■ HOMES input

The HOMES input is the input for the mechanical home sensor when setting the "home-seeking mode" parameter to the 3-sensor mode. See p.182 for return-to-home operation.

Related parameters

MEXE02 tree view	Parameter name	Description	Initial value
I/O	HOMES logic level	Sets the HOMES input logic. **[Setting range]** 0: Make (N.O.) 1: Brake (N.C.)	0

■ SLIT input

Connect the SLIT input when using motorized linear slides equipped with a slit.
When detecting the home, use of the SLIT input in addition to the HOMES will increase the accuracy of home detection. See p.182 for return-to-home operation.

Related parameters

MEXE02 tree view	Parameter name	Description	Initial value
I/O	SLIT logic level	Sets the SLIT input logic. **[Setting range]** 0: Make (N.O.) 1: Brake (N.C.)	0

1-6 General signals (R0 to R15)

R0 to R15 are general signals that enable control via RS-485 communication.
Using R0 to R15, I/O signals for the external device can be controlled by the master controller via the driver.
The direct I/O of the driver can be used as an I/O unit.
See the following example for setting of the general signals.

- **When outputting the signals from the master controller to the external device**

  Assign the general signal R0 to the OUT0 output and NET-IN0.
  When setting the NET-IN0 to 1, the OUT0 output turns ON. When setting the NET-IN0 to 0, the OUT0 output turns OFF.

- **When inputting the output of the external device to the master controller**

  Assign the general signal R1 to the IN7 input and NET-OUT15.
  When turning the IN7 input ON by the external device, the NET-OUT15 becomes 1. When turning the IN7 input OFF, the NET-OUT15 becomes 0. The logic level of the IN7 input can be set using "IN7 input logic level setting" parameter.

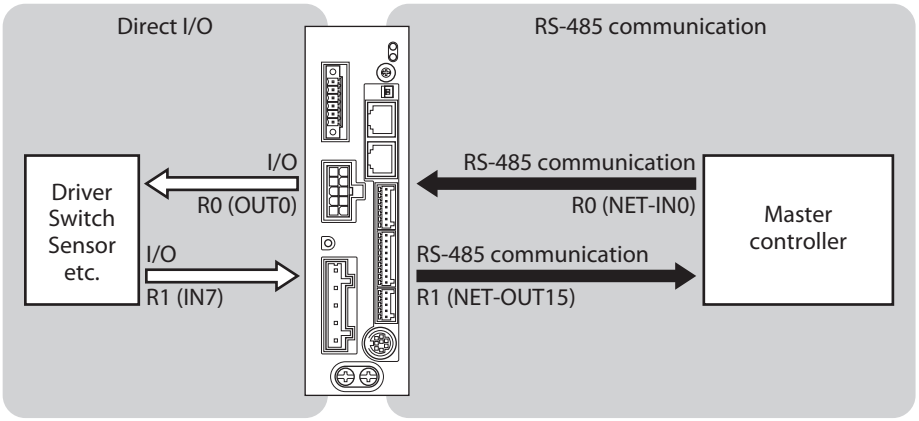

* The figure shows the AC power input.

2 Method of control via I/O

2-1 Guidance

If you are new to the **AR** Series FLEX built-in controller type, read this section to understand the operating methods along with the operation flow.

Note Before operating the motor, check the condition of the surrounding area to ensure safety.

■ AC power input

STEP 1 Check the installation and connection

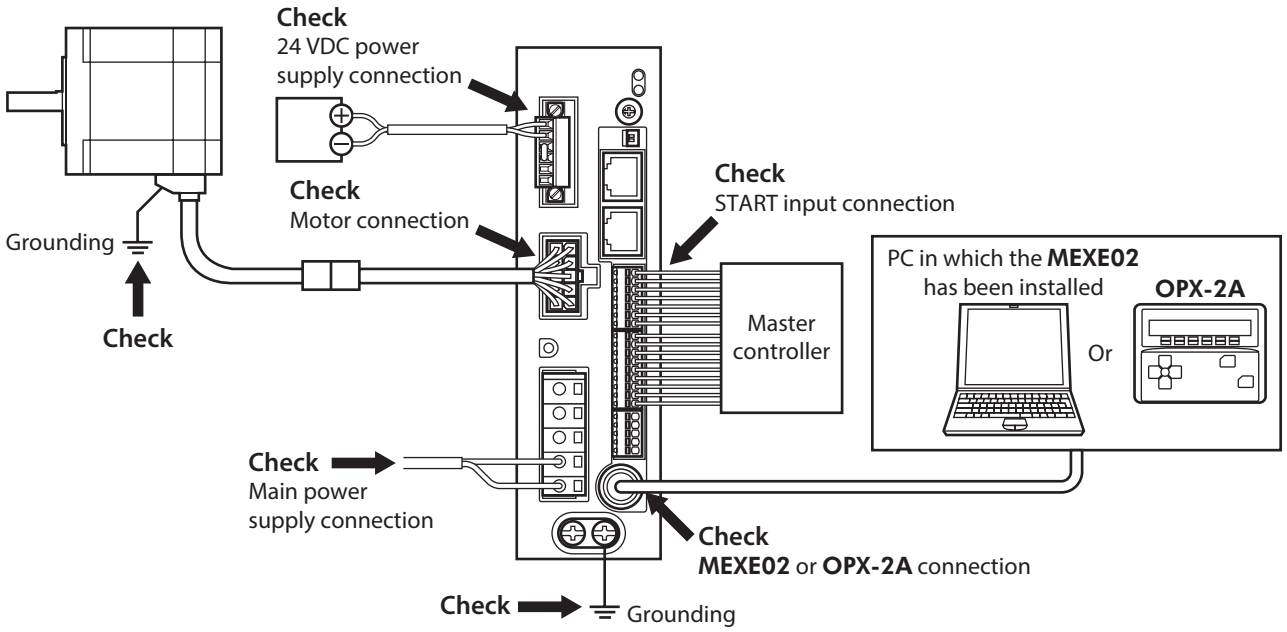

STEP 2 Turn on the power and set the operation data

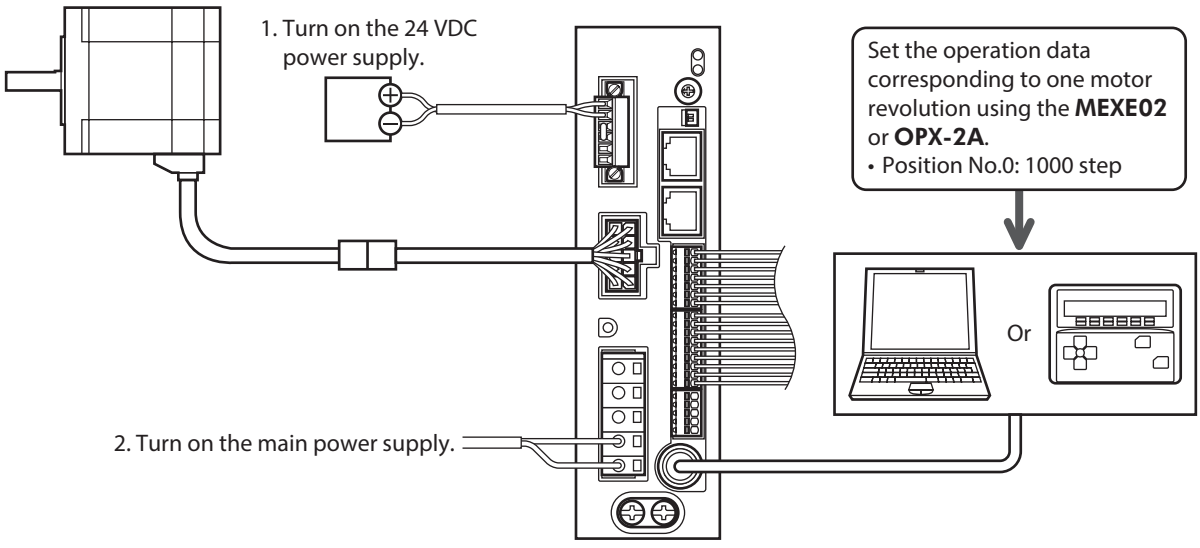

STEP 3 Operate the motor

2. Check the motor rotates according to the setting.

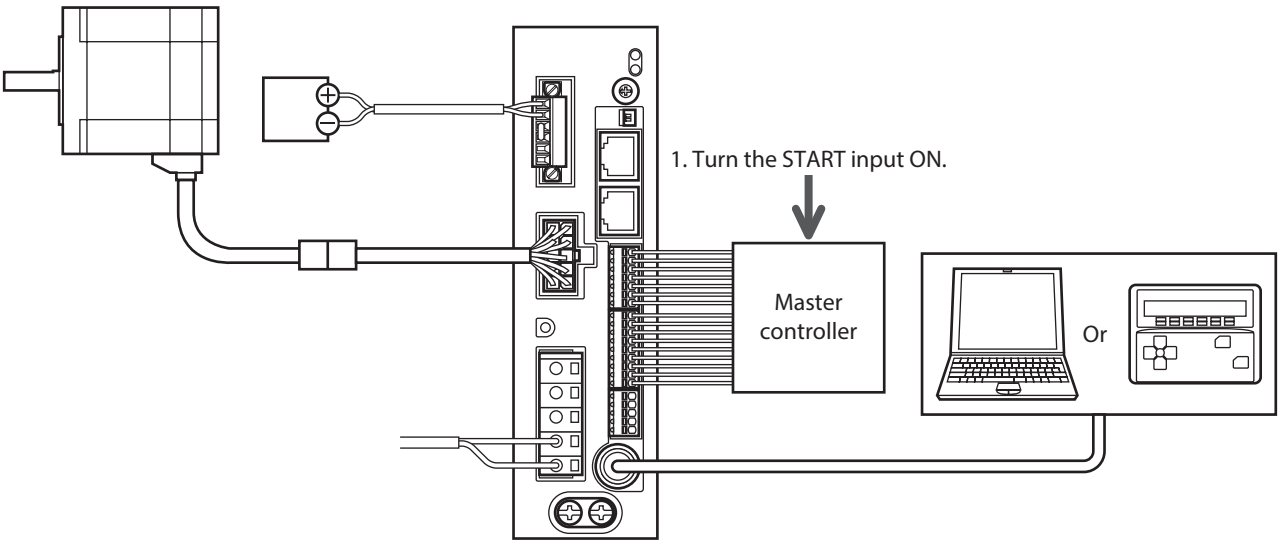

STEP 4 Were you able to operate the motor properly?

How did it go? Were you able to operate the motor properly? If the motor does not function, check the following points:

- Are the regeneration resistor thermal input terminals (TH1 and TH2) on the CN1 short-circuited?
- Is any alarm present?
- Are the power supply and motor connected securely?

For more detailed settings and functions, refer to "5 Operation type and setting" on p.155.

■ DC power input

STEP 1 Check the installation and connection

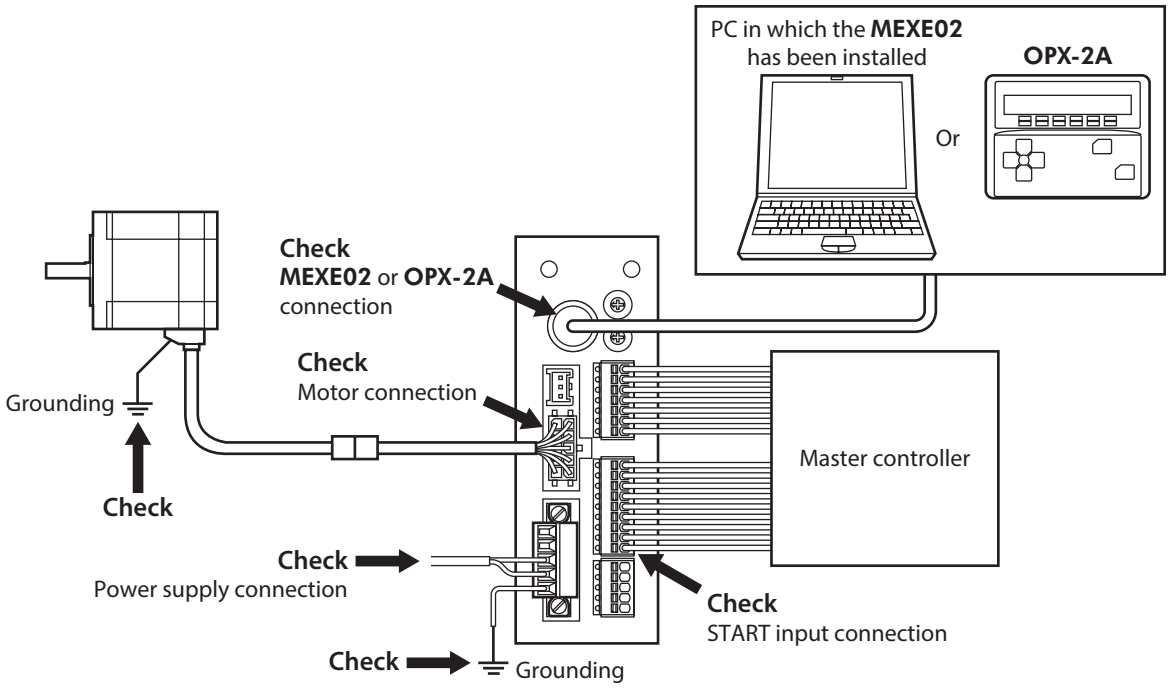

STEP 2 Turn on the power and set the operation data

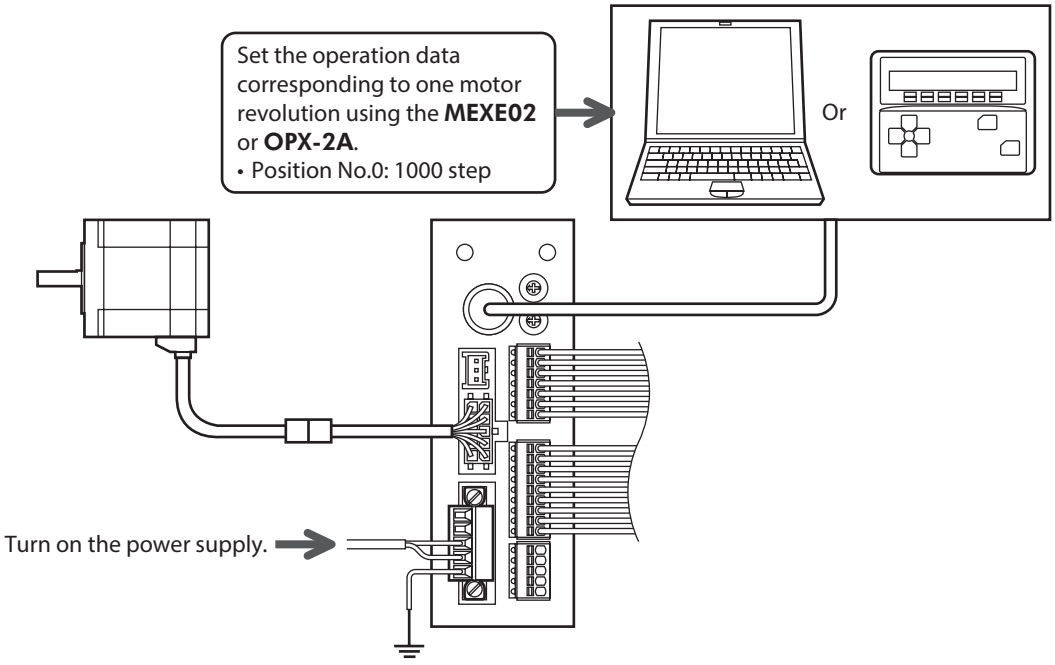

STEP 3 Operate the motor

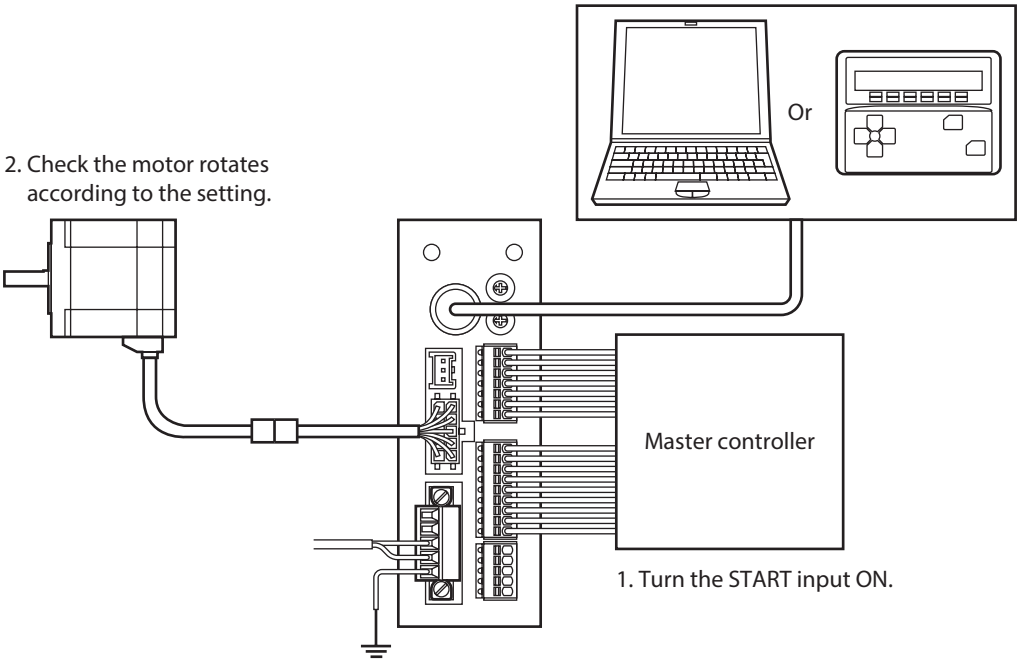

STEP 4 Were you able to operate the motor properly?

How did it go? Were you able to operate the motor properly? If the motor does not function, check the following points:

- Is any alarm present?
- Are the power supply and motor connected securely?

For more detailed settings and functions, refer to "5 Operation type and setting" on p.155.

2-2 Operation data

Up to 64 operation data can be set (data Nos.0 to 63).
If the data is changed, a recalculation and setup will be performed after the operation is stopped.

Data	Description	Initial value
Position No.0 to Position No.63	Sets the position (distance) for positioning operation. **[Setting range]** −8,388,608 to +8,388,607 step	0
Operating speed No.0 to Operating speed No.63	Sets the operating speed in positioning operation and continuous operation. **[Setting range]** 0 to 1,000,000 Hz	1000
Operation mode No.0 to Operation mode No.63	Selects how to specify the position (travel amount) in positioning operation. **[Setting range]** 0: Incremental (INC) 1: Absolute (ABS)	0
Operation function No.0 to Operation function No.63	Sets the operation mode to execute positioning operation. **[Setting range]** 0: Single-motion 1: Linked-motion 2: Linked-motion 2 3: Push	0
Acceleration No.0 to Acceleration No.63	Sets the acceleration rate (acceleration time) in positioning operation and continuous operation. *1 **[Setting range]** 1 to 1,000,000 (1=0.001 ms/kHz or 1=0.001 s) *2	1000
Deceleration No.0 to Deceleration No.63	Sets the deceleration rate (deceleration time) in positioning operation and continuous operation. *1 **[Setting range]** 1 to 1,000,000 (1=0.001 ms/kHz or 1=0.001 s) *2	1000
Push current No.0 to Push current No.63	Sets the current rate of push-motion operation. **[Setting range]** 0 to 1000 (1=0.1%) *3	200
Sequential positioning No.0 to Sequential positioning No.63	Sets whether to enable or disable sequential positioning operation. **[Setting range]** 0: Disable 1: Enable	0
Dwell time No.0 to Dwell time No.63	Sets the dwell time to be used in linked-motion 2 operation. **[Setting range]** 0 to 50000 (1=0.001 s)	0

*1 This item is effective when the "acceleration/deceleration type" parameter is set to "separate." If this parameter is set to "common," the values of the "common acceleration" and "common deceleration" parameters will be used (initial value: separate).
*2 Acceleration/deceleration rate (ms/kHz) or acceleration/deceleration time (s) can be selected using "acceleration/deceleration unit" parameter (initial value: ms/kHz).
*3 For the driver which is before the specification change, the setting range is 0 to 500 (1=0.1%). Refer to p.7 for details.

2-3 Parameters

The parameters are saved in the RAM or non-volatile memory. The data saved in the RAM will be erased once the DC power supply is turned off. On the other hand, the parameters saved in the non-volatile memory will be retained even after the DC power supply is turned off.
When turning the driver DC power supply on, the parameters saved in the non-volatile memory will be sent to the RAM. Then, the recalculation and setup for the parameters are executed in the RAM.

Parameters having set via RS-485 communication or industrial network are saved in the RAM. To save the parameters stored in the RAM to the non-volatile memory, execute the "batch non-volatile memory write" of the maintenance command.
The parameters set with the **MEXE02** will be saved in the non-volatile memory if "data writing" is performed.

When a parameter is changed, the timing to enable the new value varies depending on the parameter. See the following four types.

Update timing		Description
A	Immediately	Executes the recalculation and setup immediately when writing the parameter.
B	After stopping the operation	Executes the recalculation and setup after stopping the operation.
C	After executing the configuration or cycling the power	Executes the recalculation and setup after executing the configuration or cycling the DC power supply.
D	After cycle the power	Executes the recalculation and setup after cycling the DC power supply.

In this chapter, each update timing is represented in A to D.

memo
- Parameters set via RS-485 communication or industrial network are saved in the RAM. If parameters, which are required turning on the power again in order to update, are changed, be sure to save them in the non-volatile memory before turning off the power.
- The non-volatile memory can be rewritten approximately 100,000 times.

■ Parameter list

I/O parameter (p.114)	• STOP input action	• Minimum ON time for MOVE output
	• Hardware overtravel	• LS contact configuration
	• Overtravel action	• HOMES logic level
	• END signal range	• SLIT logic level
	• Positioning complete output offset	• MS0 operation No. selection
	• AREA1 positive direction position	• MS1 operation No. selection
	• AREA1 negative direction position	• MS2 operation No. selection
	• AREA2 positive direction position	• MS3 operation No. selection
	• AREA2 negative direction position	• MS4 operation No. selection
	• AREA3 positive direction position	• MS5 operation No. selection
	• AREA3 negative direction position	• HOME-P output function selection
Motor parameter (p.115)	• RUN current	• Moving average time
	• STOP current	• Filter selection
	• Position loop gain	• Speed difference gain 1
	• Speed loop gain	• Speed difference gain 2
	• Speed loop integral time constant	• Control mode
	• Speed filter	• Smooth drive

Operation parameter (p.116)	• Common acceleration • Common deceleration • Starting speed • JOG operating speed • Acceleration/deceleration rate of JOG • JOG starting speed • Acceleration/deceleration type	• Acceleration/deceleration unit • Automatic return operation • Operation speed of automatic return • Acceleration (deceleration) of automatic return • Starting speed of automatic return • JOG travel amount
Home operation parameter (p.117)	• Home-seeking mode • Operating speed of home-seeking • Acceleration/deceleration of home-seeking • Starting speed of home-seeking • Position offset of home-seeking	• Starting direction of home-seeking • SLIT detection with home-seeking • TIM signal detection with home-seeking • Operating current of home-seeking with push-motion
Alarm parameter (p.118)	• Overload alarm • Excessive position deviation alarm at current ON	• Return-to-home incomplete alarm • Excessive position deviation alarm at current OFF
Warning parameter (p.118)	• Overheat warning • Overload warning • Overspeed warning	• Overvoltage warning • Undervoltage warning • Excessive position deviation warning at current ON
Coordinates parameter (p.119)	• Electronic gear A • Electronic gear B • Motor rotation direction • Software overtravel	• Positive software limit • Negative software limit • Preset position • Wrap setting • Wrap setting range
Common parameter (p.119)	• Data setter speed display • Data setter edit • Absolute back-up system	
I/O function [input] parameter (p.120)	• IN0 to IN7 input function selection • IN0 to IN7 input logic level setting	
I/O function [output] parameter (p.120)	• OUT0 to OUT5 output function selection	
I/O function [RS-485] parameter (p.121)	• NET-IN0 to NET-IN15 input function selection • NET-OUT0 to NET-OUT15 output function selection	
Communication parameter (p.122)	• Communication timeout • Communication error alarm • Communication parity	• Communication stop bit • Transmission waiting time

■ I/O parameter

Parameter name	Description	Initial value	Effective (p.112)
STOP input action	Sets how the motor should stop when a STOP input is turned ON. **[Setting range]** 0: Immediate stop 1: Decelerate stop 2: Immediate stop & Current OFF 3: Deceleration stop & Current OFF	1	A
Hardware overtravel	Sets whether to enable or disable hardware overtravel detection using ±LS inputs. **[Setting range]** 0: Disable 1: Enable	1	
Overtravel action	Sets the motor stop action to take place upon the occurrence of overtravel. **[Setting range]** 0: Immediate stop 1: Decelerate stop	0	
END signal range	Sets the output range of the END signal (the motor operation converges within this angular range). **[Setting range]** 0 to 180 (1=0.1°)	18	
Positioning complete output offset	Sets the offset for the END signal (the offset for converging angular range). **[Setting range]** −18 to 18 (1=0.1°)	0	
AREA1 positive direction position AREA2 positive direction position AREA3 positive direction position	Sets the AREA1 to AREA3 positive direction position. **[Setting range]** −8,388,608 to 8,388,607 step	0	
AREA1 negative direction position AREA2 negative direction position AREA3 negative direction position	Sets the AREA1 to AREA3 negative direction position. **[Setting range]** −8,388,608 to 8,388,607 step	0	
Minimum ON time for MOVE output	Sets the minimum ON time for MOVE output. **[Setting range]** 0 to 255 ms	0	
LS contact configuration	Sets the ±LS input logics. **[Setting range]** 0: Make (N.O.) 1: Brake (N.C.)	0	C
HOMES logic level	Sets the HOMES input logic. **[Setting range]** 0: Make (N.O.) 1: Brake (N.C.)	0	
SLIT logic level	Sets the SLIT input logic. **[Setting range]** 0: Make (N.O.) 1: Brake (N.C.)	0	

Parameter name	Description	Initial value	Effective (p.112)
MS0 operation No. selection	Sets operation data No. corresponding to MS0 to MS5 input. **[Setting range]** Operation data No.0 to 63	0	B
MS1 operation No. selection		1	
MS2 operation No. selection		2	
MS3 operation No. selection		3	
MS4 operation No. selection		4	
MS5 operation No. selection		5	
HOME-P output function selection	Sets the timing to output the HOME-P output. **[Setting range]** 0: Home output 1: Return-to-home complete output	0	A

■ Motor parameter

Parameter name	Description	Initial value	Effective (p.112)
RUN current	Sets the motor operating current based on the rated current being 100%. **[Setting range]** 0 to 1000 (1=0.1%)	1000	A
STOP current	Sets the motor standstill current as a percentage of the rated current, based on the rated current being 100%. **[Setting range]** 0 to 500 (1=0.1%)	500	
Position loop gain	Adjusts the motor response in reaction to the position deviation. **[Setting range]** 1 to 50	10	
Speed loop gain	Adjusts the motor response in reaction to the speed deviation. **[Setting range]** 10 to 200	180	
Speed loop integral time constant	Adjusts the deviation that cannot be adjusted with the speed loop gain. **[Setting range]** 100 to 2000 (1=0.1 ms)	1000	
Speed filter	Adjusts the motor response. **[Setting range]** 0 to 200 ms	1	B
Moving average time	Sets the time constant for the moving average filter. **[Setting range]** 1 to 200 ms	1	
Filter selection	Sets the filter function to adjust the motor response. **[Setting range]** 0: Speed filter 1: Moving average filter	0	C
Speed difference gain 1	Adjusts vibration during operation. **[Setting range]** 0 to 500	45	A
Speed difference gain 2	Adjusts vibration during acceleration/deceleration. **[Setting range]** 0 to 500	45	

Parameter name	Description	Initial value	Effective (p.112)
Control mode	Sets the control mode of the driver. **[Setting range]** 0: Normal mode 1: Current control mode	0	C
Smooth drive	Sets whether to enable or disable smooth drive function. **[Setting range]** 0: Disable 1: Enable	1	

■ Operation parameter

Parameter name	Description	Initial value	Effective (p.112)
Common acceleration	Sets the common acceleration rate (common acceleration time) in positioning operation and continuous operation. **[Setting range]** 1 to 1,000,000 (1=0.001 ms/kHz or 1=0.001 s) *	1000	B
Common deceleration	Sets the common deceleration rate (common deceleration time) in positioning operation and continuous operation. **[Setting range]** 1 to 1,000,000 (1=0.001 ms/kHz or 1=0.001 s) *	1000	
Starting speed	Sets the starting speed in positioning operation and continuous operation. The motor will operate at the starting speed if the operating speed is below the starting speed. **[Setting range]** 0 to 1,000,000 Hz	500	
JOG operating speed	Sets the operating speed for JOG operation. **[Setting range]** 1 to 1,000,000 Hz	1000	
Acceleration/ deceleration rate of JOG	Sets the acceleration/deceleration rate (acceleration/deceleration time) for JOG operation. **[Setting range]** 1 to 1,000,000 (1=0.001 ms/kHz or 1=0.001 s) *	1000	
JOG starting speed	Sets the starting speed for JOG operation. **[Setting range]** 0 to 1,000,000 Hz	500	
Acceleration/ deceleration type	Sets whether to use the common acceleration/deceleration or the acceleration/deceleration specified for the operation data. **[Setting range]** 0: Common 1: Separate	1	
Acceleration/ deceleration unit	Sets the acceleration/deceleration unit. **[Setting range]** 0: ms/kHz 1: s	0	C
Automatic return operation	Sets whether to enable or disable automatic return operation. **[Setting range]** 0: Disable 1: Enable	0	
Operation speed of automatic return	Sets the operating speed for automatic return operation. **[Setting range]** 1 to 1,000,000 Hz	1000	B

Parameter name	Description	Initial value	Effective (p.112)
Acceleration (deceleration) of automatic return	Sets the acceleration/deceleration rate (acceleration/deceleration time) for automatic return operation. **[Setting range]** 1 to 1,000,000 (1=0.001 ms/kHz or 1=0.001 s) *	1000	B
Starting speed of automatic return	Sets the starting speed for automatic return operation. **[Setting range]** 0 to 1,000,000 Hz	500	
JOG travel amount	Sets the travel amount for JOG operation. **[Setting range]** 1 to 8,388,607 step	1	

* Acceleration/deceleration rate (ms/kHz) or acceleration/deceleration time (s) can be selected using "acceleration/deceleration unit" parameter (initial value: acceleration/deceleration rate).

■ Home operation parameter

Parameter name	Description	Initial value	Effective (p.112)
Home-seeking mode	Sets the mode for return-to-home operation. **[Setting range]** 0: 2-sensor mode 1: 3-sensor mode 2: Push mode	1	B
Operating speed of home-seeking	Sets the operating speed for return-to-home operation. **[Setting range]** 1 to 1,000,000 Hz	1000	
Acceleration/deceleration of home-seeking	Sets the acceleration/ deceleration rate (acceleration/deceleration time) for return-to-home operation. **[Setting range]** 1 to 1,000,000 (1=0.001 ms/kHz or 1=0.001 s) *	1000	
Starting speed of home-seeking	Sets the starting speed for return-to-home operation. **[Setting range]** 1 to 1,000,000 Hz	500	
Position offset of home-seeking	Sets the amount of offset from mechanical home. **[Setting range]** –8,388,608 to 8,388,607 step	0	
Starting direction of home-seeking	Sets the starting direction for home detection. **[Setting range]** 0: Negative direction 1: Positive direction	1	
SLIT detection with home-seeking	Sets whether or not to concurrently use the SLIT input for return-to-home operation. **[Setting range]** 0: Disable 1: Enable	0	
TIM signal detection with home-seeking	Sets whether or not to concurrently use the TIM signal for return-to-home operation. **[Setting range]** 0: Disable 1: Enable	0	
Operating current of home-seeking with push-motion	Sets the operating current for push-motion return-to-home operation based on the rated current being 100%. **[Setting range]** 0 to 1000 (1=0.1%)	1000	

* Acceleration/deceleration rate (ms/kHz) or acceleration/deceleration time (s) can be selected using "acceleration/deceleration unit" parameter (initial value: acceleration/deceleration rate).

■ Alarm parameter

Parameter name	Description	Initial value	Effective (p.112)
Overload alarm	Sets the condition that an overload alarm generates. **[Setting range]** 1 to 300 (1=0.1 s)	50	A
Excessive position deviation alarm at current ON	Sets the condition that an excessive position deviation alarm generates when the motor is in a state of current ON. **[Setting range]** 1 to 30000 (1=0.01 rev)	300	
Return-to-home incomplete alarm	When the positioning operation is started while the position origin has not been set, selects whether the alarm generates or not. **[Setting range]** 0: Disable 1: Enable	0	C
Excessive position deviation alarm at current OFF	Sets the condition that an excessive position deviation alarm generates when the motor is in a state of current OFF. If the position deviation exceeds the setting value in the "excessive position deviation alarm at current ON" parameter, the excessive position deviation warning at current OFF generates. In addition, if the C-ON input is turned ON, the excessive position deviation alarm at current OFF generates. **[Setting range]** 1 to 30000 (1=0.01 rev)	10000	A

■ Warning parameter

Parameter name	Description	Initial value	Effective (p.112)
Overheat warning	Sets the condition that a main circuit overheat warning generates. **[Setting range]** 40 to 85 °C	85	A
Overload warning	Sets the condition that an overload warning generates. **[Setting range]** 1 to 300 (1=0.1 s)	50	
Overspeed warning	Sets the condition that an overspeed warning generates. **[Setting range]** 1 to 5000 r/min	4500	
Overvoltage warning (AC power input)	Sets the condition that an overvoltage warning generates. **[Setting range]** 120 to 450 V	435	
Overvoltage warning (DC power input)	Sets the condition that an overvoltage warning generates. **[Setting range]** 150 to 630 (1=0.1 V)	630	
Undervoltage warning (AC power input)	Sets the condition that an undervoltage warning generates. **[Setting range]** 120 to 280 V	120	
Undervoltage warning (DC power input)	Sets the condition that an undervoltage warning generates. **[Setting range]** 150 to 630 (1=0.1 V)	180	
Excessive position deviation warning at current ON	Sets the condition that an excessive position deviation warning generates when the motor is in a state of current ON. **[Setting range]** 1 to 30000 (1=0.01 rev)	300	

■ Coordinates parameter

Parameter name	Description	Initial value	Effective (p.112)
Electronic gear A	Sets the denominator of electronic gear. **[Setting range]** 1 to 65535	1	C
Electronic gear B	Sets the numerator of electronic gear. **[Setting range]** 1 to 65535	1	
Motor rotation direction	Sets the rotation direction of motor output shaft. **[Setting range]** 0: Positive direction=CCW 1: Positive direction=CW	1	
Software overtravel	Sets whether to enable or disable software overtravel detection using soft limits. **[Setting range]** 0: Disable 1: Enable	1	A
Positive software limit	Sets the value of soft limit in positive direction. **[Setting range]** –8,388,608 to 8,388,607 step	8,388,607	
Negative software limit	Sets the value of soft limit in negative direction. **[Setting range]** –8,388,608 to 8,388,607 step	–8,388,608	
Preset position	Sets the preset position. **[Setting range]** –8,388,608 to 8,388,607 step	0	
Wrap setting	Sets whether to enable or disable wrap function. **[Setting range]** 0: Disable 1: Enable	0	C
Wrap setting range	Sets the wrap setting range. **[Setting range]** 1 to 8,388,607 step	1000	

■ Common parameter

Parameter name	Description	Initial value	Effective (p.112)
Data setter speed display	Sets the display method of the speed monitor for the **OPX-2A**. **[Setting range]** 0: Signed 1: Absolute value	0	A
Data setter edit	Sets whether it is possible to edit using the **OPX-2A**. **[Setting range]** 0: Disable 1: Enable	1	
Absolute back-up system	Sets whether to enable or disable absolute-position backup system. **[Setting range]** 0: Disable 1: Enable	0	C

■ I/O function [input] parameter

Parameter name	Description	Initial value	Effective (p.112)
IN0 input function selection	Assigns the input signals to IN0 to IN7 of the input terminals. **[Setting range]** Refer to the following table.	3: HOME	C
IN1 input function selection		4: START	
IN2 input function selection		48: M0	
IN3 input function selection		49: M1	
IN4 input function selection		50: M2	
IN5 input function selection		16: FREE	
IN6 input function selection		18: STOP	
IN7 input function selection		24: ALM-RST	
IN0 input logic level setting	Changes the logic level setting for input terminals IN0 to IN7. **[Setting range]** 0: Make (N.O.) 1: Brake (N.C.)	0	
IN1 input logic level setting			
IN2 input logic level setting			
IN3 input logic level setting			
IN4 input logic level setting			
IN5 input logic level setting			
IN6 input logic level setting			
IN7 input logic level setting			

● **Setting range for IN input function selection**

0: No function	8: MS0	18: STOP	35: R3	43: R11	51: M3
1: FWD	9: MS1	24: ALM-RST	36: R4	44: R12	52: M4
2: RVS	10: MS2	25: P-PRESET	37: R5	45: R13	53: M5
3: HOME	11: MS3	26: P-CLR	38: R6	46: R14	
4: START	12: MS4	27: HMI	39: R7	47: R15	
5: SSTART	13: MS5	32: R0	40: R8	48: M0	
6: +JOG	16: FREE	33: R1	41: R9	49: M1	
7: –JOG	17: C-ON	34: R2	42: R10	50: M2	

■ I/O function [output] parameter

Parameter name	Description	Initial value	Effective (p.112)
OUT0 output function selection	Assigns the output signals to OUT0 to OUT5 of the output terminals. **[Setting range]** Refer to the following table.	70: HOME-P	C
OUT1 output function selection		69: END	
OUT2 output function selection		73: AREA1	
OUT3 output function selection		67: READY	
OUT4 output function selection		66: WNG	
OUT5 output function selection		65: ALM	

● **Setting range for OUT output function selection**

0: No function	10: MS2_R	35: R3	45: R13	61: –LS_R	72: TIM
1: FWD_R	11: MS3_R	36: R4	46: R14	62: HOMES_R	73: AREA1
2: RVS_R	12: MS4_R	37: R5	47: R15	63: SLIT_R	74: AREA2
3: HOME_R	13: MS5_R	38: R6	48: M0_R	65: ALM	75: AREA3
4: START_R	16: FREE_R	39: R7	49: M1_R	66: WNG	80: S-BSY
5: SSTART_R	17: C-ON_R	40: R8	50: M2_R	67: READY	82: MPS *
6: +JOG_R	18: STOP_R	41: R9	51: M3_R	68: MOVE	
7: –JOG_R	32: R0	42: R10	52: M4_R	69: END	
8: MS0_R	33: R1	43: R11	53: M5_R	70: HOME-P	
9: MS1_R	34: R2	44: R12	60: +LS_R	71: TLC	

* AC power input only.

■ I/O function [RS-485] parameter

Parameter name	Description	Initial value	Effective (p.112)
NET-IN0 input function selection	Assigns the input signals to NET-IN0 to NET-IN15. **[Setting range]** Refer to the following table.	48: M0	C
NET-IN1 input function selection		49: M1	
NET-IN2 input function selection		50: M2	
NET-IN3 input function selection		4: START	
NET-IN4 input function selection		3: HOME	
NET-IN5 input function selection		18: STOP	
NET-IN6 input function selection		16: FREE	
NET-IN7 input function selection		0: No function	
NET-IN8 input function selection		8: MS0	
NET-IN9 input function selection		9: MS1	
NET-IN10 input function selection		10: MS2	
NET-IN11 input function selection		5: SSTART	
NET-IN12 input function selection		6: +JOG	
NET-IN13 input function selection		7: –JOG	
NET-IN14 input function selection		1: FWD	
NET-IN15 input function selection		2: RVS	
NET-OUT0 output function selection	Assigns the output signals to NET-OUT0 to NET-OUT15. **[Setting range]** Refer to the next page.	48: M0_R	
NET-OUT1 output function selection		49: M1_R	
NET-OUT2 output function selection		50: M2_R	
NET-OUT3 output function selection		4: START_R	
NET-OUT4 output function selection		70: HOME-P	
NET-OUT5 output function selection		67: READY	
NET-OUT6 output function selection		66: WNG	
NET-OUT7 output function selection		65: ALM	
NET-OUT8 output function selection		80: S-BSY	
NET-OUT9 output function selection		73: AREA1	
NET-OUT10 output function selection		74: AREA2	
NET-OUT11 output function selection		75: AREA3	
NET-OUT12 output function selection		72: TIM	
NET-OUT13 output function selection		68: MOVE	
NET-OUT14 output function selection		69: END	
NET-OUT15 output function selection		71: TLC	

● Setting range for NET-IN input function selection

0: No function	7: –JOG	16: FREE	32: R0	39: R7	46: R14
1: FWD	8: MS0	17: C-ON	33: R1	40: R8	47: R15
2: RVS	9: MS1	18: STOP	34: R2	41: R9	48: M0
3: HOME	10: MS2	24: ALM-RST *	35: R3	42: R10	49: M1
4: START	11: MS3	25: P-PRESET *	36: R4	43: R11	50: M2
5: SSTART	12: MS4	26: P-CLR *	37: R5	44: R12	51: M3
6: +JOG	13: MS5	27: HMI	38: R6	45: R13	52: M4
					53: M5

* It cannot be set in the driver that is before the specification change. Refer to p.7 for details.

● **Setting range for NET-OUT output function selection**

0: No function	10: MS2_R	35: R3	45: R13	61: –LS_R	72: TIM
1: FWD_R	11: MS3_R	36: R4	46: R14	62: HOMES_R	73: AREA1
2: RVS_R	12: MS4_R	37: R5	47: R15	63: SLIT_R	74: AREA2
3: HOME_R	13: MS5_R	38: R6	48: M0_R	65: ALM	75: AREA3
4: START_R	16: FREE_R	39: R7	49: M1_R	66: WNG	80: S-BSY
5: SSTART_R	17: C-ON_R	40: R8	50: M2_R	67: READY	82: MPS *
6: +JOG_R	18: STOP_R	41: R9	51: M3_R	68: MOVE	
7: –JOG_R	32: R0	42: R10	52: M4_R	69: END	
8: MS0_R	33: R1	43: R11	53: M5_R	70: HOME-P	
9: MS1_R	34: R2	44: R12	60: +LS_R	71: TLC	

* AC power input only.

■ Communication parameter

Parameter name	Description	Initial value	Effective (p.112)
Communication timeout	Sets the condition in which a communication timeout occurs in RS-485 communication. It is not monitored when the set value is 0. **[Setting range]** 0: Not monitored 1 to 10000 ms	0	A
Communication error alarm	Sets the condition in which a RS-485 communication error alarm generates. A communication error alarm generates after a RS-485 communication error has occurred by the number of times set here. **[Setting range]** 1 to 10 times	3	
Communication parity	Sets the parity of RS-485 communication. **[Setting range]** 0: None 1: Even 2: Odd	1	D
Communication stop bit	Sets the stop bit of RS-485 communication. **[Setting range]** 0: 1 bit 1: 2 bits	0	
Transmission waiting time	Sets the transmission waiting time of RS-485 communication. **[Setting range]** 0 to 10000 (1=0.1 ms)	100	

3 Operation using the OPX-2A

This chapter explains the overview and operating method for the **OPX-2A**.
When connect or disconnect the **OPX-2A** cable, turn off the driver power.

3-1 Overview of the OPX-2A

The **OPX-2A** is a data setter that can set the operation data and parameters, and execute monitor and others.
In addition, the **OPX-2A** can be used to save the data of driver. There are four destinations (data banks) to save data.

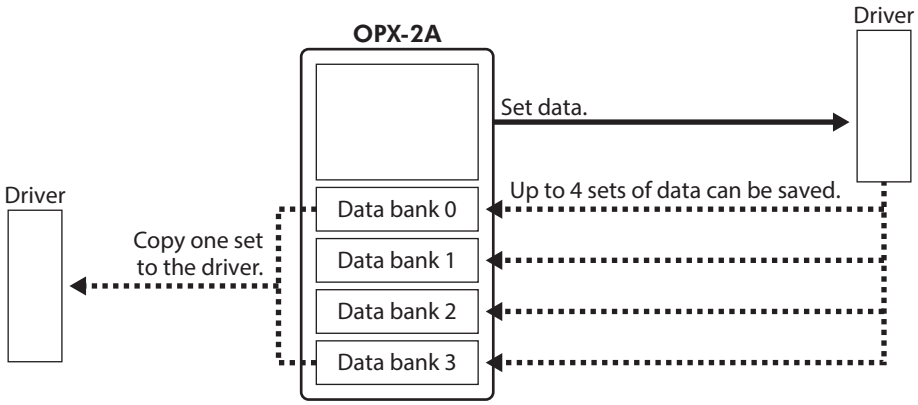

The **OPX-2A** can be used for the following purposes:

- Set data for the driver.
- Monitor the communication time or communication status.
- Check and clear the alarm records.
- The data set in the driver can be saved to the **OPX-2A**.
- The data saved in the **OPX-2A** can be copied to another driver connected to the **OPX-2A**.

■ Notation

In this manual, keys are denoted by symbols, such as【MODE/ESC】【SET】【↑】【↓】【←】【→】.
In figures, a simplified illustration of the display and LED indicators is used, as shown below.

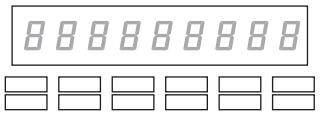

■ Edit lock function

Enable the edit lock function if you want to prevent data from being edited or cleared. Data cannot be changed or deleted while the edit lock function is enabled.

● Setting the edit lock function

In the top screen of each operation mode, press the【MODE/ESC】key for at least 5 seconds.
The display will show "LocK" and the edit lock function will be enabled.
The "LOCK" LED in the LED indicator area will also be lit.

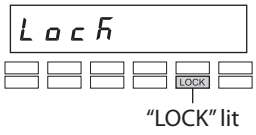

"LOCK" lit

● Canceling the edit lock function

Again in the top screen of each operation mode, press the【MODE/ESC】key for at least 5 seconds.
The display will show "UnLocK" and the edit lock function will be cancelled.
The "LOCK" LED in the LED indicator area will turn off.

3-2 Names and functions of parts

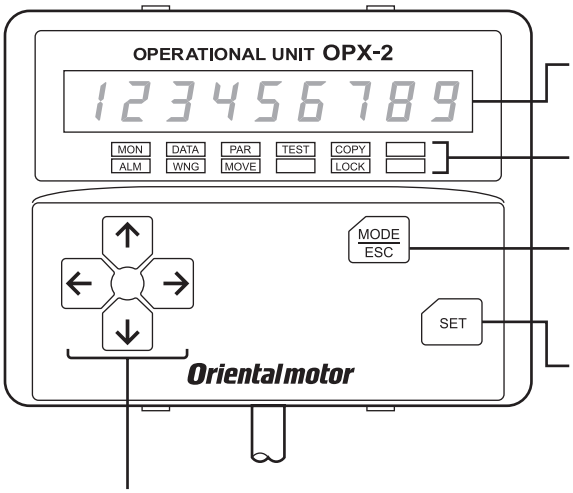

Display
This area shows the motor position, operation data, parameter, alarm, etc.

LED indicators
These LED indicators are used to indicate the operation mode of the **OPX-2A** and the driver status.

- Change the operation mode.
- Move to the upper level.
- Stop the motor immediately while being operated in test mode.
- Select data or change the displayed item.
- Move to the lower level.

Use these buttons to change the selected item or set data.

- Increase or decrease the value.
- Change the selected item.

Navigate through each data to a desired digit.

3-3 How to read the display

The display consists of 7-segment LEDs. (The number "5" and alphabet "S" are the same.)

- Numbers

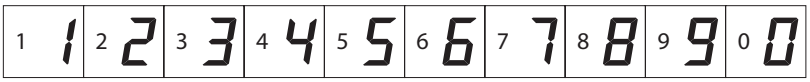

- Alphabets

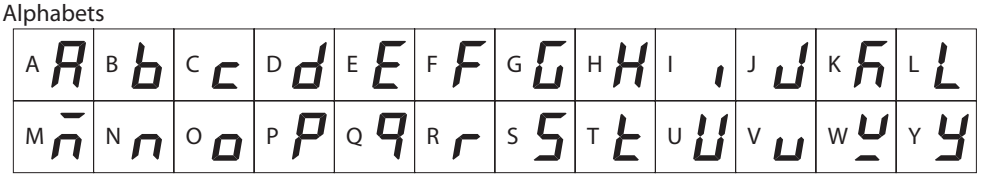

- Signes

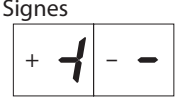

■ How to read the LED indicators

When the operation mode is changed or an alarm or warning generates, a corresponding LED will be lit.
While the motor is operating or the edit lock function is enabled, the condition is also indicated by the illumination of a corresponding LED.

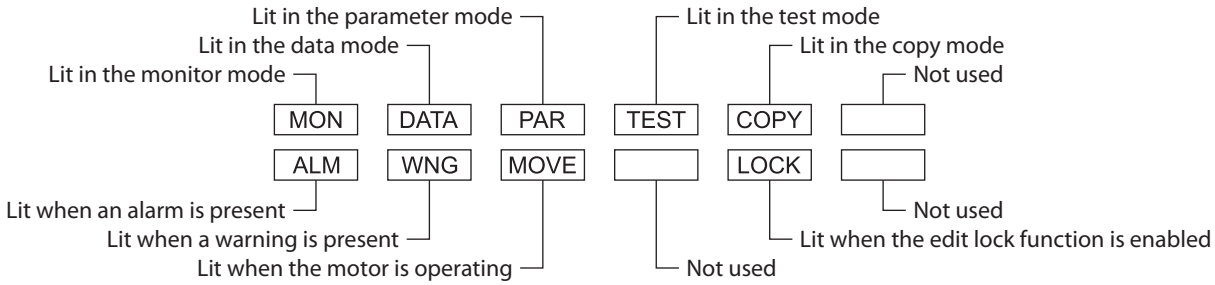

3-4 OPX-2A error display

Errors displayed on the **OPX-2A** are explained.

Error display	Meaning	Action
E inEoUt 1.1	A communication error occurred between the **OPX-2A** and driver.	• Check if the **OPX-2A** is connected securely. • Check if the **OPX-2A** cable is disconnected or damaged. • The **OPX-2A** or the communication part of the driver may have damaged. Contact your nearest Oriental Motor sales office.

3-5 Screen transitions

- Broken line indicates that data writing cannot be executed when internal processing is in progress via RS-485 communication. "mEm-bUSy" is displayed even when the【SET】key is pressed.
- In the lower screen level except the top screen, press【MODE/ESC】key to return to the previous level.

memo

- The following limitations are present while the edit lock function is enabled.
  - · Data mode, parameter mode: Although they are displayed on the screen, they are unable to operate.
  - · Clearing the alarm and warning records, clearing the data, position preset, teaching and copy mode: They are not displayed on the screen.
- When the HMI input is in OFF, functions other than monitor mode, upload, verification or viewing of the parameter mode cannot be executed.

● Monitor mode

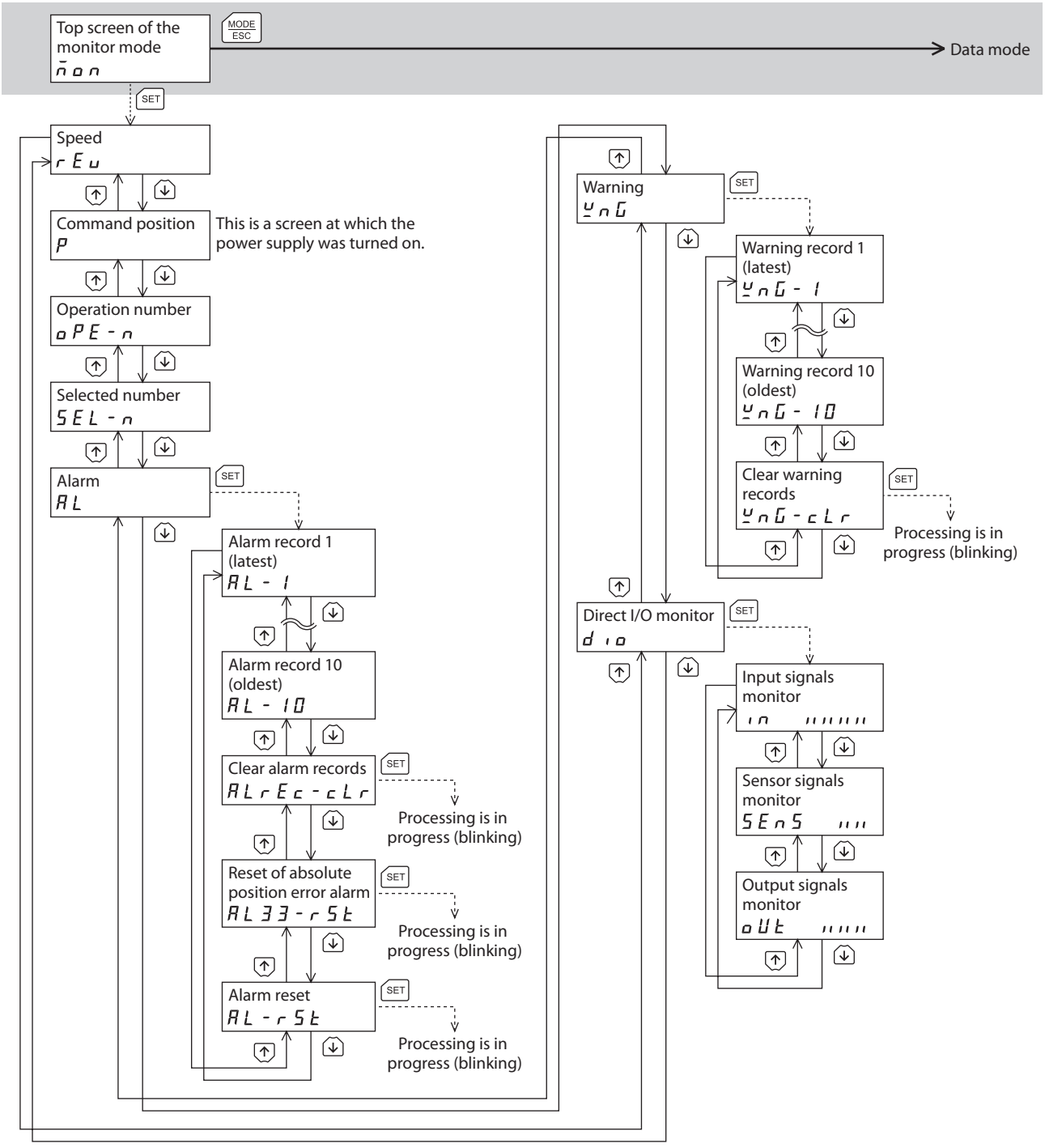

● Data mode

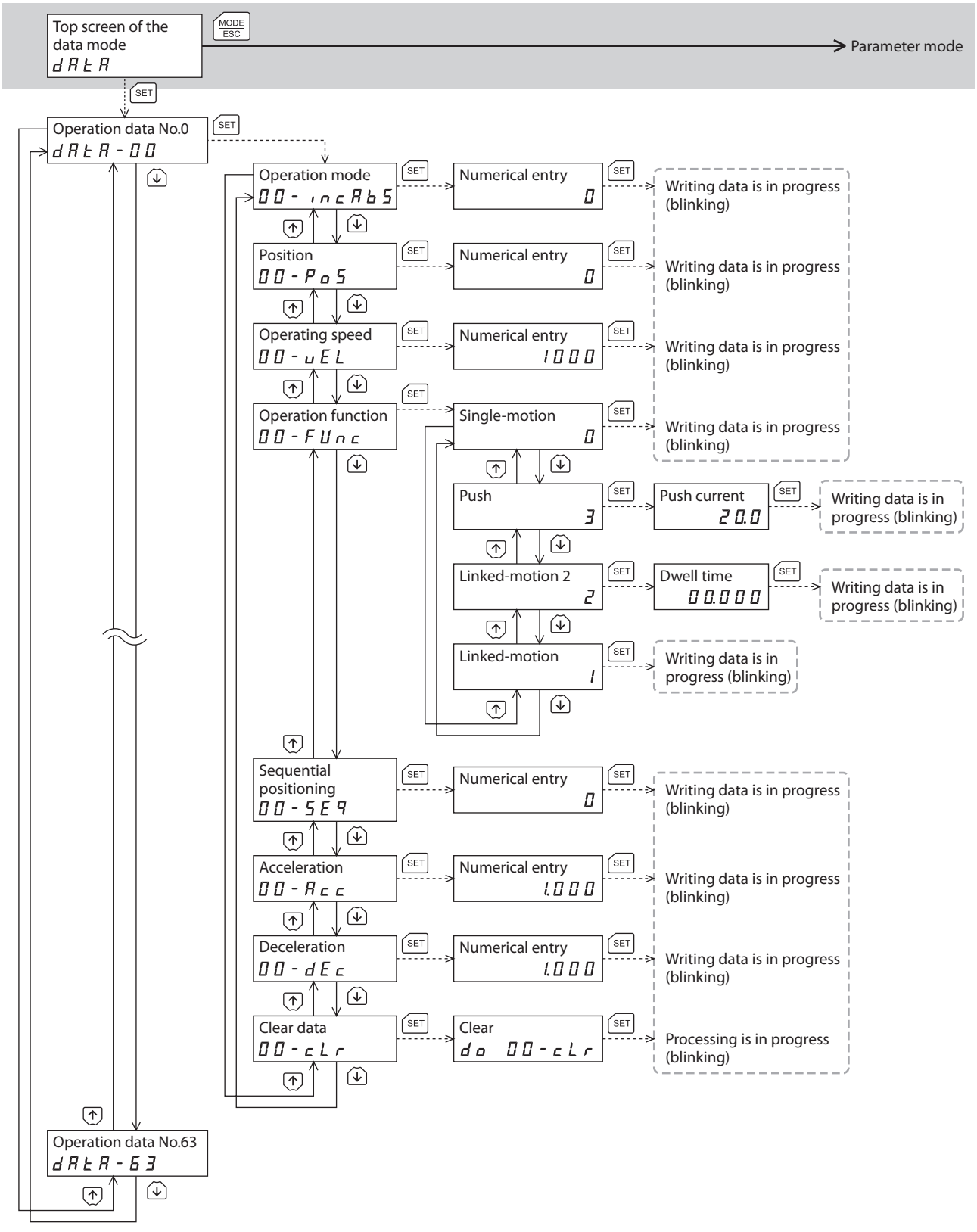
Top screen of the data mode
dAtA
MODE ESC
Parameter mode
SET
Operation data No.0
dAtA-00
Operation mode
00-incAbS
Position
00-PoS
Operating speed
00-uEL
Operation function
00-FUnc
Sequential positioning
00-SEq
Acceleration
00-Acc
Deceleration
00-dEc
Clear data
00-clr
Numerical entry
0
1000
Single-motion
Push
3
Push current
20.0
Linked-motion 2
2
Dwell time
00.000
Linked-motion
1
1.000
Clear
do 00-clr
Writing data is in progress (blinking)
Processing is in progress (blinking)
Operation data No.63
dAtA-63

- **Parameter mode, test mode**

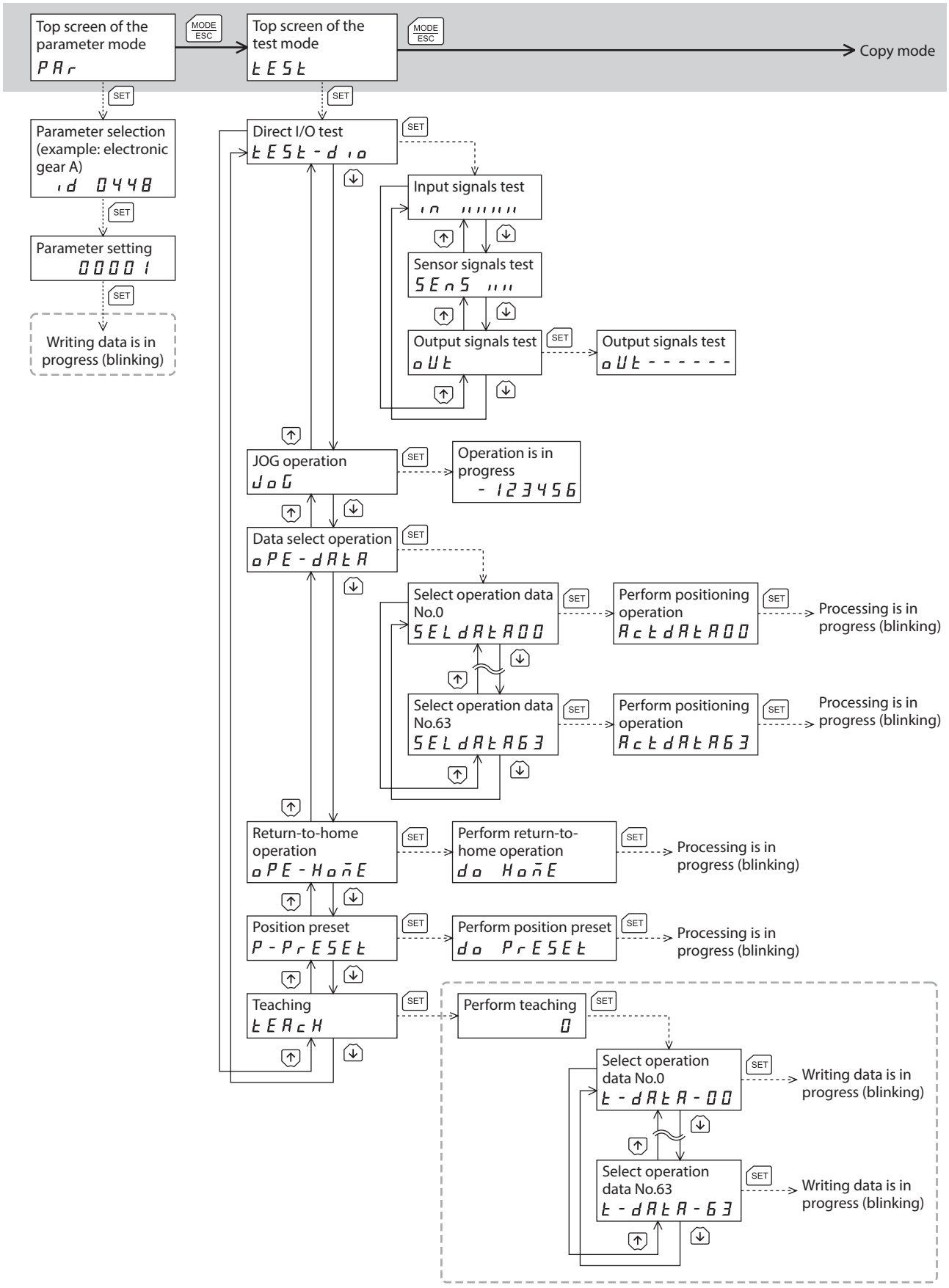

- **Copy mode**

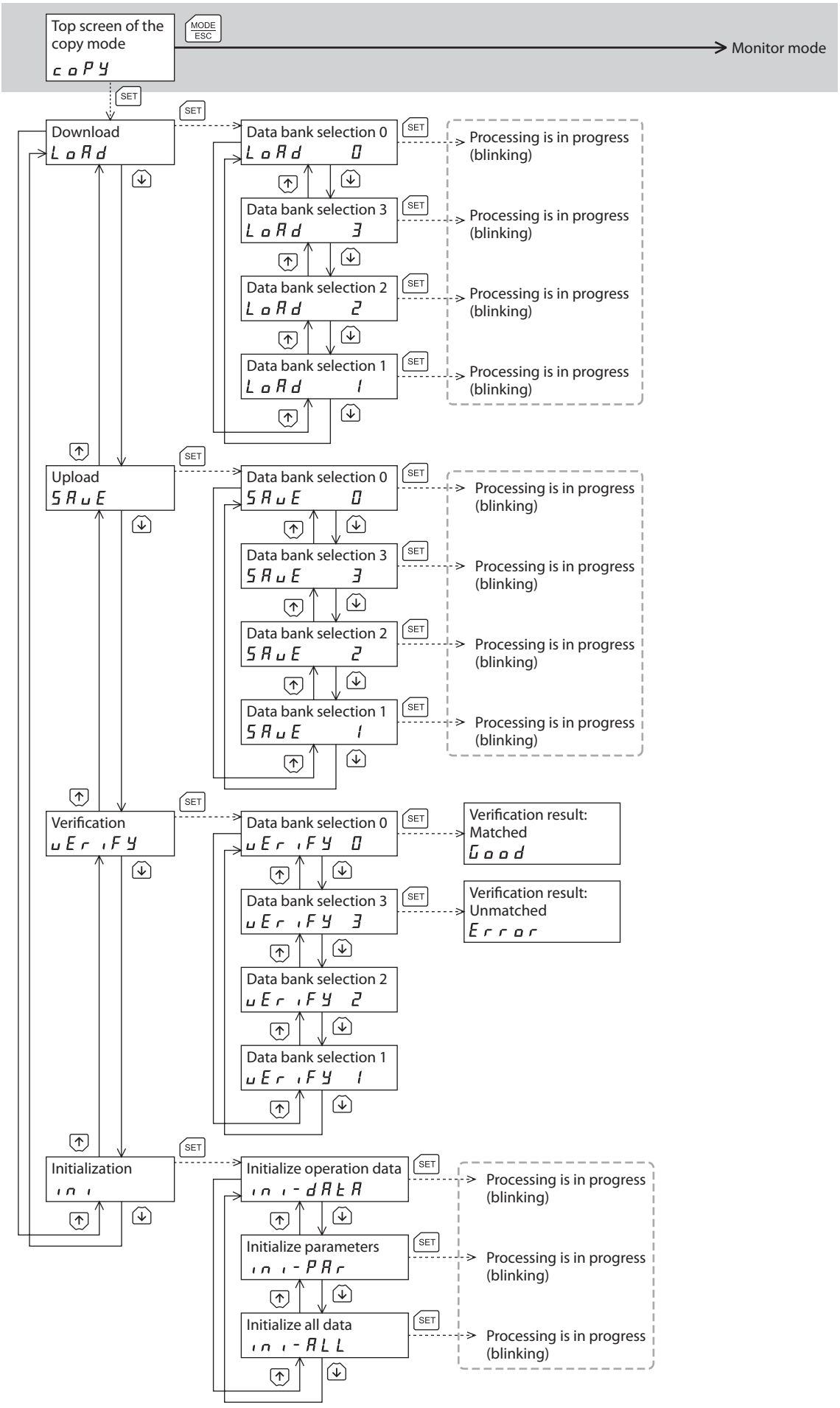
Top screen of the copy mode
coPY
MODE ESC
Monitor mode
SET
Download
LoAd
Data bank selection 0
LoAd 0
Data bank selection 3
LoAd 3
Data bank selection 2
LoAd 2
Data bank selection 1
LoAd 1
Processing is in progress (blinking)
Upload
SAuE
Data bank selection 0
SAuE 0
Data bank selection 3
SAuE 3
Data bank selection 2
SAuE 2
Data bank selection 1
SAuE 1
Verification
uEr iFY
Data bank selection 0
uEr iFY 0
Data bank selection 3
uEr iFY 3
Data bank selection 2
uEr iFY 2
Data bank selection 1
uEr iFY 1
Verification result: Matched
Good
Verification result: Unmatched
Error
Initialization
in i
Initialize operation data
in i-dAtA
Initialize parameters
in i-PAr
Initialize all data
in i-ALL

3-6 Monitor mode

■ Overview of the monitor mode

● Monitoring the operating status

You can monitor the motor speed, command position, operation data number correspoinding to the current operation and operation data number currently selected in real time.

memo A range capable to monitor with the **OPX-2A** is from –19,999,999 to 19,999,999 with up to eight digit numbers. However, only seven digit numbers can be shown on the display of the **OPX-2A**, so only the last seven digit numbers are shown when the monitored value is eight digit numbers, and a dot is marked on the lower right of the display.

• Display example

Actual value	–19,999,999	–10,000,001	–10,000,000	10,000,000	10,000,001	19,999,999
Displayed value	–9999999.	–0000001.	–0000000.	0000000.	0000001.	9999999.

● Checking the alarms/warnings, clearing alarm/warning records, and resetting alarms

- If an alarm or warning generates, a corresponding alarm code or warning code will be displayed. You can check the code to identify the details of the alarm/warning.
- Up to ten most recent alarms/warnings can be displayed, starting from the latest one.
- You can reset the alarms currently present.
- You can clear alarm/warning records.

● Checking the I/O signals

You can check the ON/OFF status of each I/O signal of the driver.

■ Monitor items

● Speed

You can check the motor speed (unit: r/min).
While the motor is rotating in the CCW direction, "–" is shown in front of the displayed value. If the speed is indicated by an absolute value, no sign is shown to indicate the rotating direction. You can select the value display format using the "data setter speed display" parameter.

● Command position

You can check the command position of the motor with reference to the home position.
If a resolution is set, an appropriate value based on the resolution is shown as steps.

● Operation number

You can check the operation data number corresponding to the data used in the current positioning operation.

● Selected number

You can check the operation data number currently selected.

● Alarm

When an alarm generates, a corresponding alarm code will be displayed. You can also reset alarms or check and clear alarm records. Refer to p.145 for details about alarm codes and the method to reset alarms.

Note Do not turn off the driver power while an alarm is being reset or alarm records are being cleared (=while the display is blinking). Doing so may damage the data.

memo Some alarms cannot be reset on the **OPX-2A**. Check by the "Alarm list" on p.146. To reset these alarms, you must cycle the power.

- **Warining**

When a warning generates, a corresponding warning code will be displayed. You can also check or clear warning records. For details about warning code, refer to p.152.

Note Do not turn off the driver power while warning records are being cleared (=while the display is blinking). Doing so may damage the data.

memo You can also clear the warning records by turning off the driver power.

- **Direct I/O monitor**

You can check the ON/OFF status of each I/O signal of the driver.
Each digit on the 7-segment LED display corresponds to a signal. The LED is lit when the signal is ON, and it is unlit when the signal is OFF.

• Input signals

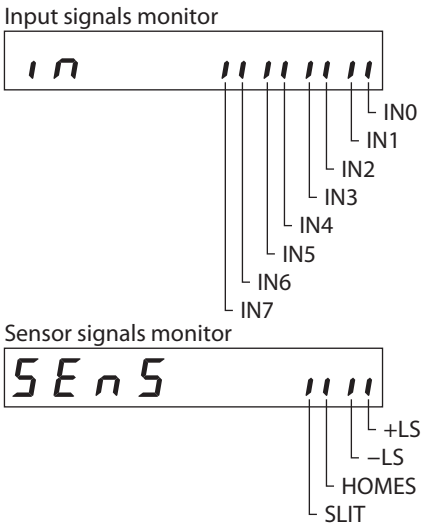

• Output signals

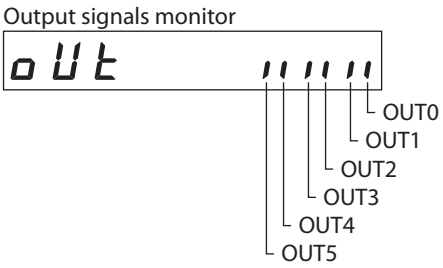

3-7 Data mode

Up to 64 sets of motor operation data can be set. Once set, the operation data is saved in the non-volatile memory of the driver. The data will not be lost even after the **OPX-2A** is disconnected from the driver.

Note Operation data has significant bearing on motor operation. Before setting any operation data, make sure you fully understand the content of the operation data.

memo
- If the operations are limited by the edit lock function or HMI input, operation data cannot be edited.
- Operation data can also be set by selecting the ID with the parameter mode.
- If the value you have input is outside the setting range, "Error" will be displayed for 1 second. If this error display appears, input a different value that falls within the setting range.
- If【SET】key is pressed while executing the internal processing via RS-485 communication, "mEm-bUSy" may be displayed. Check "3-5 Screen transitions" on p.126 when "mEm-bUSy" is displayed. Be sure to wait until all internal processing is completed, before pressing the【SET】key.

■ Setting item

Setting item	Description	Initial value
Operation mode	Selects how to specify the position (travel amount) in positioning operation. **[Setting range]** Inc: Incremental Abs: Absolute	Inc
Position	Sets the position (distance) for positioning operation. **[Setting range]** –8,388,608 to +8,388,607 step	0
Operating speed	Sets the operating speed in positioning operation and continuous operation. **[Setting range]** 1 to 1,000,000 Hz	1000
Operation function	Sets the operation mode to execute positioning operation. **[Setting range]** 0: Single-motion 1: Linked-motion 2: Linked-motion 2 3: Push	0
Sequential positioning	Sets whether to enable or disable sequential positioning operation. **[Setting range]** 0: Disable 1: Enable	0
Acceleration *	Sets the acceleration rate (acceleration time) in positioning operation and continuous operation. **[Setting range]** 0.001 to 1000.000 ms/kHz or 0.001 to 1000.000 s	1.000
Deceleration *	Sets the deceleration rate (deceleration time) in positioning operation and continuous operation. **[Setting range]** 0.001 to 1000.000 ms/kHz or 0.001 to 1000.000 s	
Push current	Sets the current rate of push-motion operation. **[Setting range]** 0.0 to 100.0%	20.0
Dwell time	Sets the dwell time to be used in linked-motion 2 operation. **[Setting range]** 0.000 to 50.000 s	0.000

* This item is effective when the "acceleration/deceleration type" parameteris set to "separate".
  If this parameter is set to "common", the values of the "common acceleration" and "common deceleration" parameters will be used.

● How to set the dwell time

When displaying the "2: Linked-motion 2" on the "operation function" and pressing the【SET】key, the screen to set the dwell time is displayed. Input the dwell time using the【↑】【↓】【←】【→】keys and press the【SET】key.

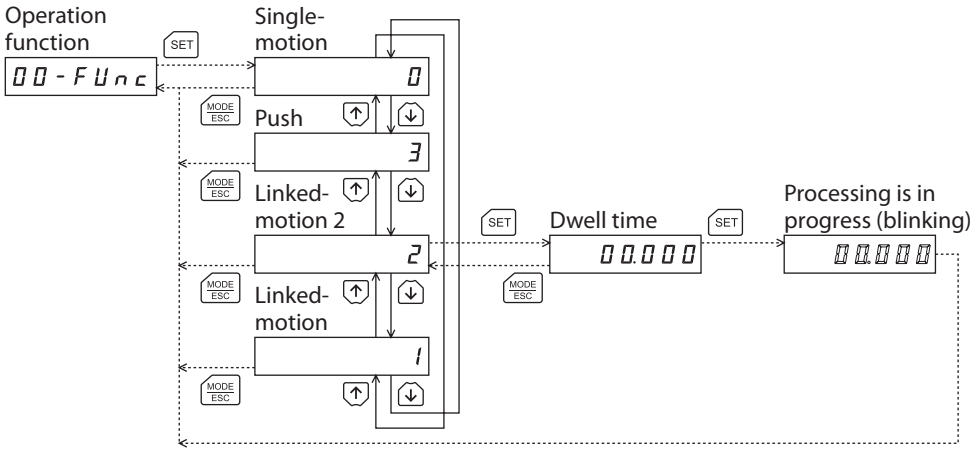

■ Setting example

This section explains how to change the the operation mode and position of the operation data No.0.

- Operation mode: Changes from incremental to absolute.
- Position: Changes from 0 step to 10000 steps.

1. Use the【MODE/ESC】key to select the data mode.
   The "DATA" LED is lit.
2. Press the【SET】key on the top screen of the data mode.
   The display changes to the operation data No.0 screen.
3. Press the【SET】key.
   The display changes to the operation mode screen.
4. Press the【SET】key again.
   The present set value of the operation mode is displayed with blinking.
5. Press the【↓】key once to select "AbS."
6. Press the【SET】key.
   The blinking speed of the input value becomes quickly and the value is set. The display returns to the operation mode screen.
7. Press the【↓】key.
   The display changes to the position screen.
8. Press the【SET】key.
   The present set value of the position is displayed with blinking.
9. Use the【↑】【↓】【←】【→】keys to select "10000".
   The selected digit is displayed with blinking.
10. Press the【SET】key.
    The blinking speed of the input value becomes quickly and the value is set. The display returns to the position screen.
11. Press the【MODE/ESC】key.
    The display returns to the operation data No.0 screen.

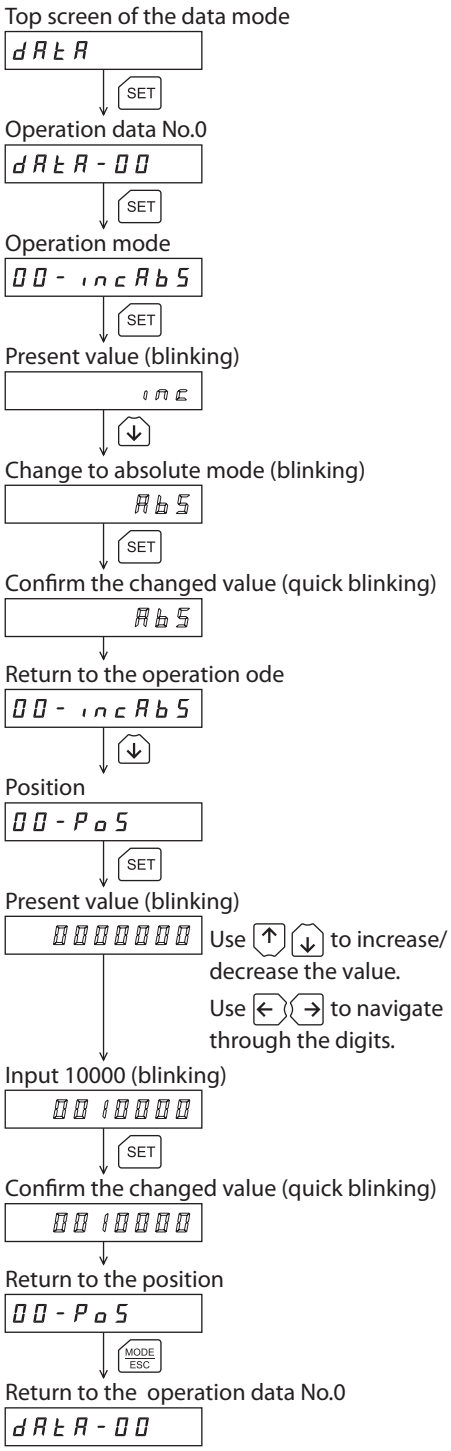

■ Initialization of the selected operation data

All of the set value for the selected operation data number can be reverted to the initial values. Perform "clear data" of the data mode. For the operation, check the screen transitions of the data mode on p.127.

■ Initialization of all operation data

All of the operation data saved in the driver can be reverted to the initial values. Perform "Initialize operation data" of the copy mode. For the operation, check the screen transitions of the copy mode on p.129.

3-8 Parameter mode

You can set parameters relating to motor operation and control. These parameters are saved in the non-volatile memory of the driver.

Note Parameters have significant bearing on motor operation. Before setting any parameter, make sure you fully understand the content of the parameter.

memo
- If operations are limited by the edit lock function or HMI input, parameters cannot be edited.
- If the value you have input is outside the setting range, "Error" will be displayed for 1 second. If this error display appears, input a different value that falls within the setting range.
- If【SET】key is pressed while executing the internal processing via RS-485 communication, "mEm-bUSy" may be displayed. Check "3-5 Screen transitions" on p.126 when "mEm-bUSy" is displayed. Be sure to wait until all internal processing is completed, before pressing the【SET】key.
- If a nonexistent parameter ID is entered, "id-Err" will be displayed for 1 second. Check the ID and enter the correct one.

● **Timing to update the setting value**

When a parameter is changed, the timing to enable the new value varies depending on the parameter. See the following three types.

Update timing		Description
A	Immediately	Executes the recalculation and setup immediately when writing the parameter.
B	After stopping the operation	Executes the recalculation and setup after stopping the operation.
C	After cycle the power	Executes the recalculation and setup after cycling the DC power supply.

In this chapter, each update timing is represented in A to C.

■ Setting example

This section explains how to assign the TIM output to the OUT1 output.

1. Use the【MODE/ESC】key to select the parameter mode.
   The "PAR" LED is lit.
2. Press the【SET】key on the top screen of the parameter mode.
3. Use the【↑】【↓】【←】【→】keys to enter [ID: 2209] in the "OUT1 output function selection" parameter.
4. Press the【SET】key.
   The present set value of the OUT1 output is displayed with blinking.
5. Use the【↑】【↓】【←】【→】keys to enter "72".
   "72" indicates the TIM output.
6. Press the【SET】key.
   The blinking speed of the input value becomes quickly and the value is set.
   The display returns to the OUT1 signal mode selection parameter screen.

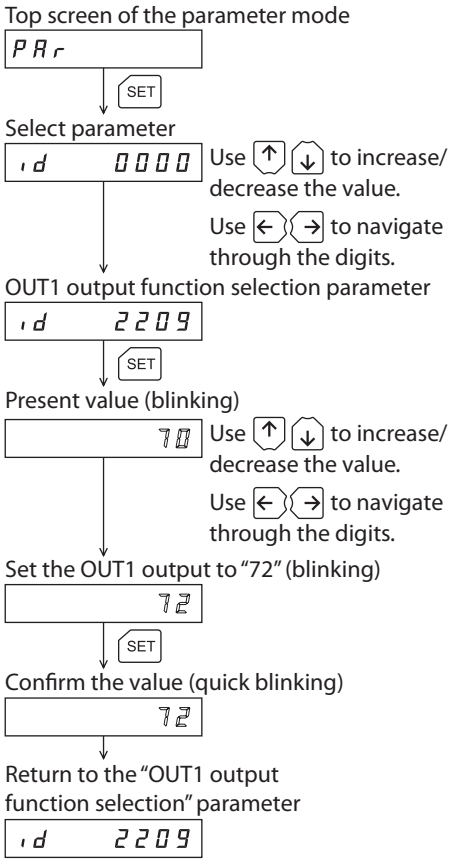

■ Parameter list

There is an unique ID in each parameter. With the **OPX-2A**, set the parameter selecting the ID.

● Operation data

Operation data can also be set by selecting the data mode.

ID	Parameter name	Setting range	Initila value	Effective (p.134)
640 to 703	Operation mode No.0 to Operation mode No.63	Inc: Incremental Abs: Absolute	Inc	B
512 to 575	Position No.0 to Position No.63	–8,388,608 to +8,388,607 step	0	
576 to 639	Operating speed No.0 to Operating speed No.63	0 to 1,000,000 Hz	1000	
704 to 767	Operation function No.0 to Operation function No.63	0: Single-motion 1: Linked-motion 2: Linked-motion 2 3: Push	0	
960 to 1023	Sequencial positioning No.0 to Sequencial positioning No.63	0: Disable 1: Enable	0	
768 to 831	Acceleration No.0 * to Acceleration No.63 *	0.001 to 1000.000 ms/kHz or 0.001 to 1000.000 s	1.000	
832 to 895	Deceleration No.0 * to Deceleration No.63 *	0.001 to 1000.000 ms/kHz or 0.001 to 1000.000 s	1.000	
896 to 959	Push current No.0 to Push current No.63	0.0 to 100.0%	20.0	
1024 to 1087	Dwell time No.0 to Dwell time No.63	0.000 to 50.000 s	0.000	

* This item is effective when the "acceleration/deceleration type" parameteris set to "separate".
If this parameter is set to "common", the values of the "common acceleration" and "common deceleration" parameters will be used.

● **Parameter**

ID	Parameter name	Setting range	Initila value	Effective (p.134)
256	STOP input action	0: Immediate stop 1: Decelerate stop 2: Immediate stop & Current OFF 3: Deceleration stop & Current OFF	1	A
257	Hardware overtravel	0: Disable 1: Enable	1	
258	Overtravel action	0: Immediate stop 1: Decelerate stop	0	
259	END signal range	0.0 to 18.0°	1.8	
260	Positioning complete output offset	−1.8 to 1.8°	0.0	
261	AREA1 positive direction position	−8,388,608 to 8,388,607 step	0	
262	AREA1 negative direction position			
263	AREA2 positive direction position			
264	AREA2 negative direction position			
265	AREA3 positive direction position			
266	AREA3 negative direction position			
267	Minimum ON time for MOVE output	0 to 255 ms	0	
268	LS contact configuration	0: Make (N.O.) 1: Brake (N.C.)	0	C
269	HOMES logic level			
270	SLIT logic level			
288	RUN current	0.0 to 100.0%	100.0	A
289	STOP current	0.0 to 50.0%	50.0	
290	Position loop gain	1 to 50	10	
291	Speed loop gain	10 to 200	180	
292	Speed loop integral time constant	10.0 to 200.0 ms	100.0	
293	Speed filter	0 to 200 ms	1	B
294	Moving average time	1 to 200 ms	1	
320	Common acceleration	0.001 to 1000.000 ms/kHz or 0.001 to 1000.000 s	1.000	
321	Common deceleration			
322	Starting speed	0 to 1,000,000 Hz	500	
323	JOG operating speed	1 to 1,000,000 Hz	1000	
324	Acceleration/deceleration rate of JOG	0.001 to 1000.000 ms/kHz or 0.001 to 1000.000 s	1.000	
325	JOG starting speed	0 to 1,000,000 Hz	500	
326	Acceleration/deceleration type	0: Common 1: Separate	1	
327	Acceleration/deceleration unit	0: ms/kHz 1: s	0	C
352	Home-seeking mode	0: 2-sensor mode 1: 3-sensor mode 2: Push mode	1	B
353	Operating speed of home-seeking	1 to 1,000,000 Hz	1000	
354	Acceleration/deceleration of home-seeking	0.001 to 1000.000 ms/kHz or 0.001 to 1000.000 s	1.000	
355	Starting speed of home-seeking	1 to 1,000,000 Hz	500	
356	Position offset of home-seeking	−8,388,608 to 8,388,607 step	0	
357	Starting direction of home-seeking	0: Negative direction 1: Positive direction	1	

ID	Parameter name	Setting range	Initila value	Effective (p.134)
358	SLIT detection with home-seeking	0: Disable 1: Enable	0	B
359	TIM signal detection with home-seeking			
360	Operating current of home-seeking with push-motion	0.0 to 100.0%	100.0	
384	Overload alarm	0.1 to 30.0 s	5.0	A
385	Excessive position deviation alarm at current ON	0.01 to 300.00 rev	3.00	
388	Return-to-home incomplete alarm	0: Disable 1: Enable	0	C
416	Overheat warning	40 to 85 °C	85	A
417	Overload warning	0.1 to 30.0 s	5.0	
418	Overspeed warning	1 to 5000 r/min	4500	
419	Overvoltage warning	AC power input: 120 to 450 V DC power input: 150 to 630 (1=0.1 V)	AC power input: 435 DC power input: 630	
420	Undervoltage warning	AC power input: 120 to 280 V DC power input: 150 to 630 (1=0.1 V)	AC power input: 120 DC power input: 180	
421	Excessive position deviation warning at current ON	0.01 to 300.00 rev	3.00	
448	Electronic gear A	1 to 65535	1	C
449	Electronic gear B			
450	Motor rotation direction	0: Positive direction=CCW 1: Positive direction=CW	1	
451	Software overtravel	0: Disabel 1: Enable	1	A
452	Positive software limit	−8,388,608 to 8,388,607 step	8,388,607	
453	Negative software limit		−8,388,608	
454	Preset position		0	
455	Wrap setting	0: Disable 1: Enable	0	C
456	Wrap setting range	1 to 8,388,607 step	1000	
480	Data setter speed display	0: Signed 1: Absolute value	0	A
482	Absolute back-up system	0: Disable 1: Enable	0	C
2048	MS0 operation No. selection	0 to 63	0	B
2049	MS1 operation No. selection		1	
2050	MS2 operation No. selection		2	
2051	MS3 operation No. selection		3	
2052	MS4 operation No. selection		4	
2053	MS5 operation No. selection		5	
2054	HOME-P output function selection	0: Home output 1: Return-to-home complete output	0	A
2064	Filter selection	0: Speed filter 1: Moving average filter	0	C
2065	Speed difference gain 1	0 to 500	45	A
2066	Speed difference gain 2			
2067	Control mode	0: Normal mode 1: Current control mode	0	C
2068	Smooth drive	0: Disable 1: Enable	1	C
2080	Automatic return operation		0	

ID	Parameter name	Setting range	Initila value	Effective (p.134)
2081	Operation speed of automatic return	1 to 1,000,000 Hz	1000	B
2082	Acceleration (deceleration) of automatic return	0.001 to 1000.000 ms/kHz or 0.001 to 1000.000 s	1.000	
2083	Starting speed of automatic return	0 to 1,000,000 Hz	500	
2084	JOG travel amount	1 to 8,388,607 step	1	
2112	Excessive position deviation alarm at current OFF	0.01 to 300.00 rev	100.00	A
2176	IN0 input function selection	Refer to table on p.140.	3: HOME	C
2177	IN1 input function selection		4: START	
2178	IN2 input function selection		48: M0	
2179	IN3 input function selection		49: M1	
2180	IN4 input function selection		50: M2	
2181	IN5 input function selection		16: FREE	
2182	IN6 input function selection		18: STOP	
2183	IN7 input function selection		24: ALM-RST	
2192	IN0 input logic level setting	0: Make (N.O.) 1: Brake (N.C.)	0	
2193	IN1 input logic level setting			
2194	IN2 input logic level setting			
2195	IN3 input logic level setting			
2196	IN4 input logic level setting			
2197	IN5 input logic level setting			
2198	IN6 input logic level setting			
2199	IN7 input logic level setting			
2208	OUT0 output function selection	Refer to table on p.140.	70: HOME-P	
2209	OUT1 output function selection		69: END	
2210	OUT2 output function selection		73: AREA1	
2211	OUT3 output function selection		67: READY	
2212	OUT4 output function selection		66: WNG	
2213	OUT5 output function selection		65: ALM	
2224	NET-IN0 input function selection	Refer to table on p.140.	48: M0	C
2225	NET-IN1 input function selection		49: M1	
2226	NET-IN2 input function selection		50: M2	
2227	NET-IN3 input function selection		4: START	
2228	NET-IN4 input function selection		3: HOME	
2229	NET-IN5 input function selection		18: STOP	
2230	NET-IN6 input function selection		16: FREE	
2231	NET-IN7 input function selection		0: No function	
2232	NET-IN8 input function selection		8: MS0	
2233	NET-IN9 input function selection		9: MS1	
2234	NET-IN10 input function selection		10: MS2	
2235	NET-IN11 input function selection		5: SSTART	
2236	NET-IN12 input function selection		6: +JOG	
2237	NET-IN13 input function selection		7: –JOG	
2238	NET-IN14 input function selection		1: FWD	
2239	NET-IN15 input function selection		2: RVS	

ID	Parameter name	Setting range	Initila value	Effective (p.134)
2240	NET-OUT0 output function selection	Refer to table on p.140.	48: M0_R	C
2241	NET-OUT1 output function selection		49: M1_R	
2242	NET-OUT2 output function selection		50: M2_R	
2243	NET-OUT3 output function selection		4: START_R	
2244	NET-OUT4 output function selection		70: HOME-P	
2245	NET-OUT5 output function selection		67: READY	
2246	NET-OUT6 output function selection		66: WNG	
2247	NET-OUT7 output function selection		65: ALM	
2248	NET-OUT8 output function selection		80: S-BSY	
2249	NET-OUT9 output function selection		73: AREA1	
2250	NET-OUT10 output function selection		74: AREA2	
2251	NET-OUT11 output function selection		75: AREA3	
2252	NET-OUT12 output function selection		72: TIM	
2253	NET-OUT13 output function selection		68: MOVE	
2254	NET-OUT14 output function selection		69: END	
2255	NET-OUT15 output function selection		71: TLC	
2304	Communication timeout	0: Not monitored 1 to 10000 ms	0	A
2305	Communication error alarm	1 to 10 times	3	
2563	Communication parity	0: None 1: Even 2: Odd	1	C
2564	Communication stop bit	0: 1 bit 1: 2 bits	0	
2565	Transmission waiting time	0.0 to 1000.0 ms	10.0	

- **Setting range for function selection parameters**

IN input logic level setting

0: No function	8: MS0	18: STOP	35: R3	43: R11	51: M3
1: FWD	9: MS1	24: ALM-RST	36: R4	44: R12	52: M4
2: RVS	10: MS2	25: P-PRESET	37: R5	45: R13	53: M5
3: HOME	11: MS3	26: P-CLR	38: R6	46: R14	
4: START	12: MS4	27: HMI	39: R7	47: R15	
5: SSTART	13: MS5	32: R0	40: R8	48: M0	
6: +JOG	16: FREE	33: R1	41: R9	49: M1	
7: –JOG	17: C-ON	34: R2	42: R10	50: M2	

OUT output function selection

0: No function	10: MS2_R	35: R3	45: R13	61: –LS_R	72: TIM
1: FWD_R	11: MS3_R	36: R4	46: R14	62: HOMES_R	73: AREA1
2: RVS_R	12: MS4_R	37: R5	47: R15	63: SLIT_R	74: AREA2
3: HOME_R	13: MS5_R	38: R6	48: M0_R	65: ALM	75: AREA3
4: START_R	16: FREE_R	39: R7	49: M1_R	66: WNG	80: S-BSY
5: SSTART_R	17: C-ON_R	40: R8	50: M2_R	67: READY	82: MPS *
6: +JOG_R	18: STOP_R	41: R9	51: M3_R	68: MOVE	
7: –JOG_R	32: R0	42: R10	52: M4_R	69: END	
8: MS0_R	33: R1	43: R11	53: M5_R	70: HOME-P	
9: MS1_R	34: R2	44: R12	60: +LS_R	71: TLC	

* AC power input only.

NET-IN input function selection

0: No function	8: MS0	18: STOP	35: R3	43: R11	51: M3
1: FWD	9: MS1	24: ALM-RST *	36: R4	44: R12	52: M4
2: RVS	10: MS2	25: P-PRESET *	37: R5	45: R13	53: M5
3: HOME	11: MS3	26: P-CLR *	38: R6	46: R14	
4: START	12: MS4	27: HMI	39: R7	47: R15	
5: SSTART	13: MS5	32: R0	40: R8	48: M0	
6: +JOG	16: FREE	33: R1	41: R9	49: M1	
7: –JOG	17: C-ON	34: R2	42: R10	50: M2	

* It cannot be set in the driver that is before the specification change. Refer to p.7 for details.

NET-OUT output function selection

0: No function	10: MS2_R	35: R3	45: R13	61: –LS_R	72: TIM
1: FWD_R	11: MS3_R	36: R4	46: R14	62: HOMES_R	73: AREA1
2: RVS_R	12: MS4_R	37: R5	47: R15	63: SLIT_R	74: AREA2
3: HOME_R	13: MS5_R	38: R6	48: M0_R	65: ALM	75: AREA3
4: START_R	16: FREE_R	39: R7	49: M1_R	66: WNG	80: S-BSY
5: SSTART_R	17: C-ON_R	40: R8	50: M2_R	67: READY	82: MPS *
6: +JOG_R	18: STOP_R	41: R9	51: M3_R	68: MOVE	
7: –JOG_R	32: R0	42: R10	52: M4_R	69: END	
8: MS0_R	33: R1	43: R11	53: M5_R	70: HOME-P	
9: MS1_R	34: R2	44: R12	60: +LS_R	71: TLC	

* AC power input only.

3-9 Test mode

■ Overview of the test mode

- **Direct I/O test**

  You can check the ON/OFF status of each input signal of the driver. You can also switch the ON/OFF status of each output signal on the **OPX-2A**. When checking the connection condition of the driver, perform the direct I/O test.

- **JOG operation**

  You can operate the motor using the keys on the **OPX-2A**.

- **Data select operation**

  You can perform the positioning operation.

- **Return-to-home operation**

  You can perform the return-to-home operation.

- **Position preset**

  You can set the preset value as the command position.

- **Teaching**

  You can operate the motor using the keys on the **OPX-2A** and reflect the attained position in the operation data.

memo

- Stop the motor operation before changing to the test mode.
- When you move from the top screen of the test mode to a lower level, the following inputs will be disabled.
  START, SSTART, HOME, ±JOG, FWD, RVS and MS0 to MS5.
- In the direct I/O test, if the screen moves to the lower level, all of I/O signals and operation will be disabled.
- If the【SET】key is pressed while executing the internal processing via RS-485 communication, "mEm-bUSy" may be displayed. Check "3-5 Screen transitions" on p.126 when "mEm-bUSy" is displayed. Be sure to wait until all internal processing is completed, before pressing the【SET】key.
- If "Error" is displayed when data select operation, return-to-home operation, position preset or teaching function is performed, check whether an alarm generates.
- When the HMI input is OFF, test mode cannot be executed.

- **What happens when the【SET】key is pressed while the motor is operating**

  While the motor is operating, you cannot move to any lower level from the top screen of the test mode. Pressing the【SET】key will generate an error, and "oPE-Err" will be shown. Be sure to stop the motor operation before pressing the【SET】key.

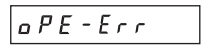

■ Direct I/O test

When checking the connection condition of the driver, perform the direct I/O test.
Each digit on the 7-segment LED display corresponds to a signal. The LED is lit when the input signal is ON, and it is unlit when the input signal is OFF.
Use the【↑】【↓】keys to switch the ON-OFF state of the output signal. "▫" is displayed when the signal is ON, while "–" is displayed when the signal is OFF.

- **Input signals**

Input signals test

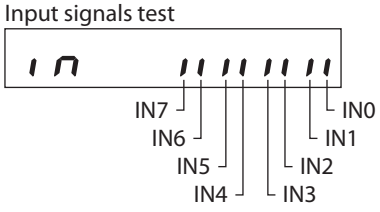

Sensor signals test

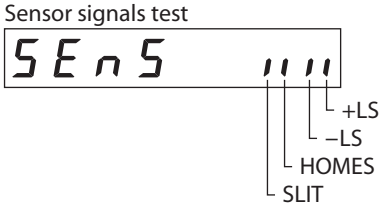

- **Output signals**

Output signals test

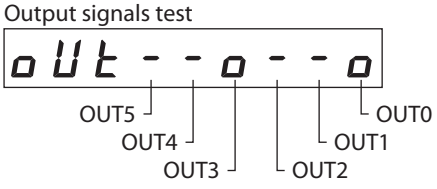

Use ← → to navigate through the digits.
Use ↑ ↓ to switch the ON/OFF status.
▫ indicates the ON status.
– indicates the OFF status.

■ JOG operation

You can operate the motor using the keys on the **OPX-2A**.
Pressing the【↑】key once causes the motor to rotate one step in the positive direction. Pressing and holding the key causes the motor to rotate continuously in the positive direction.
Pressing the【↓】key once causes the motor to rotate one step in the negative direction. Pressing and holding the key causes the motor to rotate continuously in the negative direction.

The operating speed corresponds to the value set in the "JOG operating speed" parameter.
Take note that when the value set in the "JOG starting speed" parameter is greater than the value set in the "JOG operating speed" parameter, the JOG starting speed will become effective.

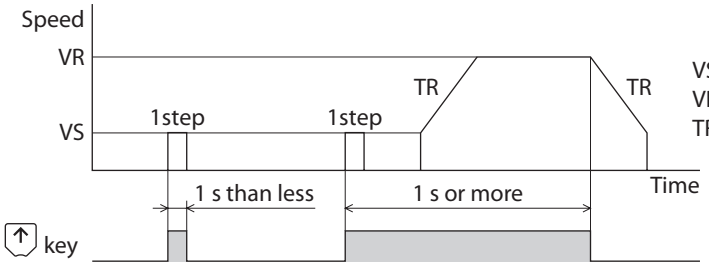

VS: JOG starting speed
VR: JOG operating speed
TR: Acceleration/deceleration rate of JOG

Note During operation, the motor rotates at the specified operating speed while each applicable key is pressed. Before commencing the operation, consider the status of the equipment and condition of its surroundings to confirm thoroughly that motor rotation will not cause any dangerous situations.

■ Data select operation

Select a desired operation data number and then press the【SET】key, and positioning operation will be performed.

Note During operation, the motor rotates at the specified operating speed. Before commencing the operation, consider the status of the equipment and condition of its surroundings to confirm thoroughly that motor rotation will not cause any dangerous situations.

■ Return-to-home operation

You can perform a return-to-home operation. The operating speed corresponds to the value set in the "operating speed of home-seeking" parameter.

Note During operation, the motor rotates at the specified operating speed. Before commencing the operation, consider the status of the equipment and condition of its surroundings to confirm thoroughly that motor rotation will not cause any dangerous situations.

■ Presetting the position

In this operation, the command position is preset by rewriting the value in the "preset position" parameter.

memo If operations are limited by the edit lock function, the preset cannot be performed.

■ Teaching

You can operate the motor using the keys on the **OPX-2A** and reflect the attained position in the operation data. The absolute mode will be automatically selected as the operation mode of any position data set by teaching.
The operating speed, acceleration/deceleration rate and starting speed of teaching are the same as the corresponding settings applicable to JOG operation.

Note During operation, the motor rotates at the specified operating speed. Before commencing the operation, consider the status of the equipment and condition of its surroundings to confirm thoroughly that motor rotation will not cause any dangerous situations.

memo If operations are limited by the edit lock function, the teaching cannot be performed.

3-10 Copy mode

■ Overview of the copy mode

- **Download**

  Data saved in the **OPX-2A** can be copied to the driver. If a download error occurs, a code indicating the description of the error will blink on the display. Download will not be performed and the display will return to the top screen of download. Refer to the following "Error of the copy mode" to display the error.

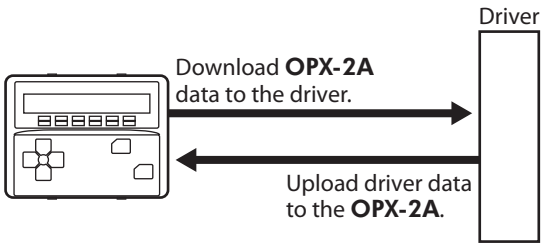

- **Upload**

  Data saved in the driver can be copied to the **OPX-2A**.

- **Verification**

  Data in the **OPX-2A** can be verified against the corresponding data in the driver.
  If the verification finds that the two sets of data match, "Good" will be shown. If the two do not match, "Error" will be shown.
  If a verification error occurs, a code indicating the description of the error will blink on the display. Verification will not be performed and the display will return to the top screen of verification. Refer to the following "Error of the copy mode" to display the error.

- **Initializing data**

  Data saved in the driver can be restored to the initial values.

- **What happens when the【SET】key is pressed while the edit lock function is enabled**

  While the edit lock function is enabled, you cannot move to any lower level from the top screen of the copy mode. Pressing the【SET】key will generate an error, and "LocK-Err" will be shown. Be sure to cancel the edit lock function before pressing the【SET】key. Refer to p.123 for the procedure to cancel the edit lock function.

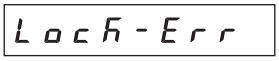

■ Error of the copy mode

If an error occurs in download or verification, the error code will blink on the display.
At this time, the processing will not be executed and the display will return to the top screen.

Blinking display	Description	Action
Prod-Err	There is a discrepancy between the selected product series and the data being processed.	• Check the product series. • Check the data bank number on the **OPX-2A**.
HEAd-Err bcc-Err	An error occurred while processing.	Execute the processing again. If the same error occurs, the data saved in the **OPX-2A** may have damaged. Upload and set the data of the **OPX-2A** again.
no-dAtA	The specified data bank number does not contain data.	Check the data bank number.

Note Do not turn off the driver power while processing is in progress (=while the display is blinking). Doing so may damage the data.

memo When a parameter that the power supply is required to turn on again for updating was changed by downloading, turn on the DC power supply of the driver again.

4 Inspection and maintenance

4-1 Inspection

It is recommended that periodic inspections be conducted for the items listed below after each operation of the motor. If an abnormal condition is noted, discontinue any use and contact your nearest office.

■ During inspection

- Check if any of the motor mounting screws come loose.
- Check if a bearing part (ball bearings) of the motor generates unusual noises.
- Check if any of the motor cable have a scratch or receive a stress. Check if the connection part with the driver comes loose.
- Check if the motor output shaft and the load shaft are out of alignment.
- Check if the openings in the driver blocked.
- Check if the connection part with the connector or the driver comes loose.
- Check if any attachment of dust, etc., on the driver.
- Check if any strange smells or appearances within the driver.

Note The driver uses semiconductor elements. Handle the driver with care since static electricity may damage semiconductor elements.

4-2 Warranty

Check on the Oriental Motor Website or General Catalog for the product warranty.

4-3 Disposal

Dispose the product correctly in accordance with laws and regulations, or instructions of local governments.

5 Alarms and warnings

The driver provides alarms that are designed to protect the driver from overheating, poor connection, error in operation, etc. (protective functions), as well as warnings that are output before the corresponding alarms generate (warning functions).

5-1 Alarms

When an alarm generates, the ALM output will turn OFF and the motor will stop. At the same time, the ALM LED (or ALARM LED) will start blinking.
The present alarm can be checked by counting the number of times the LED blinks, or using the **MEXE02**, **OPX-2A** or via RS-485 communication.

Example: Hardware overtravel alarm (number of blinks: 7)

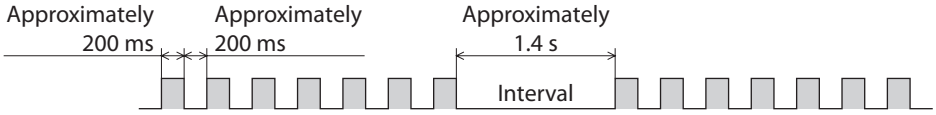

■ Alarm reset

Perform one of the reset operations specified below. Before resetting an alarm, always remove the cause of the alarm and ensure safety. Refer to p.313 for the timing chart.

- Turn the ALM-RST input from ON to OFF. (The alarm will be reset at the OFF edge of the input.)
- Perform an alarm reset via RS-485 communication.
- Perform an alarm reset using the **MEXE02** or **OPX-2A**.
- Cycle the power.

memo The absolute position error alarm can be reset by turning the P-CLR input from ON to OFF, or executing the reset of the absolute position error alarm using the **MEXE02**, **OPX-2A** or via RS-485 communication. This alarm cannot be reset by any other methods.

■ Alarm records

Up to 10 generated alarms are saved in the non-volatile memory in order of the latest to oldest.
Alarm records saved in the non-volatile memory can be read and cleared when performing any of the following.

- Read the alarm records by the monitor command via RS-485 communication.
- Clear the alarm records by the maintenance command via RS-485 communication.
- Read and clear the alarm records using the **MEXE02** or **OPX-2A**.

■ Alarm list

Code	No. of LED blinks	Alarm type	Cause
10h	4	Excessive position deviation	• When the motor was in a state of current on, the deviation between the command position and actual position exceeded the "excessive position deviation alarm at current ON" parameter. • The load is large, or the acceleration/deceleration is too short.
12h		Excessive position deviation during current OFF	The C-ON input was turned ON while an excessive position deviation warning during current OFF was present.
20h	5	Overcurrent *2	The motor, cable and driver output circuit were short-circuited.
21h	2	Main circuit overheat	The internal temperature of the driver exceeded 85 °C (185 °F).
22h	3	Overvoltage	• A voltage exceeding the specification value was applied. • A large inertial load was stopped abruptly or vertical operation was performed.
23h		Main power off *2	The motor was started when the main power supply had been cut off.
25h		Undervoltage	The main power was cut off momentarily or the voltage became low.
27h	7	Backup battery undervoltage	The battery voltage became below the rated value.
28h	8	Sensor error	A sensor error occurred while the motor was operating.
29h	9	CPU peripheral circuit error	An error occurred in the CPU.
2Dh	5	Main circuit output error *2	The motor cable was disconnected.
30h	2	Overload	A load exceeding the peak torque was applied for the time exceeded the "overload alarm" parameter.
31h		Overspeed	The rotation speed of the motor output shaft exceeded 4500 r/min.
33h	7	Absolute position error	While the "absolute back-up system" parameter was "enable," one of the following conditions is satisfied. • The power was turned on while the position origin was not set. • The power was turned on while the battery was not connected. • The power was turned on while operation range of multi-rotation was exceeded the specification.
			Sudden load fluctuations occurred when the position was managed with the battery.

Remedial action	Alarm reset	Motor excitation *1
• Reduce the load or increase the acceleration/deceleration. • If the driver is in the current control mode, increase the current limit value.	• Turn the ALM-RST input from ON (1) to OFF (0). • Perform alarm reset.	Excitation off
• Do not turn the C-ON input ON while an excessive position deviation warning at current OFF is present. • Set the "automatic return operation" prameter to “disable.”		
Turn off the power supply, and check that the motor, cable and driver output circuit are not short-circuited before turning on the power again.	Cycle the power.	
Review the ventilation condition in the enclosure.	• Turn the ALM-RST input from ON (1) to OFF (0). • Perform alarm reset.	
• Check the input voltage of the power supply. • If this alarm generates during operation, reduce the load or increase the acceleration/deceleration.	• Cycle the power. • Perform alarm reset (DC power input only).	
Check if the main power supply has been input normally.	• Turn the ALM-RST input from ON (1) to OFF (0). • Perform alarm reset.	
Check the input voltage of the main power supply.		
Charge the battery.		Excitation on
Turn off the power, and turn on the power again after checking the connection for the motor cable and driver.	Cycle the power.	Excitation off
• If a battery is used, turn off the power before disconnecting it. After that, connect the battery again, and turn on the power. Check an alarm does not generate, and be sure to perform return-to-home operation. • If a battery is not used, turn on the power again. After that, check an alarm does not generate, and be sure to perform return-to-home operation.		
Turn off the power, and turn on the power again after checking the connection for the motor cable and driver.		
• Reduce the load or increase the acceleration/deceleration. • If the driver is in the current control mode, increase the current limit value. • Check the connection of the driver and electromagnetic brake.	• Turn the ALM-RST input from ON (1) to OFF (0). • Perform alarm reset.	
• Check the "electronic gear" parameter and set the speed of the motor output shaft to 4500 r/min or less. • If the motor is overshooting at the time of acceleration, increase the acceleration.		
• Execute P-PRESET or return-to-home operation after inputting the P-CLR. • Check the connection of the battery. Or change the battery.	• Turn the P-CLR input from ON (1) to OFF (0). • Perform the reset of the absolute position error alarm.	Excitation on
Do not apply sudden load fluctuations.		

Code	No. of LED blinks	Alarm type	Cause
34h	2	Command pulse error	The command pulse frequency exceeded the specified value.
41h	9	EEPROM error	The stored data was damaged.
42h	8	Initial sensor error	A sensor error occurred when the power was turned on.
43h		Initial rotor rotation error	The motor output shaft did not stand still when the power was turned on.
45h		Motor combination error	A motor not supported by the driver is connected.
4Ah	7	Return-to-home incomplete	The positioning operation was started when the position origin has not been set.
51h	2	Regeneration resistor overheat *2	• The regeneration resistor is not connected correctly. • The regeneration resistor was overheated abnormally.
60h	7	±LS both sides active	Both the +LS input and –LS input were detected when LS detection was enabled.
61h		Reverse limit sensor connection	The limit sensor opposite to the operating direction has detected during a return-to-home operation in 2-sensor mode or 3-sensor mode.
62h		Home seeking error	Return-to-home operation did not complete normally.
63h		No HOMES	The mechanical home sensor is not detected at a position between +side limit sensor and –side limit sensor during return-to-home operation in 3-sensor mode.
64h		TIM, Z, SLIT signal error	None of the SLIT input or TIM output could be detected during return-to-home operation.
66h		Hardware overtravel	A +LS input or –LS input signal was detected when the "hardware overtravel" parameter was enabled.
67h		Software overtravel	A software limit was reached when the "software overtravel" parameter was enabled.
6Ah		Home seeking offset error	A limit sensor was detected during offset movement as part of return-to-home operation.

Remedial action	Alarm reset	Motor excitation *1
Check the "electronic gear" parameter and reduce the speed of the motor output shaft to 4500 r/min or less.	• Turn the ALM-RST input from ON (1) to OFF (0). • Perform alarm reset.	Excitation off
Initialize the all parameters.	Cycle the power.	
Turn off the power supply, and check the connection of the motor cable and driver before turning on the power again.		
Make sure the motor output shaft does not turn by an external force when the power is turned on.		
Check the model name of motor and driver, and use the motor and driver in the correct combination.		
Perform the position preset or return-to-home operation.	• Turn the ALM-RST input from ON (1) to OFF (0). • Perform alarm reset.	Excitation on
Turn off the power supply, and check the following items before turning on the power again. • When the regeneration resistor is not used, short-circuit the TH1 and TH2 terminals on the CN1. • Connect the regeneration resistor correctly. • Regenerative power from the motor exceeds the allowable regenerative power of the regeneration resistor. Make sure the load and operating condition.	Cycle the power.	Excitation off
Reset alarm using the ALM-RST input, and then check the sensor logic and "LS contact configuration" parameter.	• Turn the ALM-RST input from ON (1) to OFF (0). • Perform alarm reset.	Excitation on
Reset alarm using the ALM-RST input, and then check the limit sensor wiring.		
• An unanticipated load may have been applied during the return-to-home operation. Check the load. • If the installation positions of limit sensor and mechanical home sensor are close to one another, the return-to-home sequence may not end properly, depending on the starting direction of return-to-home operation. Review the sensor installation positions and the starting direction of return-to-home operation. • Return-to-home operation may have been performed in a condition where both +LS input and −LS input were detected. Check the sensor logic and "LS contact configuration" parameter.		
Set a mechanical home sensor between +side and −side limit sensors.		
• Adjust the connection condition of the motor output shaft and load as well as the mechanical home sensor position so that at least one of the SLIT input or TIM output will turn ON while HOMES input is ON. • Set the "SLIT detection with home-seeking" parameter to "disable" if the SLIT input are not used with HOMES, while set the "TIM signal detection with home-seeking" parameter to "disable" if the TIM output are not used with HOMES.		
Reset alarm using the ALM-RST input, and then pull out from the limit sensor via continuous operation or return-to-home operation.		
In single-motion operation, check to see if the position exceeds the softlimit. In linked-motion operation, check to see if the result of linked position exceeds the softlimit.		
Reset alarm using the ALM-RST input, and then check the offset value.		

Code	No. of LED blinks	Alarm type	Cause
70h	7	Abnormal operation data	• Data of different directions may be linked in linked-motion operation. • Five or more data may be linked. • Positioning operation of the operating speed 0 r/min was performed. • The larger value than 500 r/min was set in the operating speed of push-motion operation. *3
71h		Electronic gear setting error	The resolution set in the "electronic gear" parameter was outside of the specification.
72h		Wrap setting error	The resolution and "wrap setting range" parameter was inconsistent.
81h		Network bus error	When the motor operates, the master controller for the network converter shows a disconnected status.
83h		Communication switch setting error	Transmission rate setting switch (SW2) was out-of-specification.
84h		RS-485 communication error	The number of consecutive RS-485 communication errors reached the "communication error alarm" parameter.
85h		RS-485 communication timeout	The time set in the "communication timeout" parameter has elapsed, and yet the communication could not be established with the master controller.
8Eh		Network converter error	The network converter generated an alarm.
F0h	Lit	CPU error	CPU malfunctioned.

*1 When an alarm generates, the motor operates as follows.
Excitation off: When an alarm generates, the motor current will be cut off and the motor will lose its holding torque. The electromagnetic brake will automatically actuate and hold the position when using the electromagnetic brake motor.
Excitation on: Even when an alarm generates, the motor current will not be cut off and the motor position will be held.
*2 AC power input only.
*3 For the driver which is before the specification change, the maximum speed of push-motion operation is 30 r/min. Refer to p.7 for details.

If the alarm is not cleared even when these remedial actions have been performed, the driver may have been damaged. Contact your nearest Oriental Motor sales office.

Remedial action	Alarm reset	Motor excitation *1
Reset alarm using the ALM-RST input, and then check the operation data.	• Turn the ALM-RST input from ON (1) to OFF (0). • Perform alarm reset.	Excitation on
Turn off the power supply, and set the "electronic gear" parameter correctly so that the resolution is in a range of 100 to 10000 P/R before turning on the power again.	Cycle the power.	Excitation off
Turn off the power supply, and set the "wrap setting range" parameter correctly before turning on the power again.		
Check the master controller connector or cable.	• Turn the ALM-RST input from ON (1) to OFF (0). • Perform alarm reset.	Excitation on
Check the transmission rate setting switch (SW2).	Cycle the power.	Excitation off
• Check the connection between the master controller and driver. • Check the setting of RS-485 communication.	• Turn the ALM-RST input from ON (1) to OFF (0). • Perform alarm reset.	Excitation on
Check the connection between the master controller and driver.		
Check the alarm code of the network converter.		
Cycle the power.	Cycle the power.	Excitation off

5-2 Warning

When a warning generates, the WNG output will turn ON. The motor will continue to operate.
Once the cause of the warning is removed, the WNG output will turn OFF automatically.

■ Warning records

Up to 10 generated warnings are saved in the RAM in order of the latest to oldest.
Warning records saved in the RAM can be read and cleared when performing any of the following.

- Read the warning records by the monitor command via RS-485 communication.
- Clear the warning records by the maintenance command via RS-485 communication.
- Read and clear the warning records using the **MEXE02** or **OPX-2A**.

memo You can also clear the warning records by turning off the driver power.

■ Warning list

Code	Warning type	Cause	Remedial action
10h	Excessive position deviation	• When the motor was in a state of current ON, the deviation between the command position and actual position exceeded the "excessive position deviation warning at current ON" parameter. • The load is large or acceleration/deceleration is too short.	• Reduce the load or increase the acceleration/deceleration. • If the driver is in the current control mode, increase the current limit value.
12h	Excessive position deviation during current OFF	When the motor was in a state of current OFF, the deviation between the command position and actual position exceeded the "excessive position deviation alarm at current OFF" parameter. (This warning is output when the "auto return operation" parameter is set to "enable".)	Reduce the amount of rotation at current OFF to the specified setting value or less. Or, change the setting value.
21h	Main circuit overheat	The temperature inside the driver exceeded the "overheat warning" parameter.	Review the ventilation condition in the enclosure.
22h	Overvoltage	• The voltage of the power supply exceeded the "overvoltage warning" parameter. • A large inertial load was stopped abruptly or vertical operation was performed.	• Check the input voltage of the power supply. • If this alarm generates during operation, reduce the load or increase the acceleration/deceleration.
25h	Undervoltage	• The power supply voltage dropped from the "undervoltage warning" parameter. • The main power was cut off momentarily or the voltage became low.	Check the input voltage of the power supply.
30h	Overload	• A load exceeding the peak torque was applied for the time set in the "overload warning" parameter or longer. • The load is large or acceleration/deceleration is too short.	• Reduce the load or increase the acceleration/deceleration. • If the driver is in the current control mode, increase the current limit value. • Check the connection between the driver and electromagnetic brake.
31h	Overspeed	The detected motor speed exceeded the "overspeed warning" parameter.	• Check the "electronic gear" parameter and reduce the speed of the motor output shaft to the value set in the parameter or less. • If the motor is overshooting in acceleration, increase the acceleration/deceleration.
48h	Battery connection error	The battery was unconnected while the "absolute back-up system" parameter was "enable."	Check the battery connection.

Code	Warning type	Cause	Remedial action
71h	Electronic gear setting error	The resolution set in the "electronic gear" parameter is outside the specified range.	Turn off the power supply, and set the "electronic gear" parameter correctly so that the resolution is in a range of 100 to 10000 P/R before turning on the power again.
72h	Wrap setting error	The resolution and "wrap setting range" parameter was inconsistent.	Turn off the power supply, and set the "wrap setting range" parameter correctly before turning on the power again.
84h	RS-485 communication error	A RS-485 communication error was detected.	• Check the connection between the master controller and driver. • Check the setting of RS-485 communication.

5-3 Communication errors

Up to 10 communication errors are saved in the RAM in order of the latest to the oldest and you can check using the **MEXE02** or via RS-485 communication.

■ Communication error records

Up to 10 communication errors are saved in the RAM in order of the latest to oldest.
Communication error records saved in the RAM can be read and cleared when performing any of the following.

- Read the communication error records by the monitor command via RS-485 communication.
- Clear the communication error records by the maintenance command via RS-485 communication.
- Read and clear the communication error records by the status monitor of the **MEXE02**.

memo You can also clear the communication records by turning off the driver power.

■ Communication error list

Code	Communication error type	Cause	Remedial action
84h	RS-485 communication error	One of the following errors was detected. · Framing error · BCC error	• Check the connection between the master controller and driver. • Check the setting of RS-485 communication.
88h	Command not yet defined	The command requested by the master controller could not be executed because of being undefined.	• Check the setting value for the command. • Check the flame configuration.
89h	Execution disable due to user I/F communication in progress	The command requested by the master controller could not be executed since the **MEXE02** or **OPX-2A** was communicating with the driver.	Wait until the processing for the **MEXE02** or **OPX-2A** will be completed.
8Ah	Not possible to execute because of non-volatile memory processing	The command could not be executed because the driver was processing the non-volatile memory. · Internal processing was in progress. (S-BSY is ON.) · An EEPROM error alarm was present.	• Wait until the internal processing will complete. • When the EEPROM error was generated, initialize the parameter using the **MEXE02**, **OPX-2A** or via RS-485 communication.
8Ch	Outside setting range	The setting data requested by the master controller could not be executed due to outside the range.	Check the setting data.
8Dh	Command execute disable	When the command could not be executed, it tried to do it.	Check the driver status.

6 Troubleshooting and remedial actions

During motor operation, the motor or driver may fail to function properly due to an improper speed setting or wiring. When the motor cannot be operated correctly, refer to the contents provided in this section and take appropriate action. If the problem persists, contact your nearest Oriental Motor sales office.

Phenomenon	Possible cause	Remedial action
• The motor is not excited. • The motor output shaft can be moved by hand.	The C-ON input is turned OFF.	Turn the C-ON input ON and confirm that the motor will be excited.
	The FREE input is turned ON.	Turn the FREE input OFF.
There is holding torque even if motor excitation is turned OFF. *	Effect of dynamic brake.	If motor excitation is turned OFF by the C-ON input or STOP input, the motor windings will be in a state of being short-circuited inside the driver, and the holding torque will be generated larger than when the power is shut off (dynamic brake). To release the dynamic brake, shut off the power or turn the FREE input ON.
The motor does not operate.	An electromagnetic brake motor is used and the electromagnetic brake is in the holding state.	Check the connections between electromagnetic brake and driver.
	The STOP input is turned ON.	Turn the STOP input OFF.
	The position (distance) is not set in the operation data while positioning operation.	Check the operation data.
	The FWD input and RVS input are turned ON simultaneously in the continuous operation.	Turn either FWD input or RVS input ON.
The motor rotates in the direction opposite to the specified direction.	The "motor rotation direction" parameter is set wrong.	Check the "motor rotation direction" parameter.
The gear output shaft rotates in the direction opposite to the motor.	A gear that rotates in the direction opposite to the motor shaft is used.	• With **TH** geared type, the gear output shaft rotates in the direction opposite to the motor when the gear ratio is 20 or 30. • With Harmonic geared type, the gear output shaft always rotates in the direction opposite to the motor.
Motor operation is unstable.	Connection error in the motor or power supply.	Check the connections between the driver, motor and power supply.
	The "RUN current" or "STOP current" parameter is too low.	Return the "RUN current" or "STOP current" parameter to its initial setting and check the motor operation. If the operating current is too low, the motor torque will also be too low and operation will be unstable.
Motor vibration is too large.	Load is too small.	Lower the operating current using the "RUN current" parameter. Vibration will increase if the motor's output torque is too large for the load.
The electromagnetic brake does not release.	The power is not supplied to the electromagnetic brake.	Check the connections between electromagnetic brake and driver.

* DC power input only.

memo

- Check the alarm when the alarm generates.
- I/O signals can be monitored using the **MEXE02**, **OPX-2A** or via RS-485 communication. Use to check the wiring condition of the I/O signals.

5 Operation type and setting

This part explains the details of operation and how to set the driver function.

◆Table of contents

1 Guidance 156

2 Adjustment and setting 160

2-1 Resolution 160
2-2 Operating current 161
2-3 Standstill current 161
2-4 Acceleration/deceleration rate and acceleration/deceleration time 162
2-5 Smooth drive 162
2-6 Speed filter 163
2-7 Moving average filter 164
2-8 Speed error gain 164
2-9 Control mode 165
2-10 Position loop gain, speed loop gain, speed loop integral time constant 165
2-11 Absolute-position backup system 166

3 Operation type and function list 167

4 Positioning operation 168

4-1 Operation data 168
4-2 Starting method of positioning operation 170
4-3 Operation function 175
4-4 Push-motion operation 179

5 Return-to-home operation 182

5-1 Operation sequence 185
5-2 Position preset 189

6 Continuous operation 190

6-1 Starting method of continuous operation 191
6-2 Variable speed operation 193

7 Other operation 195

7-1 JOG operation 195
7-2 Test operation 196
7-3 Automatic return operation 197
7-4 Stop operation 198

8 Coordination management 200

8-1 Position coordinate management 200
8-2 Wrap function 201

1 Guidance

If you are new to the **AR** Series built-in controller type, read this section to understand the operating methods along with the operation flow.
This section explains an example to perform positioning operation using the **MEXE02**.

STEP1	**Make preparations for operation**
↓	
STEP2	**Set the operation data using the MEXE02**
↓	
STEP3	**Operate the motor**

■ Checking the factory setting

Setting item	Factory setting
Resolution	1000 P/R (0.36°/step)
Operating current	1000 (Base current rate 100%)
Speed filter	1 ms
Home position	Motor position at power on

Note Before operating the motor, check the condition of the surrounding area to ensure safety.

STEP 1 Make preparations for operation

1. Wire the driver by reference to the figure.

- **AC power input**

  Be sure to connect a 24 VDC power supply.

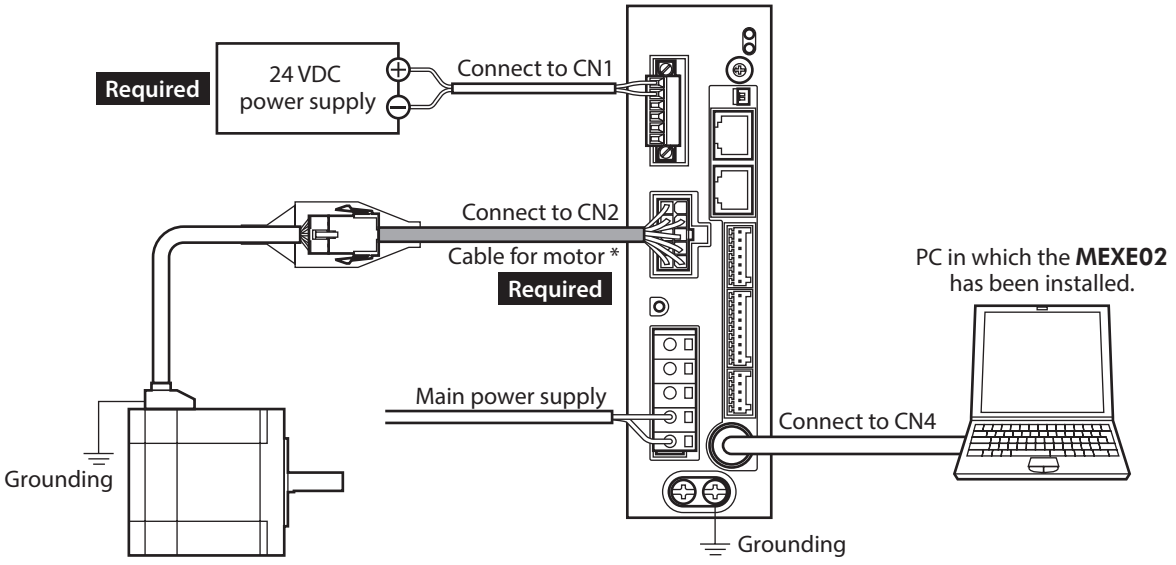

* Cables represented in gray color are supplied with the product or sold separately.

● **DC power input**

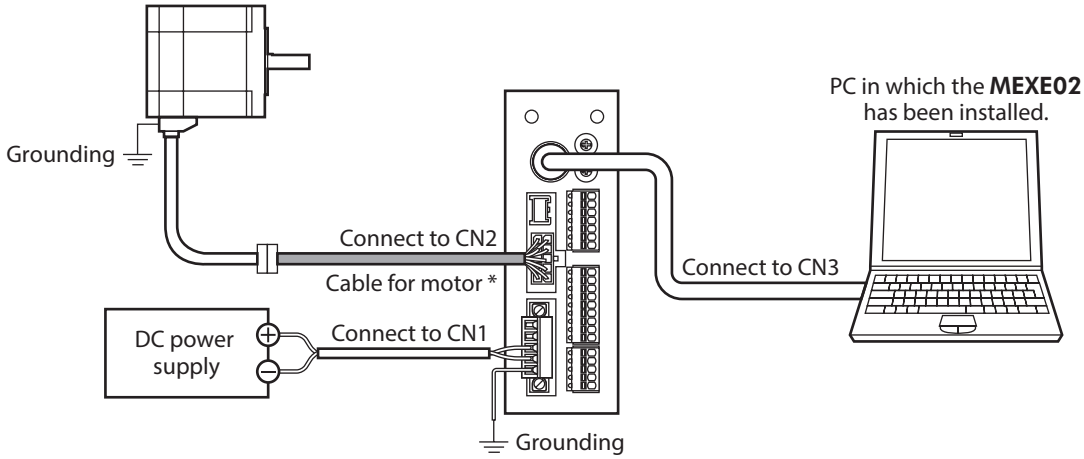

* Cables represented in gray color are supplied with the product or sold separately. Use when the cable length is not long enough.

2. Start the **MEXE02**, and turn on the driver main power supply.
   Refer to the "Support software **MEXE02** OPERATING MANUAL" for how to start or use the **MEXE02**.

STEP 2 Set the operation data using the MEXE02

1. Using the **MEXE02**, set the operation data of No.1 as follows.

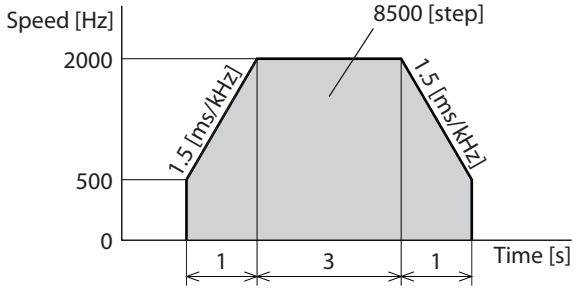

	Operation mode	Position [step]	Operating speed [Hz]	Operation function	Push current [%]	Dwell time [s]	Sequential positioning	Acceleration [ms/kHz] or [s]	Deceleration [ms/kHz] or [s]
#0	Incremental (INC)	0	1000	Single-motion	20.0	0.000	Disable	1.000	1.000
#1	Incremental (INC)	8500	2000	Single-motion	20.0	0.000	Disable	1.500	1.500

2. Click the [Teaching, remote operation] short-cut button in the left side of the screen.
   The teaching, remote operation window appears.

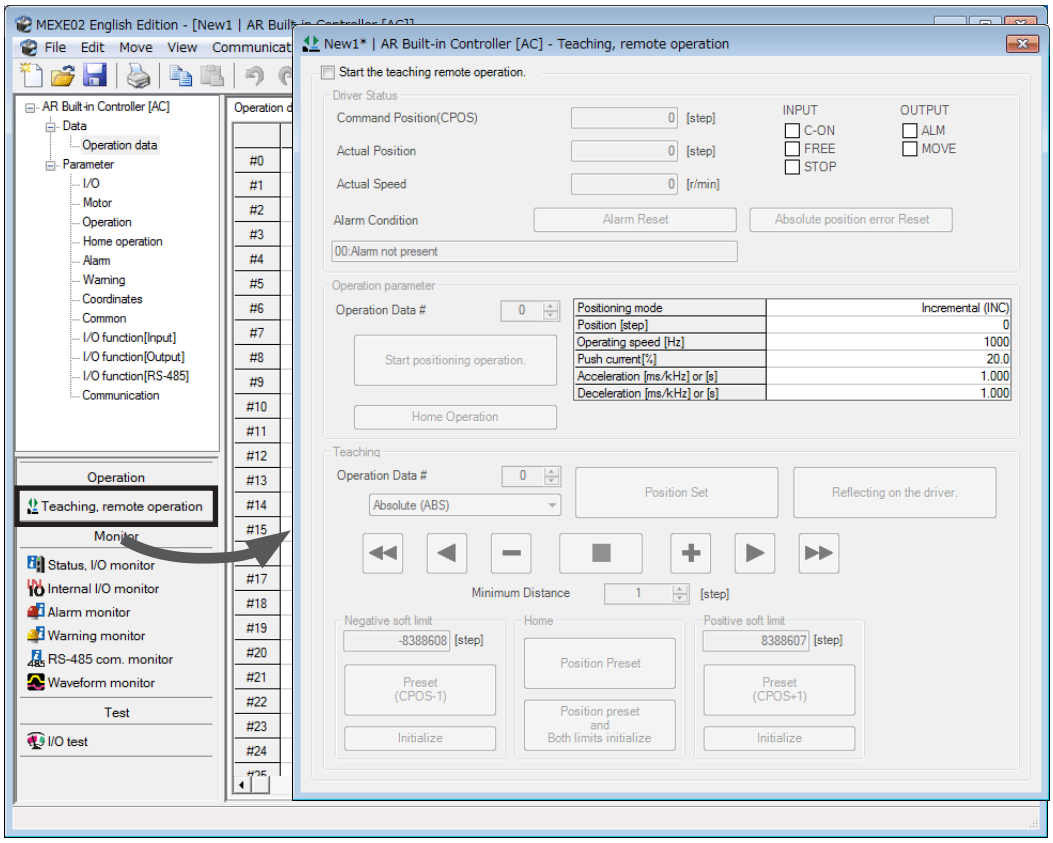

3. Click the "Start the teaching remote operation," and click [Yes] on the pop-up window (Warning).

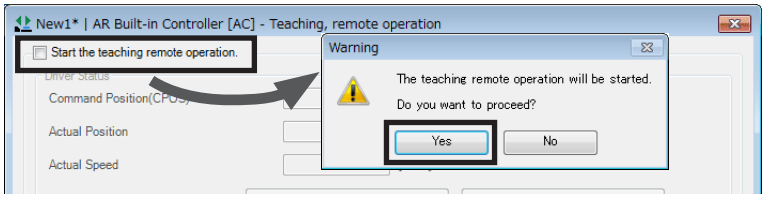

4. Write the edited data to the driver.
   Click "Writing all data. (PC –> Product)," and click [OK].
   The contents of the data No.1 will be written to the driver.

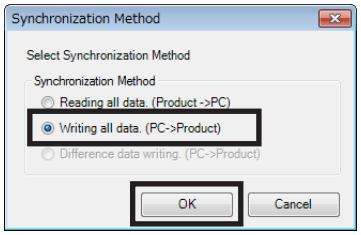

5. Select the operation data No.1.

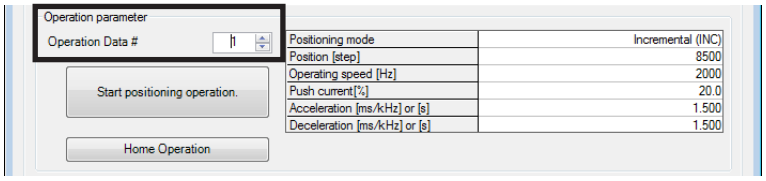

STEP 3 Operate the motor

1. Click [Start positioning operation].
   Since the pop-up window (Warning) is displayed, click [Yes].
   The motor performs positioning operation.

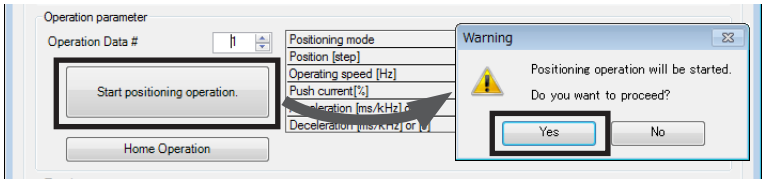

2. Check that the command position and actual position have changed to 8500.
   If they are 8500, positioning operation is performed properly.

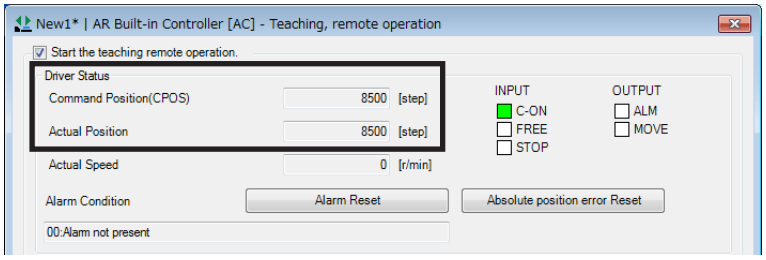

3. To end the teaching, remote operation, unselect "Start the teaching remote operation."

Positioning operation has been completed.

2 Adjustment and setting

This chapter explains how to adjust/set the motor and driver functions. When a parameter is changed, the timing to enable the new value varies depending on the parameter. Refer p.112 for details.

2-1 Resolution

Set a resolution when using in combination with a mechanism product such as a geared motor or an actuator.When the "electronic gear A" and "electronic gear B" parameters are set, the resolution per one rotation of the motor output shaft can be set. Note that the calculated value must fall within the setting range specified below:
Resolution setting range: 100 to 10000 P/R

$$\text{Resolution} = 1000 \times \frac{\text{Electronic gear B}}{\text{Electronic gear A}}$$

Related parameters

MEXE02 tree view	Parameter name	Description	Initial value
Coordinates	Electronic gear A	Sets the denominator of electric gear. **[Setting range]** 1 to 65535	1
	Electronic gear B	ets the numerator of electric gear. **[Setting range]** 1 to 65535	1

memo

- If the value outside of the setting range is set, the "electronic gear setting error warning" will generate. If the power is cycled or the configuration is executed while the "electronic gear setting error warning" is present, an "electronic gear setting error alarm" will generate.
- If the resolution was changed while the absolute-position backup system was in enable status, perform the return-to-home operation or P-PRESET.
- When the TIM output is used, set the "electronic gear" parameters to be an integral multiple of 50.

■ Calculation of electronic gear A and B

Calculation of electronic gear A and B is explained with examples of a ball screw and rotary table.

- **Example: Ball screw**

Ball screw lead : 12 mm
Minimum travel amount : 0.01 mm
Gear ratio : 1 (No speed reduction mechanism between the motor and ball screw)

$$\text{Resolution} = 1000 \times \frac{\text{Electronic gear B}}{\text{Electronic gear A}} = \frac{\text{Ball screw lead}}{\text{Minimum travel amount}} \times \text{Gear ratio}$$

$$\text{In this example: } 1000 \times \frac{\text{Electronic gear B}}{\text{Electronic gear A}} = \frac{12\ \text{mm}}{0.01\ \text{mm}} \times 1$$

$$\text{Result: } \frac{\text{Electronic gear B}}{\text{Electronic gear A}} = \frac{12}{10} = \frac{6}{5}$$

Therefore, the electronic gear A and B are 5 and 6 respectively, and the resolution will be 1200 P/R.

- **Example: Rotary table**

  Step angle per one rotation : 360°
  Minimum step angle : 0.01°
  Gear ratio : 10 [Using the geared motor (gear ratio 10:1)]

  $$\text{Resolution} = 1000 \times \frac{\text{Electronic gear B}}{\text{Electronic gear A}} = \frac{\text{Minimum step angle}}{\text{Step angle per one rotation}} \times \text{Gear ratio}$$

  $$\text{In this example: } 1000 \times \frac{\text{Electronic gear B}}{\text{Electronic gear A}} = \frac{360°}{0.01°} \times \frac{1}{10}$$

  $$\text{Result: } \frac{\text{Electronic gear B}}{\text{Electronic gear A}} = \frac{36}{10} = \frac{18}{5}$$

  Therefore, the electronic gear A and B are 5 and 18 respectively, and the resolution will be 3600 P/R.

2-2 Operating current

The maximum driver operating current can be changed using the "RUN current" parameter. If the load is small and there is an ample allowance for torque, the motor temperature rise can be suppressed by setting a lower operating current.

Related parameters

MEXE02 tree view	Parameter name	Description	Initial value
Motor	RUN current	Sets the motor operating current based on the rated current being 100%. **[Setting range]** 0 to 1000 (1=0.1%)	1000

Note Excessively low operating current may cause a problem in starting the motor or holding the load in position. Do not lower the operating current more than necessary.

2-3 Standstill current

When the motor stops, the current cutback function will be actuated to lower the motor current to the standstill current. The standstill current is a value in which the set value of the "STOP current" parameter is multiplied by the rated current (100%). The standstill current does not change even when the "RUN current" parameter has been changed.

Related parameters

MEXE02 tree view	Parameter name	Description	Initial value
Motor	STOP current	Sets the motor standstill current as a percentage of the rated current, based on the rated current being 100%. **[Setting range]** 0 to 500 (1=0.1%)	500

2-4 Acceleration/deceleration rate and acceleration/deceleration time

■ Acceleration/deceleration unit

Set the acceleration/deceleration unit using the "acceleration/deceleration unit" parameter.
Acceleration/deceleration rate (ms/kHz) or acceleration/deceleration time (s) can be set.

• Acceleration/deceleration unit: ms/kHz

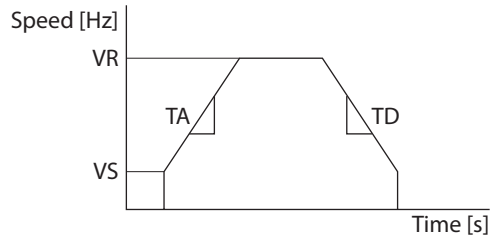

• Acceleration/deceleration unit: s

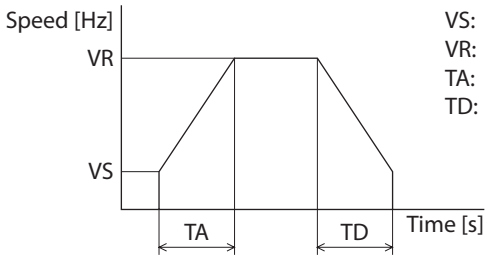

VS: Starting speed
VR: Operating speed
TA: Acceleration
TD: Deceleration

Related parameter

MEXE02 tree view	Parameter name	Description	Initial value
Operation	Acceleration/ deceleration unit	Sets the acceleration/deceleration unit. **[Setting range]** 0: ms/kHz 1: s	0

■ Common setting and separate setting of the acceleration/deceleration

The acceleration/deceleration for positioning operation or continuous operation can be set as follows using the "acceleration/deceleration type" parameter:
Separate: The acceleration/deceleration set under the applicable operation data No. will be followed.
Common: The setting of the "common acceleration" and "common deceleration" parameters will be followed.

memo

- When performing linked operation, the acceleration/deceleration for the starting linked operation data No. is applied even when the "acceleration/deceleration type" parameter is set to "separate".
- See p.193 for the acceleration/deceleration when performing variable speed operation.

Related parameter

MEXE02 tree view	Parameter name	Description	Initial value
Operation	Acceleration/ deceleration type	Sets whether to use the common acceleration/ deceleration or the acceleration/deceleration specified for the operationdata. **[Setting range]** 0: Common 1: Separate	1

2-5 Smooth drive

You can achieve lower vibration and smoother movement using the smooth drive function.
You may feel vibration in the low speed range when this function is set to "disable." Set the function to "enable" under normal conditions of use.

Related parameter

MEXE02 tree view	Parameter name	Description	Initial value
Motor	Smooth drive	Sets whether to enable or disable smooth drive function. **[Setting range]** 0: Disable 1: Enable	1

2-6 Speed filter

If the "filter selection" parameter is set to "speed filter," the motor response can be adjusted with the "speed filter" parameter.
When the speed filter level is raised, vibration can be suppressed during low-speed operation, and starting/stopping of the motor will become smooth. Note, however, that an excessively high filter level will result in lower synchronicity with commands. Set an appropriate value according to the specific load and purpose.

Related parameter

MEXE02 tree view	Parameter name	Description	Initial value
Motor	Filter selection	Sets the filter function to adjust the motor response. **[Setting range]** 0: Speed filter 1: Moving average filter	0
	Speed filter	Adjusts the motor response. **[Setting range]** 0 to 200 ms	1

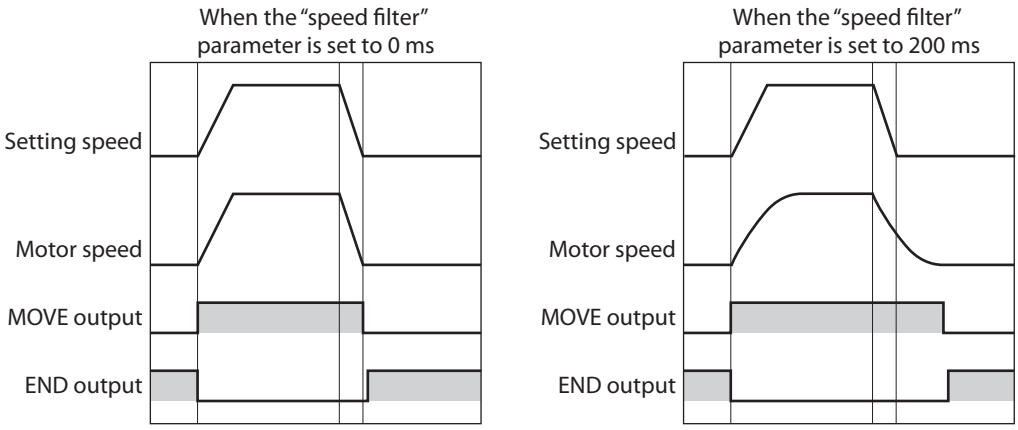

memo When setting the value of the "speed filter" parameter to "0," this function will be invalid.

2-7 Moving average filter

The motor response can be adjusted when setting the "filter selection" parameter to "moving average filter" and setting the value for the "moving average time" parameter.
The positioning time can be shortened by suppressing the residual vibration for the positioning operation.
Optimum value for the "moving average time" parameter varies depending on the load or operation condition. Set a suitable value based on the load or application.

Related parameter

MEXE02 tree view	Parameter name	Description	Initial value
Motor	Filter selection	Sets the filter function to adjust the motor response. **[Setting range]** 0: Speed filter 1: Moving average filter	0
	Moving average time	Sets the time constant for the moving average filter. **[Setting range]** 1 to 200 ms	1

	When the moving average filter is not used.	When the "moving average time" parameter is set to 200 ms.
Rectangular operation	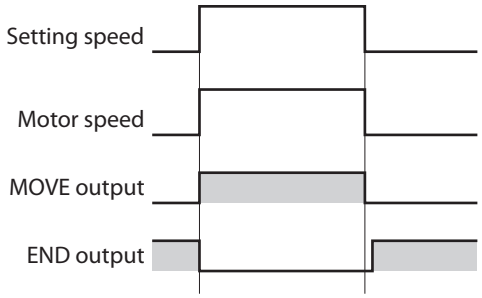	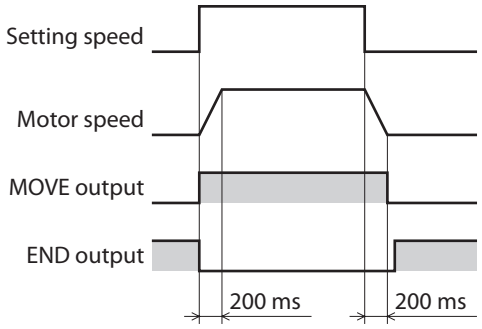
Trapezoidal operation	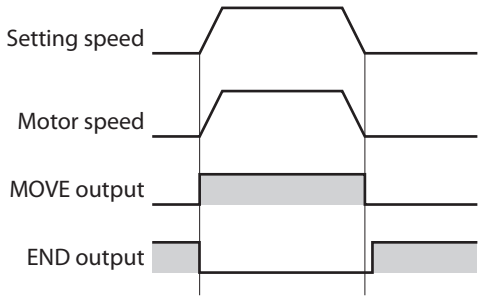	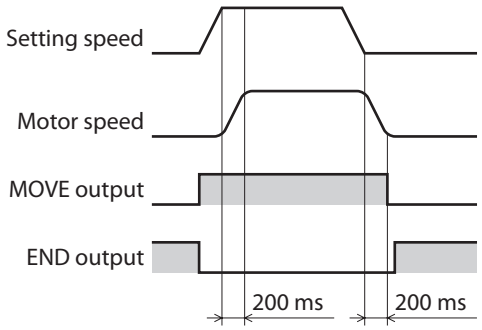

2-8 Speed error gain

The speed error gain is used to suppress vibration while the motor is operating or accelerating/decelerating.

Related parameter

MEXE02 tree view	Parameter name	Description	Initial value
Motor	Speed difference gain 1	Adjusts vibration during operation. **[Setting range]** 0 to 500	45
	Speed difference gain 2	Adjusts vibration during acceleration/deceleration. **[Setting range]** 0 to 500	45

2-9 Control mode

The driver operates in one of two control modes: the normal mode, and the current control mode. If noise is heard during high-speed operation or there is notable vibration, it may be effective to switch to the current control mode. Note, however, that a slight delay may occur in the current control mode, compared to the normal mode, depending on the condition of the load. Keep the driver in the normal mode during normal conditions of use.

Related parameter

MEXE02 tree view	Parameter name	Description	Initial value
Motor	Control mode	Sets the control mode of the driver. **[Setting range]** 0: Normal mode 1: Current control mode	0

2-10 Position loop gain, speed loop gain, speed loop integral time constant

These items are effective in the current control mode.
Vibration that occurs while the motor is accelerating/decelerating or at standstill can be adjusted to an optimal value. (The optimal value varies depending on the equipment and operating conditions.)

Related parameter

MEXE02 tree view	Parameter name	Description	Initial value
Motor	Position loop gain	Adjusts the motor response in reaction to the position deviation. When this value is increased, the deviation between the command position and actual position will be small. An excessively high value may increase the motor overshooting or cause motor hunting. **[Setting range]** 1 to 50	10
	Speed loop gain	Adjusts the motor response in reaction to the speed deviation. When this value is increased, the deviation between the command speed and actual speed will be small. An excessively high value may increase the motor overshooting or cause motor hunting. **[Setting range]** 10 to 200	180
	Speed loop integral time constant	Adjusts the deviation that cannot be adjusted with the speed loop gain. An excessively high value may slow the motor response. On the other hand, an excessively low value may cause motor hunting. **[Setting range]** 100 to 2000 (1=0.1 ms)	1000

2-11 Absolute-position backup system

This product can be used in the absolute-position backup mode when connecting an accessory battery set. Since the absolute position can be kept during an electrical outage or after turning off the power, the return-to-home operation is not required when the power is turned on. Refer to p.54 (AC power input), p.84 (DC power input) for accessory.

Related parameter

MEXE02 tree view	Parameter name	Description	Initial value
Common	Absolute back-up system	Sets whether to enable or disable absolute-position backup system. **[Setting range]** 0: Disable 1: Enable	0

■ Setting of the absolute-position backup system

1. Turn off the driver main power and DC power supply, and then connect the battery to the battery connector (AC power input: CN10, DC power input: CN4).
2. Turn on the driver main power and DC power supply.
3. Set the "absolute back-up system" parameter to "enable."
4. Turn off the driver main power and DC power supply, and then turn on again.
5. Since the "absolute position error alarm" generates at this time, reset the alarm using either of the following methods.
   – Turn the P-CLR input from ON to OFF. (The alarm will be reset at the OFF edge of the P-CLR input.)
   – Perform the reset of the absolute position error alarm using the **MEXE02**, **OPX-2A** or via RS-485 communication.
6. Perform the return-to-home operation or P-PRESET.

memo

- Do not turn off the driver power supply before the return-to-home operation or P-PRESET is completed. The "absolute position error alarm" may generate when turning on the power supply next time.
- Even when the absolute-position backup system is used, the absolute position may be lost if the motor cable is disconnected. If this occurs, turn off the main power and DC power supply, disconnect the battery, and then set up again following above steps.

■ Specification of the absolute-position backup system

Data retention period	15 days [At an ambient temperature of 20 °C (68 °F), fully charged, motor standstill]
Charging time	32 hours [At an ambient temperature of 20 °C (68 °F)]
Operation range of multi-rotation	–167,772 to +167,772 revolutions

3 Operation type and function list

Operation

[Setting by operation data and parameters]

Positioning operation

Operation function

• Single-motion operation

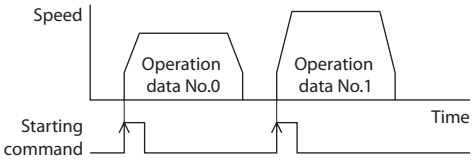

• Linked-motion operation

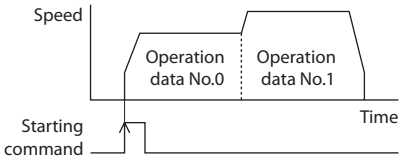

• Linked-motion 2 operation

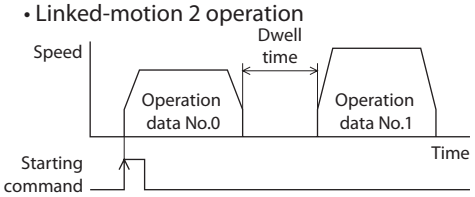

• Push operation

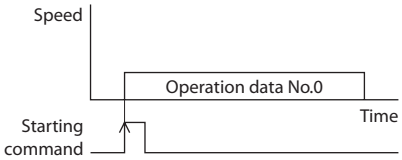

+

Starting method

- Data number selecting operation
- Direct positioning operation
- Sequential positioning operation

Return-to-home operation

• 3-sensor mode

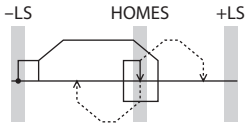

• 2-sensor mode

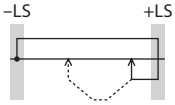

• Push mode

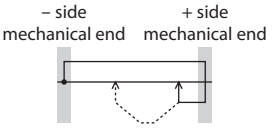

• Position preset

Continuous operation

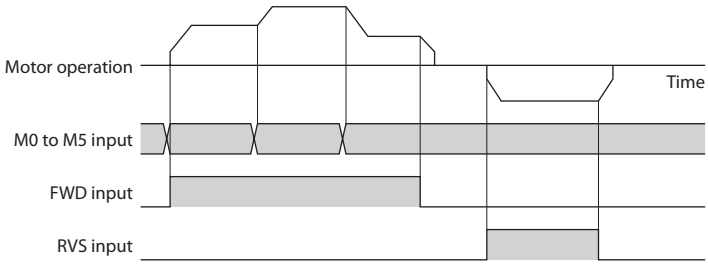

Other operations

- JOG operation
- Automatic return operation

Function

[Setting by parameters]

- **I/O**
  - Input logic level
  - STOP input action
  - Overtravel
- **I/O function**
  - Input function
  - Input logic
  - Output function
- **Motor function**
  - Operating current
  - Standstill current
  - Speed filter
  - Moving average filter
- **I/O function (RS-485)**
  - Input function
  - Output function
- **Operation function**
  - Acceleration/deceleration type
  - Acceleration/deceleration unit
  - JOG operation
  - Automatic return operation
- **Alarm/warning**
  - Alarm detection
  - Warning detection
- **Return-to-home function**
  - Home position offset
  - External sensor signal detection
  - Return-to-home speed
  - Return-to-home starting direction
- **Coordination setting**
  - Resolution (electronic gear)
  - Wrap function
  - Motor rotation direction

4 Positioning operation

Positioning operation is one in which motor operating speed, position (travel amount) and other items are set as operation data and then executed. When the positioning operation is executed, the motor begins at the starting speed and accelerates until the operating speed is reached. Then, once the operating speed is reached, that speed is maintained. The motor decelerates when the stopping position approaches, and finally comes to a stop.
The operation function can also be set in operation data. The operation function is how to operate consecutive operation data (example: operation data No.0, No.1, No.2).

4-1 Operation data

The following data are the operation data for positioning operation. Up to 64 operation data can be set (data Nos.0 to 63).

MEXE02 tree view	Setting item	Description	Initial value
Operation data	Position	Sets the position (distance) for positioning operation. **[Setting range]** –8,388,608 to +8,388,607 step	0
	Operating speed	Sets the operating speed in positioning operation. **[Setting range]** 0 to 1,000,000 Hz	1000
	Acceleration	Sets the acceleration rate (acceleration time) in positioning operation. **[Setting range]** 1 to 1,000,000 (1=0.001 ms/kHz or 1=0.001 s)	1000
	Deceleration	Sets the deceleration rate (deceleration time) in positioning operation. **[Setting range]** 1 to 1,000,000 (1=0.001 ms/kHz or 1=0.001 s)	1000
	Operation mode	Selects how to specify the position (travel amount) in positioning operation. **[Setting range]** 0: Incremental (INC) 1: Absolute (ABS)	0
	Operation function	Sets the operation mode to execute positioning operation. **[Setting range]** 0: Single-motion 1: Linked-motion 2: Linked-motion 2 3: Push	0
	Dwell time	Sets the dwell time to be used in linked-motion 2 operation. **[Setting range]** 0 to 50000 (1=0.001 s)	0
	Push current	Sets the current rate of push-motion operation. **[Setting range]** 0 to 1000 (1=0.1%) *	200
	Sequential positioning	Sets whether to enable or disable sequential positioning operation. **[Setting range]** 0: Disable 1: Enable	0

* For the driver which is before the specification change, the setting range is 0 to 500 (1=0.1%). Refer to p.7 for details.

- **Position, operating speed, acceleration, deceleration**

The acceleration/deceleration for positioning operation can be set as follows using the "acceleration/deceleration type" parameter:
Separate: The acceleration/deceleration set under the applicable operation data No. will be followed (Each 64 data for acceleration and deceleration).
Common: The setting of the "common acceleration" and "common deceleration" parameter will be followed (Each 1 data for acceleration and deceleration).

When the starting speed < operating speed

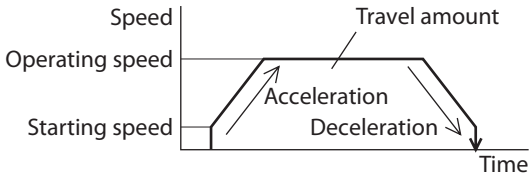

When the starting speed ≥ operating speed

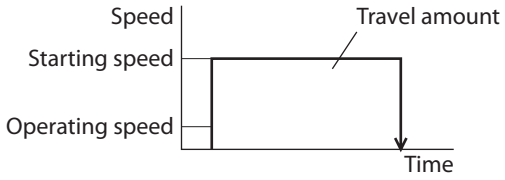

- **Operation mode**

The following two operation modes are available:

Absolute (ABS) mode

The position (distance) from home is set [Absolute positioning].

Example: When positioning operation is performed with setting the starting point to 1000 and setting the destination to +3000 and −3000

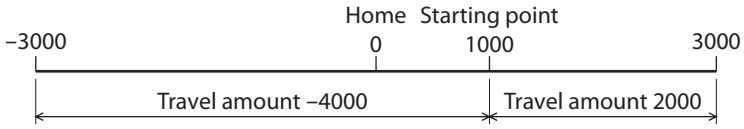

Incremental (INC) mode

Each motor destination becomes the starting point for the next movement. This mode is suitable when the same position (distance) is repeatedly used [Incremental positioning].

Example: When positioning operation is performed with setting the starting point to 1000 and setting the destination to +3000 and −3000

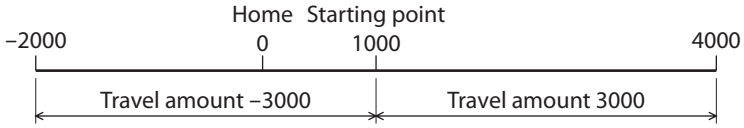

- **Operation function, dwell time**

The following four operation function are available:

Operation function	Description	Ref.
Single-motion	A single operation data set is executed.	p.175
Linked-motion	Multiple sets of operation data are linked to perform multi-variable speed operation	p.176
Linked-motion 2	Dwell time (stop waiting time) can be set between operation data. Operation data whose rotation direction is different can also be linked.	p.177
Push-motion	This is an operation of continuously applying pressure on the load when pressing against the load during positioning operation.	p.179

4-2 Starting method of positioning operation

The following three types are available in the starting method.

Starting method	Description
Data number selecting operation	When the START input is turned ON with selecting the operation data No. by a combination of the M0 to M5 inputs, the positioning operation will perform.
Direct positioning operation	When any of the MS0 to MS5 inputs is turned ON, the positioning operation corresponding to the input data No. will perform.
Sequential positioning operation	Positioning operation is performed to the next operation data No. every time a SSTART input signal is input.

■ Data number selecting operation

Select an operation data based on a combination of ON/OFF status of the M0 to M5 inputs. Refer p.95 for details.

Operation data No.	M5	M4	M3	M2	M1	M0
0	OFF	OFF	OFF	OFF	OFF	OFF
1	OFF	OFF	OFF	OFF	OFF	**ON**
2	OFF	OFF	OFF	OFF	**ON**	OFF
. . .	. . .	. . .	. . .	. . .	. . .	. . .
61	**ON**	**ON**	**ON**	**ON**	OFF	**ON**
62	**ON**	**ON**	**ON**	**ON**	**ON**	OFF
63	**ON**	**ON**	**ON**	**ON**	**ON**	**ON**

Operating method

1) Check the READY output is ON.
2) Select the operation data No. by a combination of the M0 to M5 inputs and turn the START input ON.
3) The motor starts positioning operation.
4) Check that the READY output has been turned OFF and turn the START input OFF.
5) When the positioning operation is completed, the READY output will be turned ON.

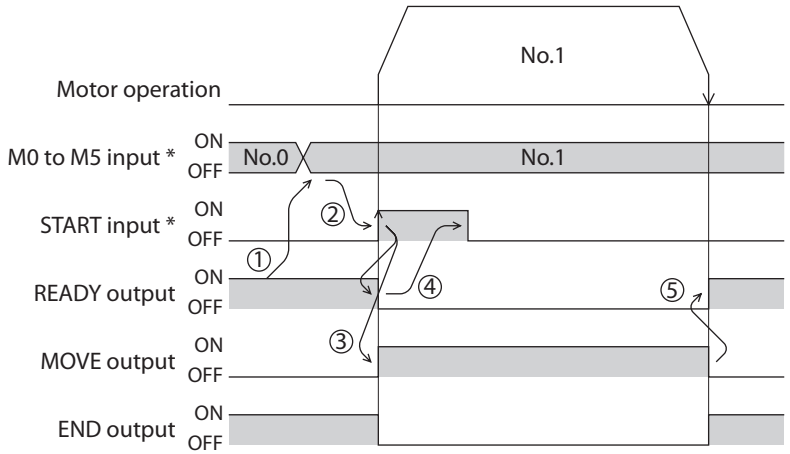

* In direct I/O, turn the START input ON after setting the M0 to M5 inputs. In remote I/O, the operation will be performed even when turning the M0 to M5 inputs and the START input ON simultaneously.

■ Direct positioning operation

When any of the MS0 to MS5 inputs is turned ON, the positioning operation corresponding to the input data No. will perform. Since the positioning operation is enabled by turning any of the MS0 to MS5 inputs ON, you can save the step of selecting the operation data No.
The operation data assigning to the MS0 to MS5 inputs will be set by parameters.

Related parameter

MEXE02 tree view	Parameter name	Description	Initial value
I/O	MS0 operation No. selection	Sets the operation data No. corresponding to MS0 to MS5 input. **[Setting range]** 0 to 63	0
	MS1 operation No. selection		1
	MS2 operation No. selection		2
	MS3 operation No. selection		3
	MS4 operation No. selection		4
	MS5 operation No. selection		5

Operating method

1) Check the READY output is ON.
2) Turn the MS0 input ON.
3) The motor starts positioning operation.
4) Check that the READY output has been turned OFF and turn the MS0 input OFF.
5) When the positioning operation is completed, the READY output will be turned ON.

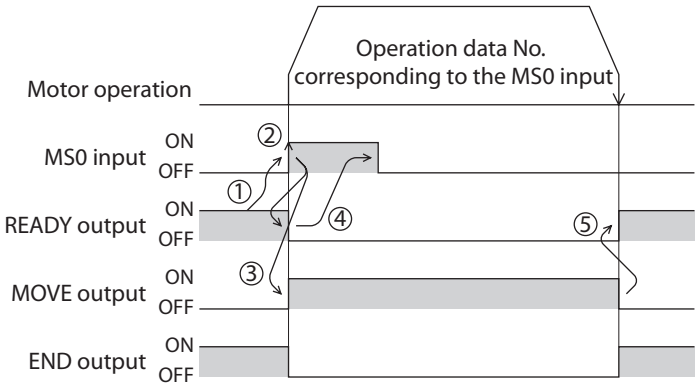

■ Sequential positioning operation

In sequential positioning operation, whenever turning the SSTART input ON, the positioning operation for the following operation data No. will be performed. This function is useful when multiple positioning operations must be performed sequentially, because there is no need to select each data number.
When the "sequential positioning" of operation data is executed up to the data No. set to "disable", the operation returns to the original data No. that was selected before starting the sequential positioning operation. And the sequential positioning operation will start again.
If the starting point for the sequential positioning operation is changed using the M0 to M5 inputs or the MS0 to MS5 inputs, multiple sequential positioning operations can be set. It is convenient for setting a different operating pattern for each component or each process of works.

- **When the operating pattern is one type**

1) The positioning operation for the operation data No.0 is performed by turning the SSTART input ON.
2) After the operation 1) is completed, when turning the SSTART input ON again, the positioning operation for the operation data No.1 will be performed.
3) After the operation 2) is completed, when turning the SSTART input ON again, the positioning operation for the operation data No.2 will be performed.
4) After the operation 3) is completed, when turning the SSTART input ON again, the positioning operation will be performed by returning to the operation data No.0 because the sequential positioning for the operation data No.3 has been set to "disable."

Setting example

Operation data	Sequential positioning
No.0	Enable
No.1	
No.2	
No.3	Disable

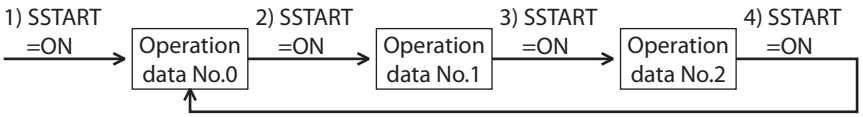

- **When the operating patterns are multiple**

1) After selecting the operation data No.3 that is the starting point for the sequential positioning operation, the positioning operation will be performed by turning the START input ON.
2) After the operation 1) is completed, when turning the SSTART input ON again, the positioning operation for the operation data No.4 will be performed.
3) After the operation 2) is completed, when turning the SSTART input ON again, the positioning operation for the operation data No.5 will be performed.
4) After the operation 3) is completed, when turning the SSTART input ON again, the positioning operation will be performed by returning to the operation data No.3 because the sequential positioning for the operation data No.6 has been set to "disable."
5) After the operation 4) is completed, the positioning operation is performed by selecting the operation No.7 and turning the START input ON.
6) The operation data No.7 becomes a starting point for a new sequential positioning operation.
7) After the operation 5) is completed, when turning the SSTART input ON again, the positioning operation for the operation data No.8 will be performed.
8) When turning the SSTART input ON again after the operation 6) is completed, the positioning operation will be performed by returning to the operation data No.7 because the sequential positioning for the operation data No.9 has been set to "disable."

Setting example

Operation data	Sequential positioning
No.3	Enable
No.4	
No.5	
No.6	Disable
No.7	Enable
No.8	
No.9	Disable

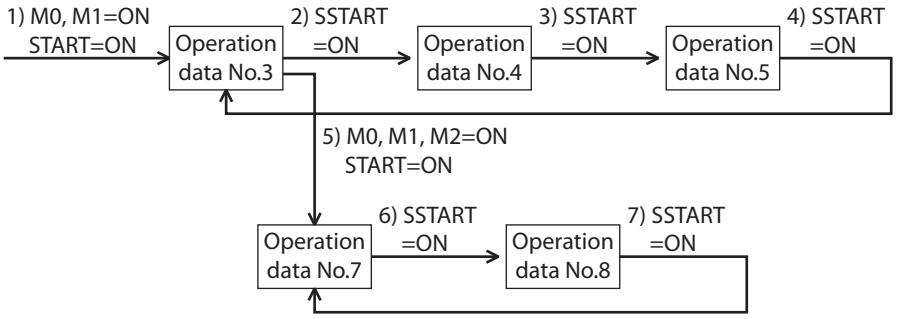

- **Operating method**

  1) Check the READY output is ON.
  2) Turn the SSTART input ON.
  3) The motor starts positioning operation.
  4) Check that the READY output has been turned OFF and turn the SSTART input OFF.
  5) When the positioning operation is completed, the READY output will be turned ON.

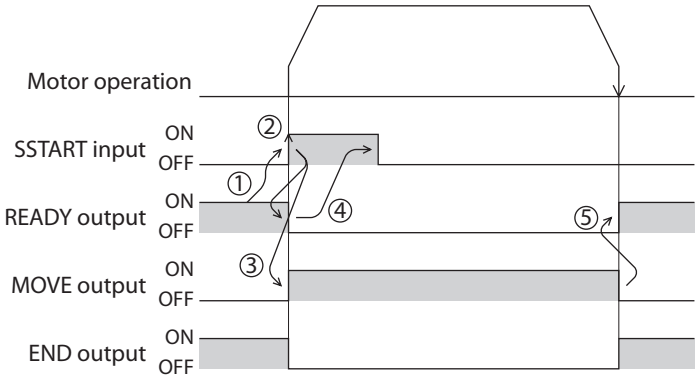

- **Key points about sequential positioning operation**

  When performing any of the following operations while sequential positioning operation is performed, the starting point for sequential positioning will be changed to the operation data No.0. And the current operation data No. is set to "–1".

  - When the DC power supply is turned ON.
  - When operations other than the positioning operation are performed (return-to home operation, continuous operation, etc.).
  - When an alarm is generated and reset.
  - When the STOP input is turned ON.
  - When the command turning the motor excitation OFF is input. (When the FREE input is turned ON or the C-ON input is turned OFF.)
  - When the P-PRESET is executed.
  - When a configuration is executed.

memo Set "enable" the "sequential positioning" even when sequential positioning is performed by the operation data being set to "Linked-motion" or "Linked-motion 2" in the "operation function."

4-3 Operation function

■ Single-motion operation

The positioning operation is performed only once using a single operation data set.

● Example of single-motion operation

	Operation mode	Position [step]	Operating speed [Hz]	Operation function	Push current [%]	Dwell time [s]	Sequential positioning	Acceleration [ms/kHz] or [s]	Deceleration [ms/kHz] or [s]
#0	Incremental (INC)	0	1000	Single-motion	20.0	0.000	Disable	1.000	1.000
#1	Incremental (INC)	5000	5000	Single-motion	20.0	0.000	Disable	1000.000	1000.000

Operation example

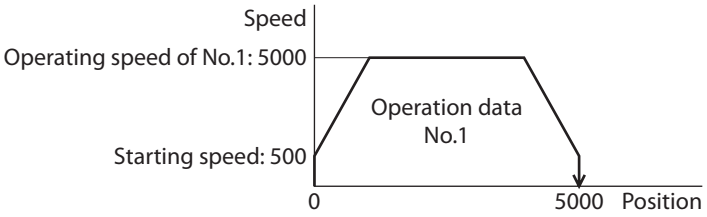

Operating method

1) Check the READY output is ON.
2) Select the operation data No.1 by turning the M0 input ON and turn the START input ON.
3) The motor starts the positioning operation for the operation data No.1.
4) Check that the READY output has been turned OFF and turn the START input OFF.
5) When the positioning operation is completed, the READY output will be turned ON.

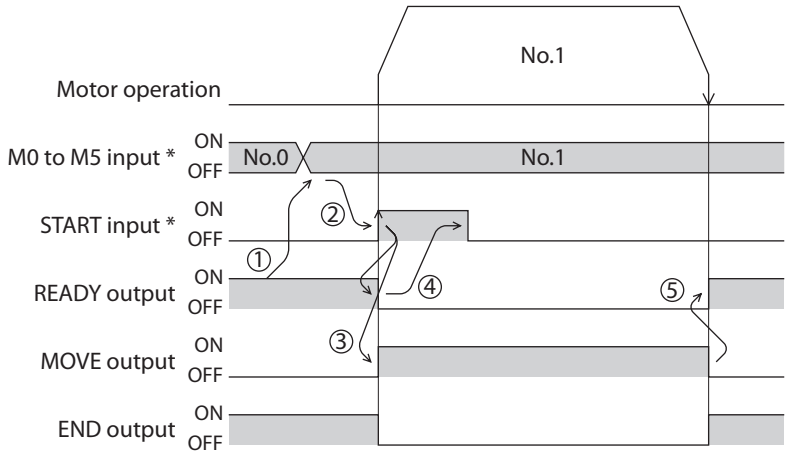

* In direct I/O, turn the START input ON after setting the M0 to M5 inputs. In remote I/O, the operation will be performed even when turning the M0 to M5 inputs and the START input ON simultaneously.

■ Linked-motion operation

When the "operation function" is set to "linked-motion" using operation data, positioning operation based on the next data number will be performed without stopping the motor.
If operation data includes data for which "single-motion" or "push" is set, the motor will stop after the positioning with respect to the "single" or "push" operation data is completed.
A maximum of 4 operation data can be linked. Note that only operation data of the same direction can be linked.

memo

- Multiple operation data of different directions cannot be linked. An operation data error alarm will generate during operation.
- Up to four sets of operation data can be linked. When combining the linked-motion operation and the linked-motion 2 operation, make sure the total number of linked operation data sets does not exceed four. When linked-motion operation is performed with five or more sets of operation data linked together, an operation data error alarm will generate upon start of operation.
- No.0 will not be linked even when "linked-motion" is set for data No.63, because the operation pertaining to No.63 will be processed independently.
- The acceleration/deceleration in linked-motion operation corresponds to the acceleration/deceleration specified for the operation data No. with which the linked-motion operation is started.
- When the operation data linked last is being set to "push," the push speed is applied as the starting speed.

● Example of linked-motion operation

	Operation mode	Position [step]	Operating speed [Hz]	Operation function	Push current [%]	Dwell time [s]	Sequential positioning	Acceleration [ms/kHz] or [s]	Deceleration [ms/kHz] or [s]
#0	Incremental (INC)	0	1000	Single-motion	20.0	0.000	Disable	1.000	1.000
#1	Incremental (INC)	5000	5000	Linked-motion	20.0	0.000	Disable	1000.000	1000.000
#2	Incremental (INC)	20000	10000	Single-motion	20.0	0.000	Disable	1.000	1.000

Operation example

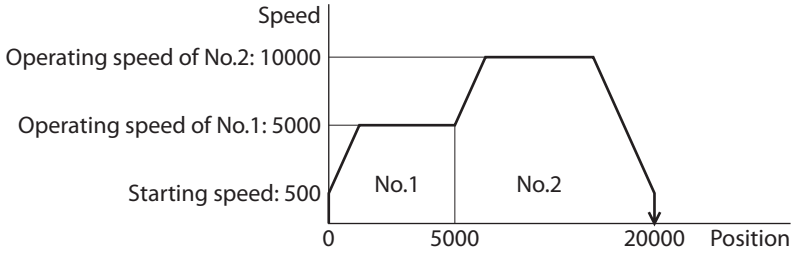

Operating method

1) Check the READY output is ON.
2) Select the operation data No.1 by turning the M0 input ON and turn the START input ON.
3) The motor starts the positioning operation in which the operation data No.1 and No.2 are linked.
4) Check that the READY output has been turned OFF and turn the START input OFF.
5) When the positioning operation is completed, the READY output will be turned ON.

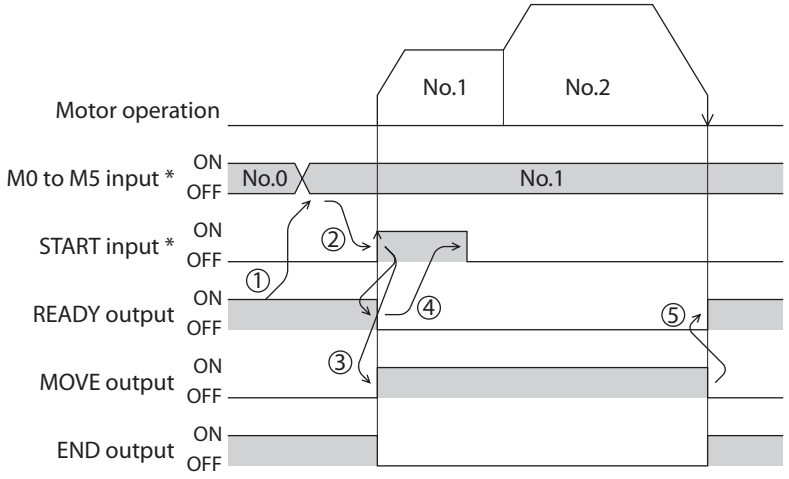

* In direct I/O, turn the START input ON after setting the M0 to M5 inputs. In remote I/O, the operation will be performed even when turning the M0 to M5 inputs and the START input ON simultaneously.

■ Linked-motion 2 operation

By setting the "operation function" of operation data to "Linked-motion2," an operation data whose rotation direction is different can be linked. In this case, the system stops for the dwell time after each positioning operation, and then performs operation according to the next operation data. If operation data includes data for which "single-motion" or "push" is set, the motor will stop after the positioning with respect to the "single" or "push" operation data is completed.

memo

- Up to four sets of operation data can be linked. When combining the linked-motion operation and the linked-motion 2 operation, make sure the total number of linked operation data sets does not exceed four. When linked-motion operation is performed with five or more sets of operation data linked together, an operation data error alarm will generate upon start of operation.
- No.0 will not be linked even when "linked-motion2" is set for data No.63, because the operation pertaining to No.63 will be processed independently.

● Example of linked-motion 2 operation

	Operation mode	Position [step]	Operating speed [Hz]	Operation function	Push current [%]	Dwell time [s]	Sequential positioning	Acceleration [ms/kHz] or [s]	Deceleration [ms/kHz] or [s]
#0	Incremental (INC)	0	1000	Single-motion	20.0	0.000	Disable	1.000	1.000
#1	Incremental (INC)	5000	5000	Linked-motion 2	20.0	1.000	Disable	1000.000	1000.000
#2	Incremental (INC)	-3000	3000	Single-motion	20.0	0.000	Disable	1000.000	1000.000

Operation example

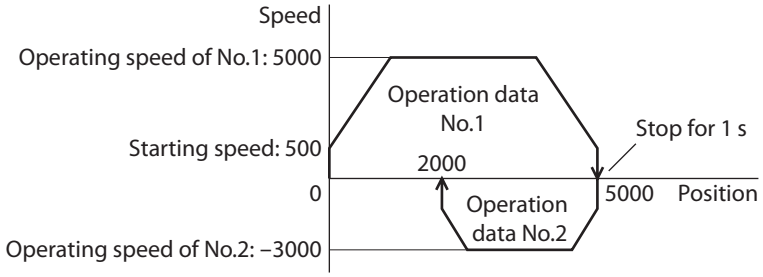

Operating method

1) Check the READY output is ON.
2) Select the operation data No.1 by turning the M0 input ON and turn the START input ON.
3) The motor starts the positioning operation for the operation data No.1.
4) Check that the READY output has been turned OFF and turn the START input OFF.
5) When the positioning operation 3) is completed, the MOVE output will be turned OFF.
6) When the dwell time has passed, the positioning operation for the operation data No.2 will automatically start. At the same time, the MOVE output will be turned ON.
7) When the positioning operation for the operation data No.2 is completed, the READY output will be turned ON.

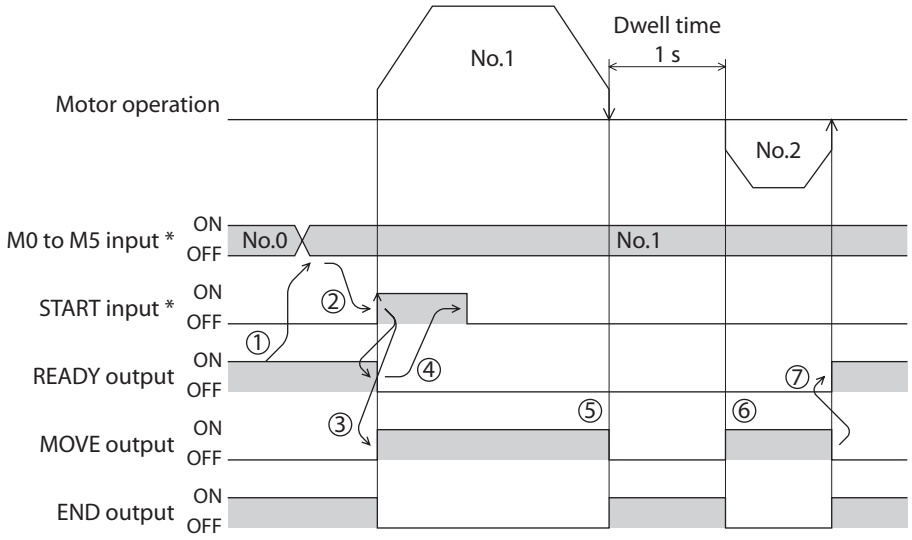

* In direct I/O, turn the START input ON after setting the M0 to M5 inputs. In remote I/O, the operation will be performed even when turning the M0 to M5 inputs and the START input ON simultaneously.

- **Example of linked-motion 2 operation;**
  When combining the linked-motion operation and the linked-motion 2 operation

	Operation mode	Position [step]	Operating speed [Hz]	Operation function	Push current [%]	Dwell time [s]	Sequential positioning	Acceleration [ms/kHz] or [s]	Deceleration [ms/kHz] or [s]
#0	Incremental (INC)	0	1000	Single-motion	20.0	0.000	Disable	1.000	1.000
#1	Incremental (INC)	5000	3000	Linked-motion	20.0	0.000	Disable	1000.000	1000.000
#2	Incremental (INC)	10000	5000	Linked-motion	20.0	0.000	Disable	1.000	1.000
#3	Incremental (INC)	25000	7000	Linked-motion 2	20.0	1.000	Disable	1.000	1.000
#4	Absolute (ABS)	0	7000	Single-motion	20.0	0.000	Disable	1000.000	1000.000

Operation example

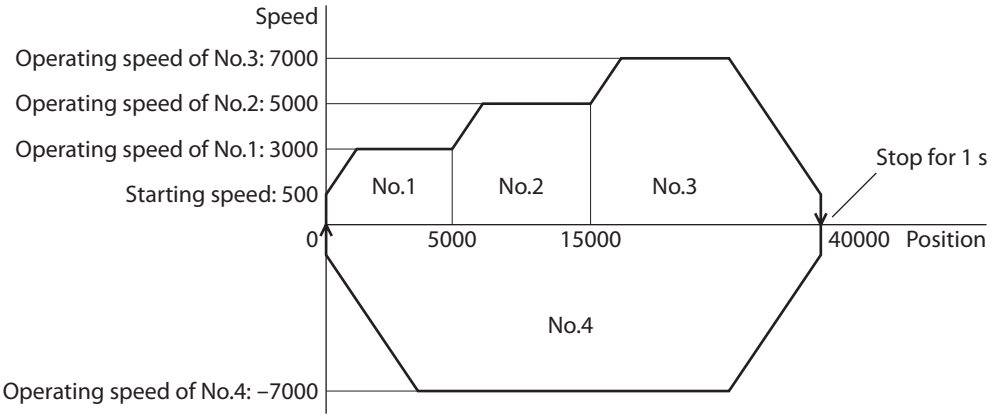

Operating method

1) Check the READY output is ON.
2) Select the operation data No.1 by turning the M0 input ON and turn the START input ON.
3) The motor starts the positioning operation in which the operation data from No.1 to No.3 are linked.
4) Check that the READY output has been turned OFF and turn the START input OFF.
5) When the positioning operation 3) is completed, the MOVE output will be turned OFF.
6) When the dwell time has passed, the positioning operation for the operation data No.4 will automatically start. At the same time, the MOVE output will be turned ON.
7) When the positioning operation for the operation data No.4 is completed, the READY output will be turned ON.

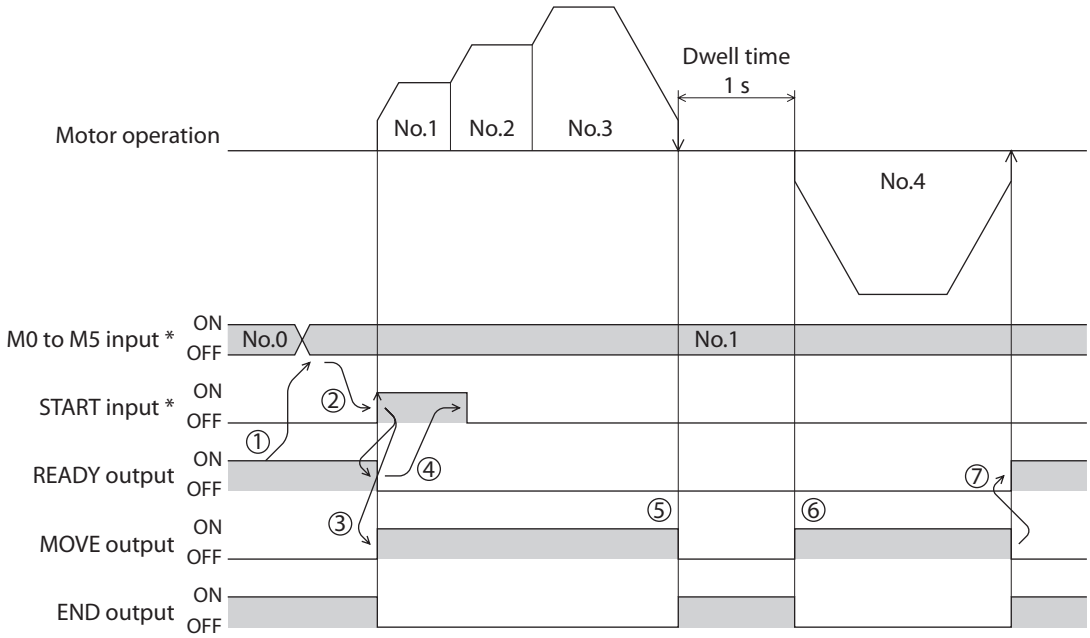

* In direct I/O, turn the START input ON after setting the M0 to M5 inputs. In remote I/O, the operation will be performed even when turning the M0 to M5 inputs and the START input ON simultaneously.

4-4 Push-motion operation

When the "operation function" is set to "push," the motor performs an operation of continuously applying pressure on the load when pressing against the load. In push-motion operation, the motor performs constant speed operation at the operating speed of the selected operation data No. but the acceleration/deceleration will not be applied.
The motor becomes push-motion status when pressing against the load, and the TLC output and READY output are turned ON. The set current value of push-motion operation is applied to the motor current.
When the operation was completed with non-push-motion status, the motor stops, and the END output and READY output are turned ON. The set current of push-motion operation is applied to the motor current at standstill.
When the STOP input is turned ON, the motor stops, and the END output and READY output are turned ON.
The STOP current is applied to the motor current at standstill.

Note Do not perform push-motion operation with geared types. Doing so may cause damage to the motor or gear part.

memo
- Regardless of resolution, the maximum speed of push-motion operation is 500 r/min. If the push-motion operation is started by setting higher speed than 500 r/min, an operation data error alarm will generate. For the driver which is before the specification change, the maximum speed of push-motion operation is 30 r/min. Refer to p.7 for details.
- If push-motion operation is performed for a long time while a large push-motion current is set, the driver may increase the temperature rise and generate the main circuit overheat alarm.

- **Example of push-motion operation; When it had pressed against the load**

	Operation mode	Position [step]	Operating speed [Hz]	Operation function	Push current [%]	Dwell time [s]	Sequential positioning	Acceleration [ms/kHz] or [s]	Deceleration [ms/kHz] or [s]
#0	Incremental (INC)	0	1000	Single-motion	20.0	0.000	Disable	1.000	1.000
#1	Incremental (INC)	5000	500	Push	50.0	0.000	Disable	1.000	1.000

Operation example

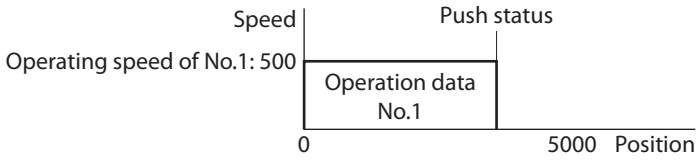

Operating method

1) Check the READY output is ON.
2) Select the operation data No.1 by turning the M0 input ON and turn the START input ON.
3) The motor starts the positioning operation for the operation data No.1.
4) Check that the READY output has been turned OFF and turn the START input OFF.
5) When the motor becomes push-motion status, the TLC output will be turned ON and then the READY output will be turned ON.

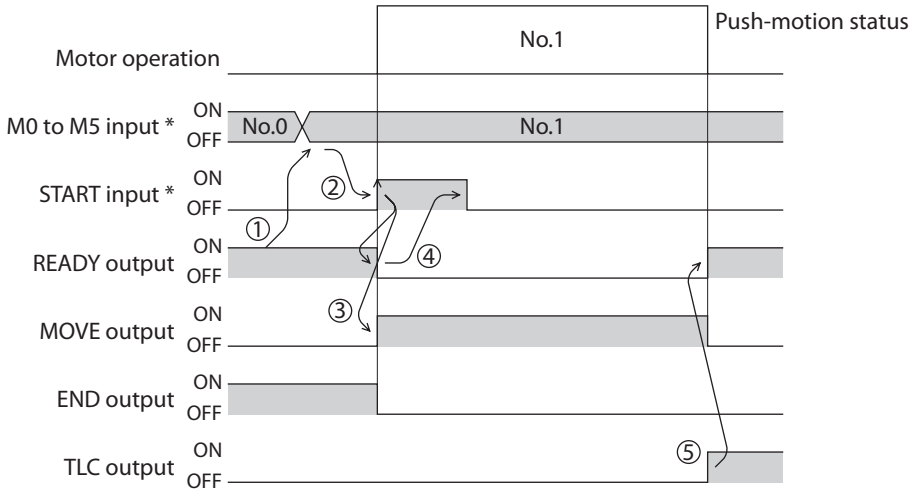

* In direct I/O, turn the START input ON after setting the M0 to M5 inputs. In remote I/O, the operation will be performed even when turning the M0 to M5 inputs and the START input ON simultaneously.

- **Example of push-motion operation; When it had not pressed against the load**

Operation example

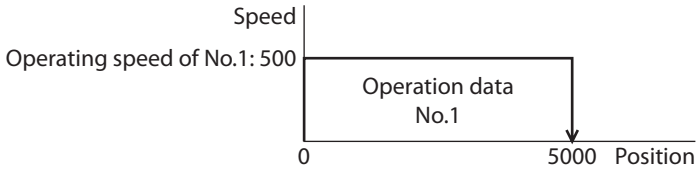

Operating method

1) Check the READY output is ON.
2) Select the operation data No.1 by turning the M0 input ON and turn the START input ON.
3) The motor starts the positioning operation for the operation data No.1.
4) Check that the READY output has been turned OFF and turn the START input OFF.
5) When the motor reaches to the target position, the operation will be stopped and the READY output will be turned ON. Since the motor did not become push-motion status, the TLC output remains OFF.

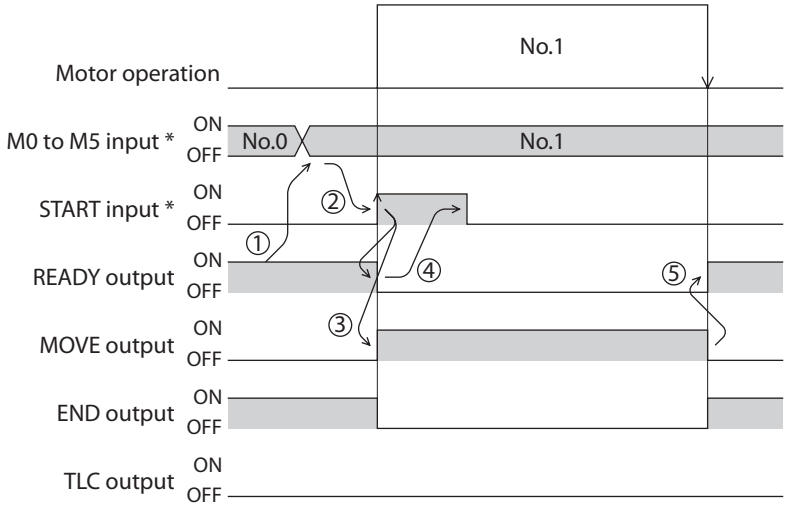

* In direct I/O, turn the START input ON after setting the M0 to M5 inputs. In remote I/O, the operation will be performed even when turning the M0 to M5 inputs and the START input ON simultaneously.

- **Example of push-motion operation; When combining the linked-motion operation and the push-motion operation**

	Operation mode	Position [step]	Operating speed [Hz]	Operation function	Push current [%]	Dwell time [s]	Sequential positioning	Acceleration [ms/kHz] or [s]	Deceleration [ms/kHz] or [s]
#0	Incremental (INC)	0	1000	Single-motion	20.0	0.000	Disable	1.000	1.000
#1	Incremental (INC)	5000	5000	Linked-motion	20.0	0.000	Disable	1000.000	1000.000
#2	Incremental (INC)	5000	500	Push	50.0	0.000	Disable	1.000	1.000

Operation example

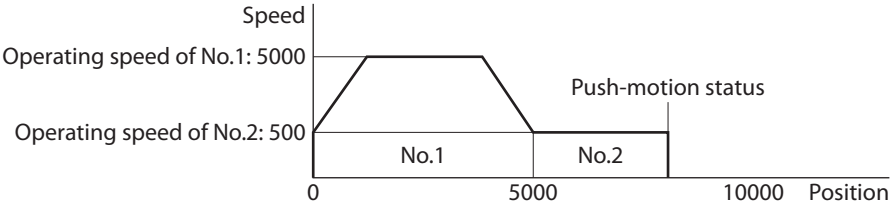

Operating method

1) Check the READY output is ON.
2) Select the operation data No.1 by turning the M0 input ON and turn the START input ON.
3) The motor starts the positioning operation in which the operation data No.1 and No.2 are linked.
4) Check that the READY output has been turned OFF and turn the START input OFF.
5) When the motor becomes push-motion status, the TLC output will be turned ON and then the READY output will be turned ON.

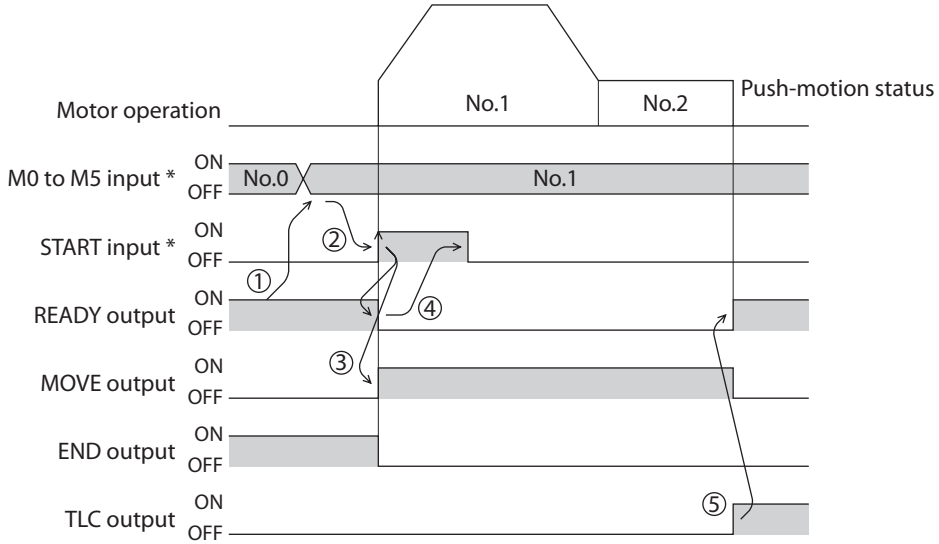

* In direct I/O, turn the START input ON after setting the M0 to M5 inputs. In remote I/O, the operation will be performed even when turning the M0 to M5 inputs and the START input ON simultaneously.

5 Return-to-home operation

Return-to-home is an operation in which the reference point of positioning (mechanical home position) is detected automatically. Return-to-home operation is performed to return to the home position from the current position when the power supply is turned on or the positioning operation is completed.
Return-to-home operation can be performed in the following four modes:

Operation type	Description	Feature
3-sensor mode	The motor operates at the "operating speed of home-seeking." When the HOME sensor is detected, the motor will stop and the stop position will be the home position.	• 3 external sensors are needed. *3 • Operating speed is high (Operating speed of home-seeking).
2-sensor mode	The motor operates at the "starting speed of home-seeking." When the limit sensor is detected, the motor will rotate in the reverse direction and escape from the limit sensor. After escaping from the limit sensor, the motor will move 200 steps and stop, and then the stop position will be the home position. *2	• 2 external sensors are needed. • Operating speed is low (Starting speed of home-seeking).
Push mode *1	The motor operates at the "starting speed of home-seeking." When the moving part for the motor is pressed against a mechanical stopper etc., the motor will rotates in the reverse direction. After reversing, the motor will move 200 steps and stop, and then the stop position will be the home position. *2	• No external sensor is needed. • Operating speed is low (Starting speed of home-seeking).
Position preset	When executing the P-PRESET at the position that the motor stops, the command position will be the value of the "preset position" parameter. The home position can be set to any position.	• No external sensor is needed. • The home position can be set to any position.

*1 Do not perform push-mode return-to-home operation for geared motors.
*2 It moves 200 steps regardless of resolution. Therefore, the actual travel distance may vary according to resolution.
*3 In the case of a rotating mechanism, even when using one external sensor, the home position can be detected. Set to the 3-sensor mode, and connect the HOME sensor only.

■ Additional function

Additional function	2-sensor mode 3-sensor mode Push mode	Position preset	Related parameter
Home offset	Possible	Not possible	• Position offset of home-seeking
External sensor (signal) detection	Possible	Not possible	• SLIT detection with home-seeking • TIM signal detection with home-seeking
Command position after returning to home	The position becomes "0"	Any position	• Preset position

● Home offset

This is a function to perform positioning operation of the offset amount set by the parameter after return-to-home operation and to set the stop position to the home position. The position set by the home offset is called "electrical home" in distinction from the usual home position.
If the amount of offset from mechanical home is "0," the mechanical home and electrical home will become the same.

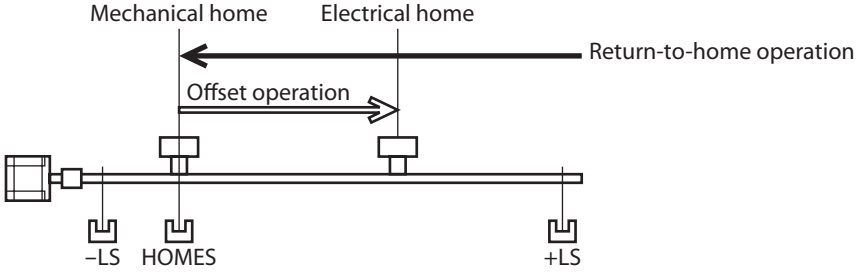

- **Detecting the external sensor (signal)**

  When detecting the home, use of the SLIT input and/or TIM signal will increase the accuracy of home detection.

  memo When the TIM output is used, set the resolution to be an integral multiple of 50.

- **Command position after returning to home**

  When executing the P-PRESET at the position that the motor stops, the command position will be the value of the "preset position" parameter.

■ Parameters related to return-to-home operation

MEXE02 tree view	Parameter name	Description	Initial value
Home operation	Home-seeking mode	Sets the mode for return-to-home operation. **[Setting range]** 0: 2-sensor mode 1: 3-sensor mode 2: Push mode	1
	Operating speed of home-seeking	Sets the operating speed for return-to-home operation. **[Setting range]** 1 to 1,000,000 Hz	1000
	Acceleration/ deceleration of home-seeking	Sets the acceleration/deceleration rate (acceleration/deceleration time) for return-to-home operation. **[Setting range]** 1 to 1,000,000 (1=0.001 ms/kHz or 1=0.001 s)	1000
	Starting speed of home-seeking	Sets the starting speed for return-to-home operation. **[Setting range]** 1 to 1,000,000 Hz	500
	Position offset of home-seeking	Sets the amout of offset from mechanical home. **[Setting range]** –8,388,608 to 8,388,607 step	0
	Starting direction of home-seeking	Sets the starting direction for home detection. **[Setting range]** 0: Negative side 1: Positive side	1
	SLIT detection with home-seeking	Sets whether or not to concurrently use the SLIT input for return-to-home operation. **[Setting range]** 0: Disable 1: Enable	0
	TIM signal detection with home-seeking	Sets whether or not to concurrently use the TIM signal for return-to-home operation. **[Setting range]** 0: Disable 1: Enable	0
	Operating current of home-seeking with push-motion	Sets the operating current for push-motion return-to-home operation based on the rated current being 100%. **[Setting range]** 0 to 1000 (1=0.1%)	1000

- **Operation example (when using 3-sensor mode)**

Operating sequence in seeing a time axis

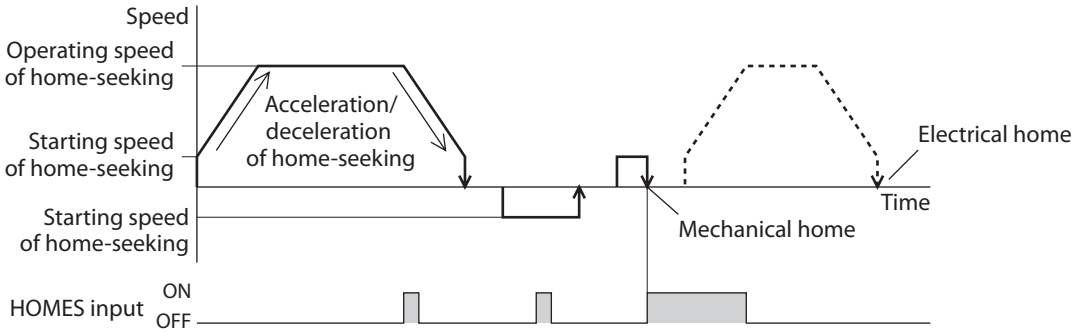

Operating sequence in seeing a travel amount

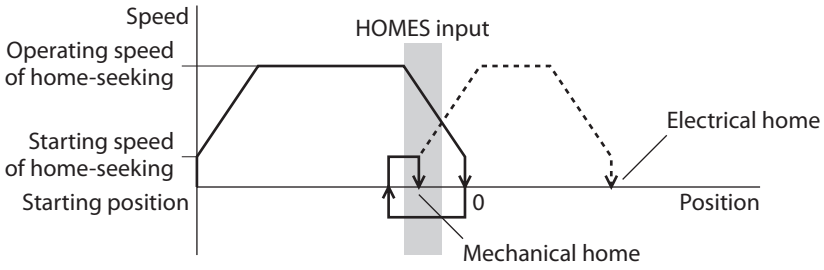

- **Operating method**

1) Check the READY output is ON.
2) Turn the HOME input ON.
3) Return-to-home operation will be started.
4) Check that the READY output has been turned OFF and turn the HOME input OFF.
5) When return-to-home operation is completed, the HOME-P output will be turned ON.

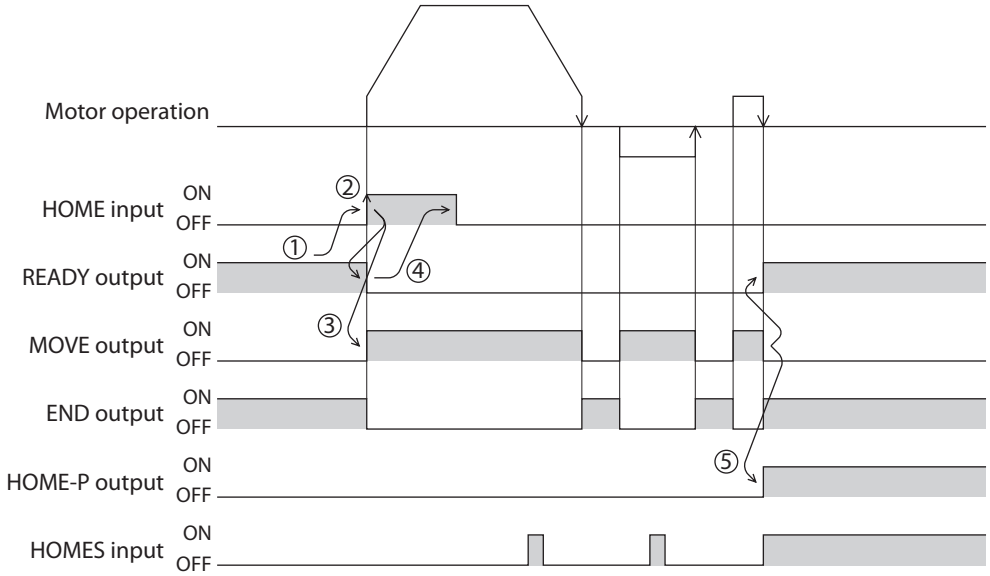

5-1 Operation sequence

■ 3-sensor mode

VS: Starting speed of home-seeking
VR: Operating speed of home-seeking
VL: Last speed of return-to-home (When VS < 500 Hz: VS, When VS ≥ 500 Hz: 500 Hz)
- - - Broken line indicates a home offset move.

Starting position of return-to-home operation	Starting direction of return-to-home operation: Positive side	Starting direction of return-to-home operation: Negative side
–LS	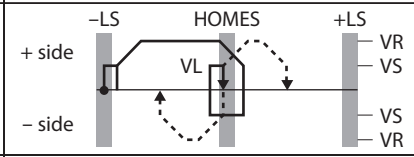	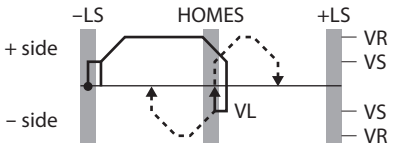
+LS	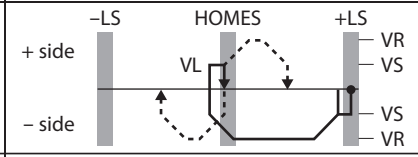	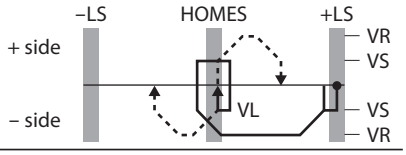
HOMES	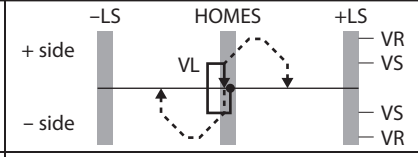	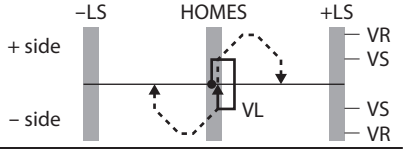
Between HOMES and –LS	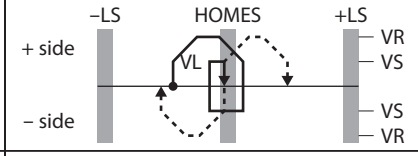	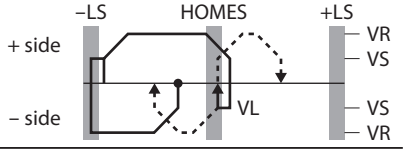
Between HOMES and +LS	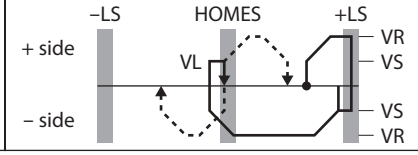	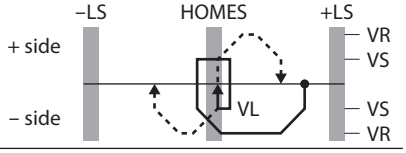

● When using the HOME sensor only

If the limit sensor is not used such as a rotating mechanism, operation sequences are as follows.

Starting position of return-to-home operation	Starting direction of return-to-home operation: Positive side	Starting direction of return-to-home operation: Negative side
HOMES	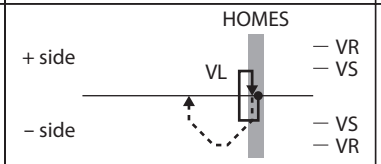	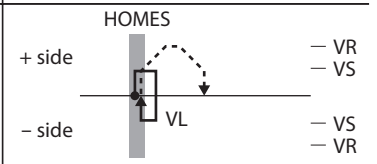
Not HOMES	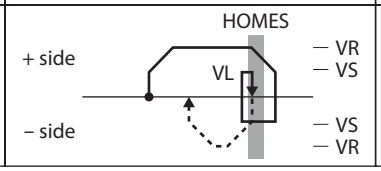	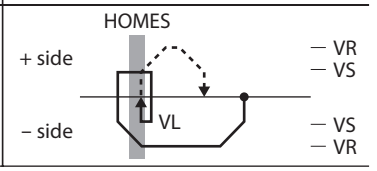

Note Depending on the setting value of the "acceleration/deceleration of home-seeking" parameter, the motor may decelerate to a stop in excess of the HOME sensor after the HOME sensor was detected. Since there is a risk of contact if the distance between the mechanical end and the HOME sensor is close, provide enough distance between them.

● **When concurrently using the SLIT input and/or TIM signal**

After the HOME sensor is detected, the operation will continue until the external sensor (signal) will be detected. If the external sensor (signal) is detected while the HOME sensor is ON, the return-to-home operation will complete.

Signal type	Starting direction of return-to-home operation: Positive side	Starting direction of return-to-home operation: Negative side
SLIT input	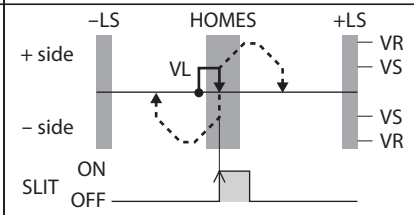	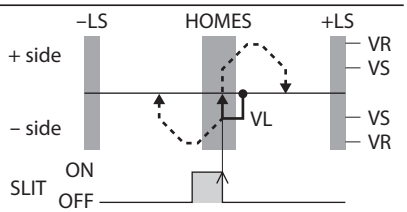
TIM signal	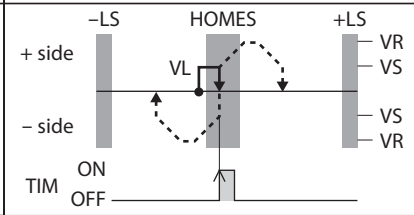	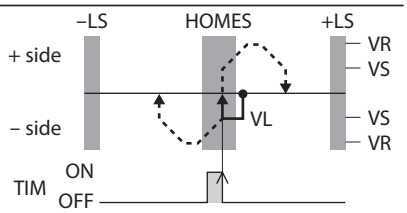
SLIT input and TIM signal	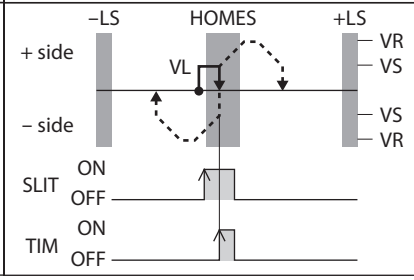	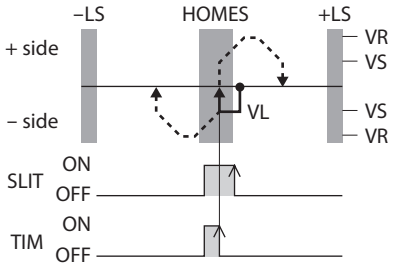

■ 2-sensor mode

VS: Starting speed of home-seeking
VR: Operating speed of home-seeking
VL: Last speed of return-to-home (When VS < 500 Hz: VS, When VS ≥ 500 Hz: 500 Hz)
- - - Broken line indicates a home offset move.

Starting position of return-to-home operation	Starting direction of return-to-home operation: Positive side	Starting direction of return-to-home operation: Negative side
–LS	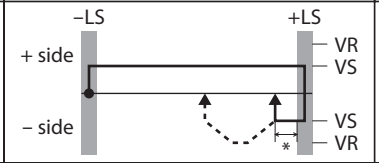	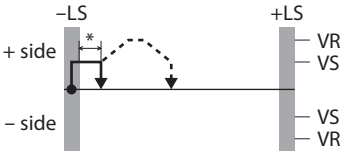
+LS	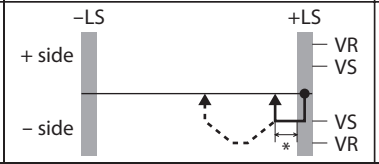	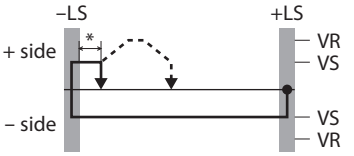
Between –LS and +LS	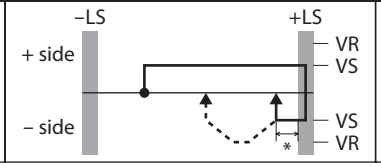	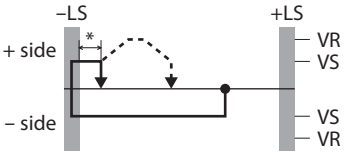

* After pulling out of the limit sensor, the motor will move 200 steps.

- **When concurrently using the SLIT input and/or TIM signal**

  When the limit sensor is detected, the motor will rotate in the reverse direction and escape from the limit sensor. After escaping from the limit sensor, the motor will move 200 steps and stop once. Then, the motor operation will continue until the external sensor (signal) will be detected. When the external sensor (signal) is detected, return-to-home operation will complete.

Signal type	Starting direction of return-to-home operation: Positive side	Starting direction of return-to-home operation: Negative side
SLIT input	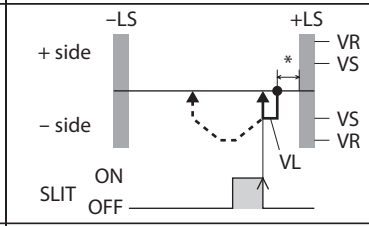	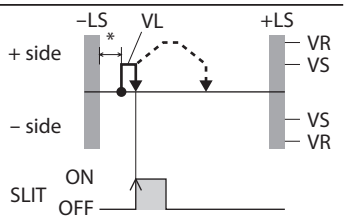
TIM signal	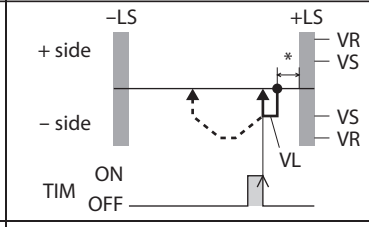	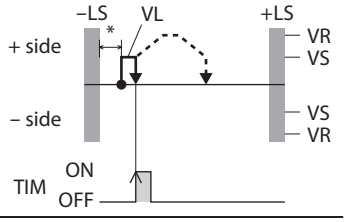
SLIT input and TIM signal	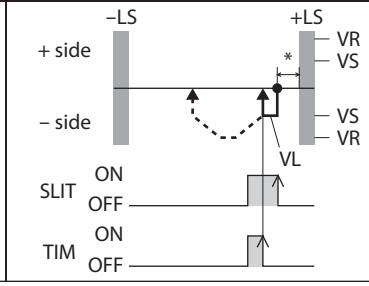	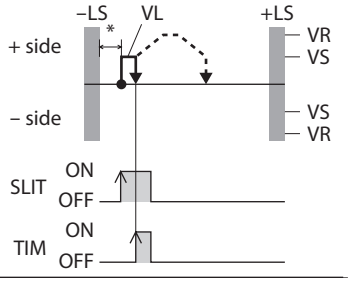

* After pulling out of the limit sensor, the motor will move 200 steps.

■ Push mode

VS: Starting speed of home-seeking
VR: Operating speed of home-seeking
VL: Last speed of return-to-home (When VS < 500 Hz: VS, When VS ≥ 500 Hz: 500 Hz)
- - - Broken line indicates a home offset move.

Starting position of return-to-home operation	Starting direction of return-to-home operation: Positive side	Starting direction of return-to-home operation: Negative side
– side mechanical end	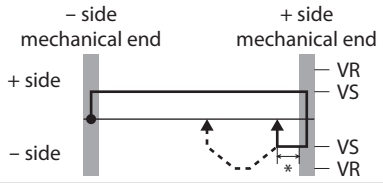	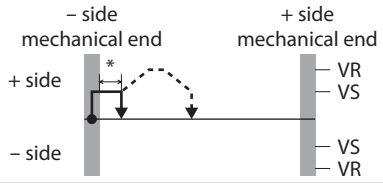
+ side mechanical end	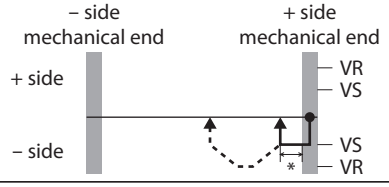	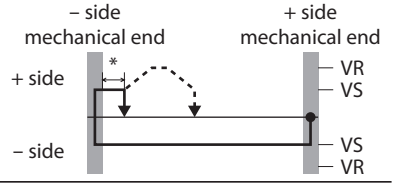
Between mechanical ends	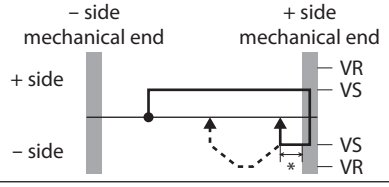	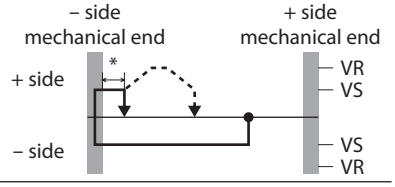

* The motor will move 200 steps from the mechanical end.

- **When concurrently using the SLIT input and/or TIM signal**

  When the moving part for the motor is pressed against a mechanical stopper etc., the motor will rotates in the reverse direction. After reversing, the motor will move 200 steps and stop once. Then, the motor operation will continue until the external sensor (signal) will be detected. When the external sensor (signal) is detected, return-to-home operation will complete.

Signal type	Starting direction of return-to-home operation: Positive side	Starting direction of return-to-home operation: Negative side
SLIT input	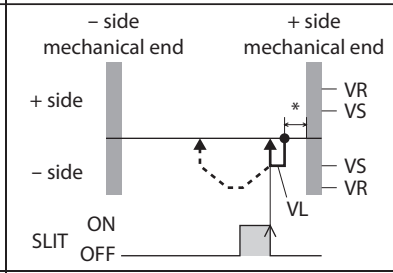	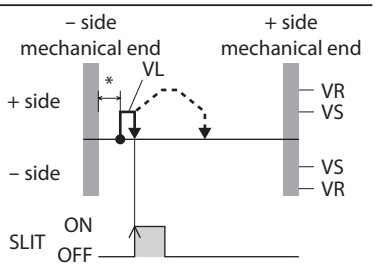
TIM signal	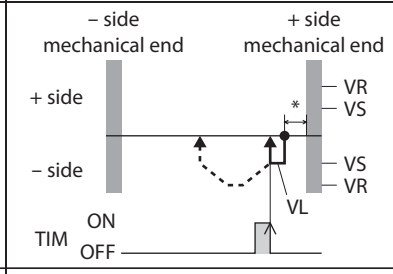	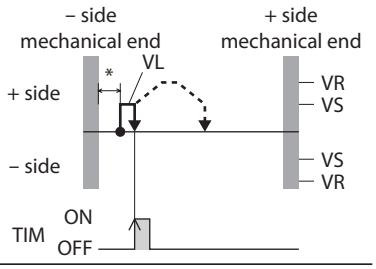
SLIT input and TIM signal	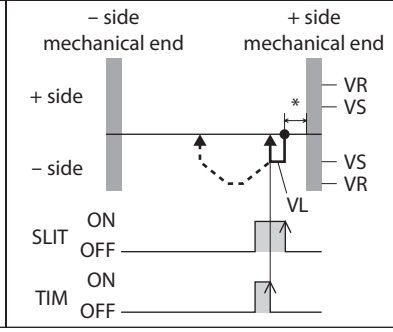	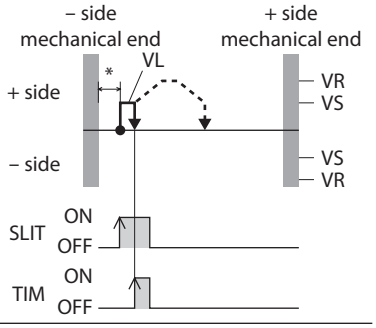

* The motor will move 200 steps from the mechanical end.

Note

- Do not perform push-mode return-to-home operation for geared motor. Doing so may cause damage to the motor.
- The maximum speed for the push-mode is 500 r/min on the motor output shaft regardless of resolution. Starting return-to-home operation with setting faster speed than 500 r/min may cause damage to the motor.

5-2 Position preset

When the P-PRESET is executed, the command position is set as the value of the "preset position" parameter. However, the preset will not execute in the following conditions.

- When the motor is operating
- When an alarm is present

● Related parameter

MEXE02 tree view	Parameter name	Description	Initial value
Coordinates	Preset position	Sets the preset position. **[Setting range]** –8,388,608 to 8,388,607 step	0

● Operating method

1) Check the READY output is ON.
2) Turn the P-PRESET input ON
3) When the driver internal processing is completed, the HOME-P output will be turned ON.
4) Check the HOME-P output has been turned ON, and then turn the P-PRESET input OFF.

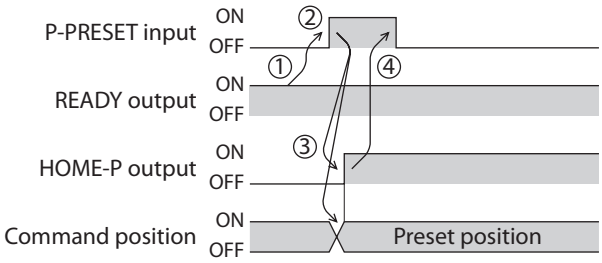

6 Continuous operation

The motor operates continuously while the FWD or RVS input is ON.
Operation is performed based on the FWD or RVS input and the operating speed corresponding to the selected operation data No. When the operation data No. is changed during continuous operation, the speed will change to the speed specified by the new operation data No.
When the FWD or RVS input is turned OFF, the motor will decelerate to a stop. If the signal of the same direction is turned ON again during deceleration, the motor will accelerate and continue operating.
If the FWD and RVS inputs are turned ON simultaneously, the motor will decelerate to a stop.

■ Operation data

Operation data for continuous operation are as follows.

MEXE02 tree view	Setting item	Description	Initial value
Operation data	Operating speed	Sets the operating speed in continuous operation. **[Setting range]** 1 to 1,000,000 Hz	1000
	Acceleration	Sets the acceleration rate (acceleration time) in continuous operation. * **[Setting range]** 1 to 1,000,000 (1=0.001 ms/kHz or 1=0.001 s)	1000
	Deceleration	Sets the deceleration rate (deceleration time) in continuous operation. * **[Setting range]** 1 to 1,000,000 (1=0.001 ms/kHz or 1=0.001 s)	1000

* The acceleration/deceleration for continuous operation can be set as follows using the "acceleration/deceleration type" parameter:
Separate: The acceleration/deceleration set under the applicable operation data No. will be followed (Each 64 data for acceleration and deceleration).
Common: The setting of the "common acceleration" and "common deceleration" parameter will be followed (Each 1 data for acceleration and deceleration).

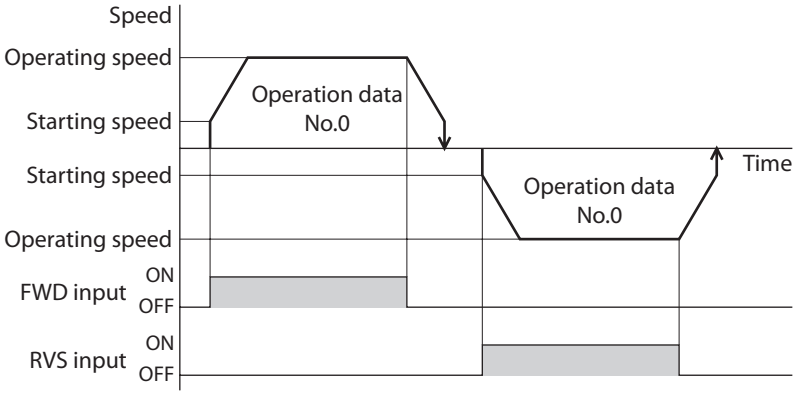

6-1 Starting method of continuous operation

When selecting the operation data No. and turning the FWD input or RVS input ON, continuous operation will be started.
Select an operation data based on a combination of ON/OFF status of the M0 to M5 inputs. See p.95 for details.

Operation data No.	M5	M4	M3	M2	M1	M0
0	OFF	OFF	OFF	OFF	OFF	OFF
1	OFF	OFF	OFF	OFF	OFF	**ON**
2	OFF	OFF	OFF	OFF	**ON**	OFF
. . .	. . .	. . .	. . .	. . .	. . .	. . .
61	**ON**	**ON**	**ON**	**ON**	OFF	**ON**
62	**ON**	**ON**	**ON**	**ON**	**ON**	OFF
63	**ON**	**ON**	**ON**	**ON**	**ON**	**ON**

- **Operating method**

1) Check the READY output is ON.
2) Select the operation data No. by a combination of the M0 to M5 inputs and turn the FWD input ON.
3) The motor starts continuous operation. The READY output will be turned OFF.
4) Select the operation data No.1 by turning the M0 input ON. The motor accelerates to the operating speed of the operation data No.1.
5) Select the operation data No.0 by turning the M0 input OFF. The motor decelerates to the operating speed of the operation data No.0.
6) Turn the FWD input OFF.
7) The motor will decelerate to a stop and the READY output will be turned ON.

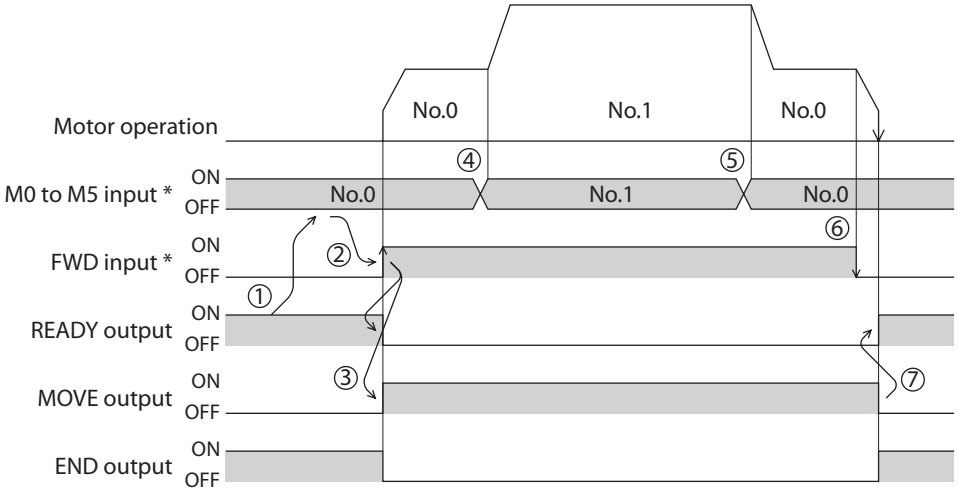

* In direct I/O, turn the FWD input or RVS input ON after setting the M0 to M5 inputs. In remote I/O, the operation will be performed even when turning the M0 to M5 inputs and the FWD (RVS) input ON simultaneously.

- **Operating method; When combining the FWD input and RVS input**

1) Check the READY output is ON.
2) Select the operation data No. by a combination of the M0 to M5 inputs and turn the FWD input ON.
3) The motor starts continuous operation. The READY output will be turned OFF.
4) Turn the FWD input OFF. The motor will decelerate.
5) Turn the FWD input ON while the motor is decelerating. The motor accelerates again.
6) Turn the FWD input OFF. The motor will decelerate.
7) Turn the RVS input ON while the motor is decelerating. The motor will stop once, and start rotating in the reverse direction.
8) When turning the FWD input ON while the RVS input is ON, the motor will decelerate.
9) The motor will decelerate to a stop and the MOVE output will be turned OFF.
10) When turning both the FWD input and RVS input OFF, the READY output will be turned ON.

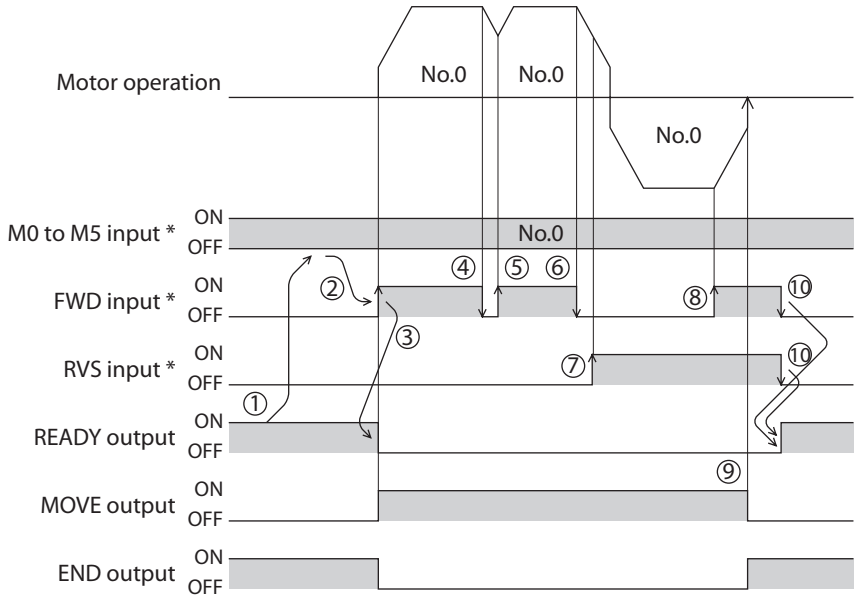

* In direct I/O, turn the FWD input or RVS input ON after setting the M0 to M5 inputs.
In remote I/O, the operation will be performed even when turning the M0 to M5 inputs and the FWD (RVS) input ON simultaneously.

6-2 Variable speed operation

■ When acceleration/deceleration is "separate"

● Acceleration/deceleration unit: ms/kHz

When accelerating

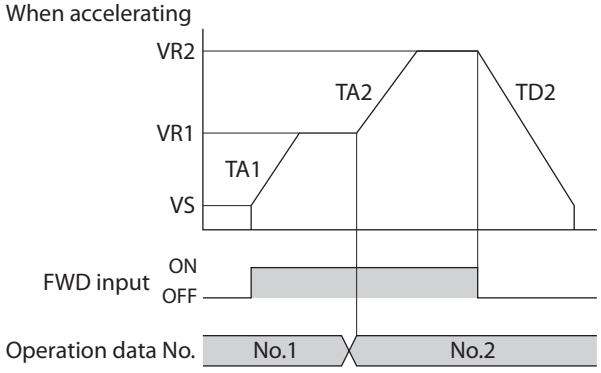

When decelerating

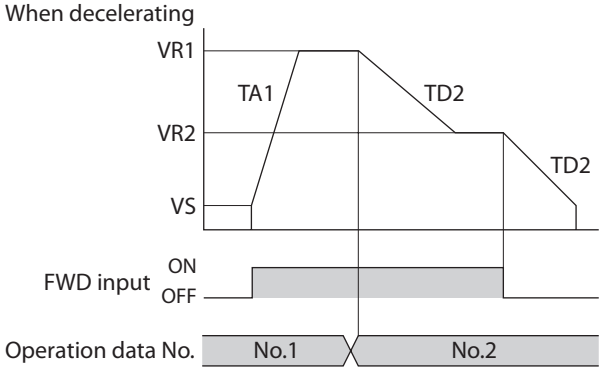

• Explanation of labels
VS: Starting speed (Hz)
VR1: Operating speed of operation data No.1 (Hz)
VR2: Operating speed of operation data No.2 (Hz)
TA1: Acceleration rate of operation data No.1 (ms/kHz)
TA2: Acceleration rate of operation data No.2 (ms/kHz)
TD2: Deceleration rate of operation data No.2 (ms/kHz)

● Acceleration/deceleration unit: s

When accelerating

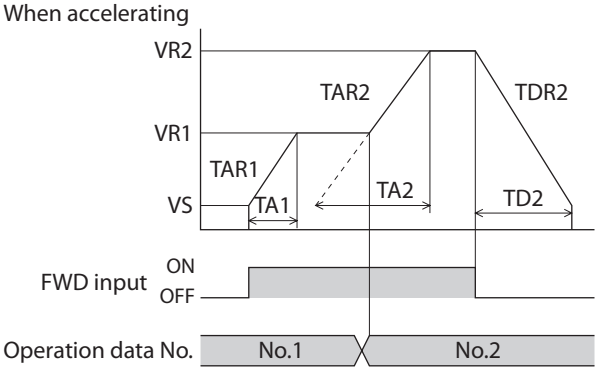

When decelerating

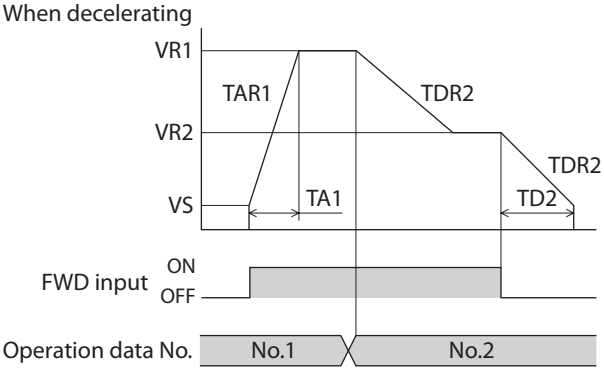

• Explanation of labels
VS: Starting speed (Hz)
VR1: Operating speed of operation data No.1 (Hz)
VR2: Operating speed of operation data No.2 (Hz)
TA1: Acceleration time of operation data No.1 (s)
TA2: Acceleration time of operation data No.2 (s)
TD2: Deceleration time of operation data No.2 (s)
TAR1: Acceleration rate of operation data No.1 (Hz/s)
TAR2: Acceleration rate of operation data No.2 (Hz/s)
TDR2: Deceleration rate of operation data No.2 (Hz/s)

• Calculation method for acceleration/deceleration rate
TAR1 = (VR1 - VS) / TA1
TAR2 = (VR2 - VS) / TA2
TDR2 = (VR2 - VS) / TD2

■ When acceleration/deceleration is "common"

● Acceleration/deceleration unit: ms/kHz

When accelerating

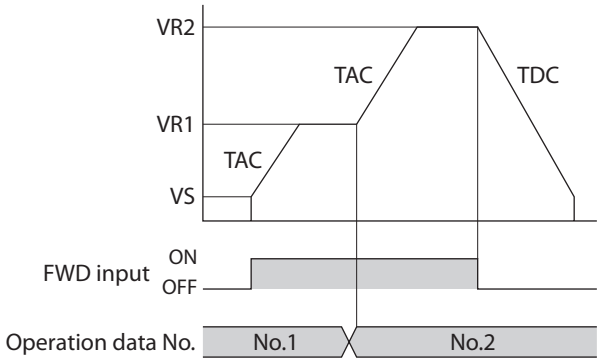

When decelerating

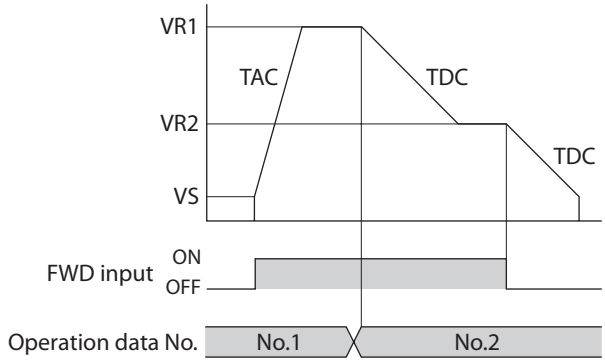

- Explanation of labels
  VS: Starting speed (Hz)
  VR1: Operating speed of operation data No.1 (Hz)
  VR2: Operating speed of operation data No.2 (Hz)
  TAC: Common acceleration rate (ms/kHz)
  TDC: Common deceleration rate (ms/kHz)

● Acceleration/deceleration unit: s

When accelerating

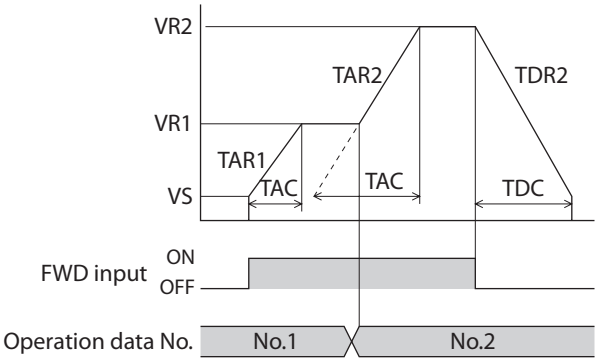

When decelerating

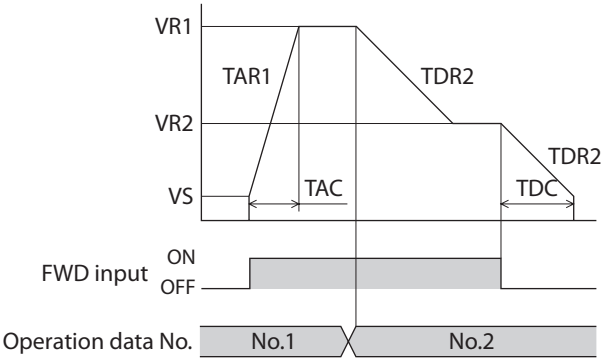

- Explanation of labels
  VS: Starting speed (Hz)
  VR1: Operating speed of operation data No.1 (Hz)
  VR2: Operating speed of operation data No.2 (Hz)
  TAC: Common acceleration time (s)
  TDC: Common deceleration time (s)
  TAR1: Acceleration rate of operation data No.1 (Hz/s)
  TAR2: Acceleration rate of operation data No.2 (Hz/s)
  TDR2: Deceleration rate of operation data No.2 (Hz/s)

- Calculation method for acceleration/deceleration rate
  TAR1 = (VR1 - VS) / TAC
  TAR2 = (VR2 - VS) / TAC
  TDR2 = (VR2 - VS) / TDC

7 Other operation

7-1 JOG operation

JOG operation is a function to perform positioning operation of the travel amount set in the "JOG travel amount" parameter.
When the +JOG signal to ON, JOG operation is in the positive direction.
When the –JOG signal to ON, JOG operation is in the negative direction.
This function is convenient for fine adjustment of the position.

- **Related parameter**

MEXE02 tree view	Parameter name	Description	Initial value
Operation	JOG operating speed	Sets the operating speed for JOG operation. **[Setting range]** 1 to 1,000,000 Hz	1000
	Acceleration/ deceleration rate of JOG	Sets the acceleration/deceleration rate (acceleration/ deceleration time) for JOG operation. **[Setting range]** 1 to 1,000,000 (1=0.001 ms/kHz or 1=0.001 s)	1000
	JOG starting speed	Sets the starting speed for JOG operation. **[Setting range]** 0 to 1,000,000 Hz	500
	JOG travel amount	Sets the travel amount for JOG operation. **[Setting range]** 1 to 8,388,607 step	1

- **Operation example**

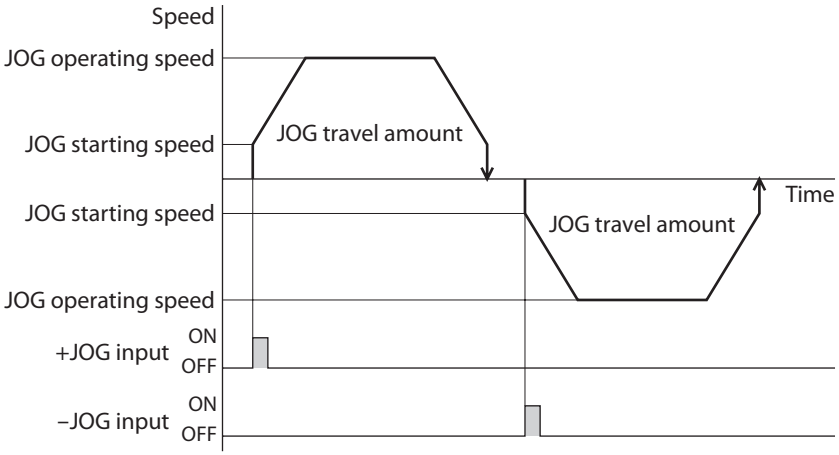

- **Operating method**

1) Check the READY output is ON.
2) Turn the +JOG input ON.
3) The motor starts positioning operation.
4) Check the READY output has been turned OFF and turn the +JOG input OFF.
5) When the positioning operation is completed, the READY output will be turned ON.

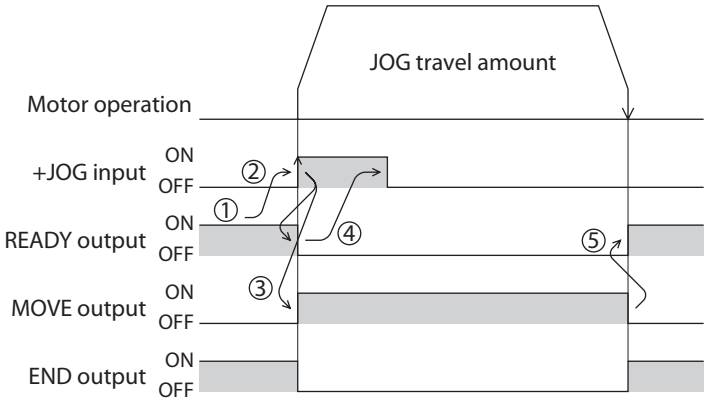

7-2 Test operation

Test operation is performed using the **MEXE02** or **OPX-2A**. JOG operation and teaching function can be performed. Refer to the "Support software **MEXE02** OPERATING MANUAL" when setting with the **MEXE02**, and p.123 when setting with the **OPX-2A**.

■ JOG operation

Connection condition or operation status for the motor and driver can be checked using JOG operation.

Example: When performing test operation with the OPX-2A

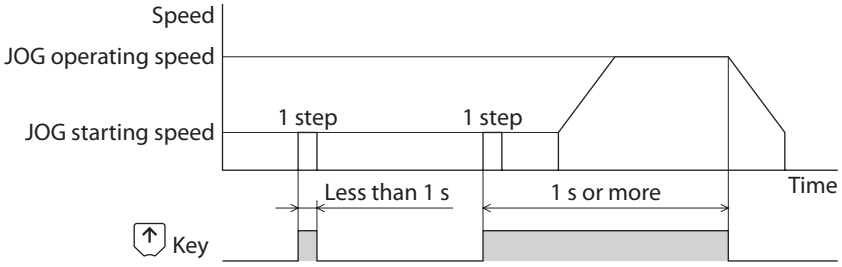

■ Teaching

This is a function to move the motor using the **MEXE02** or **OPX-2A** and set the current position as the position (travel amount) of the operation data. When the position (travel amount) is set using teaching function, the "operation mode" will always be the absolute mode.
The operating speed, acceleration/deceleration and starting speed of teaching function are same as those of JOG operation.

memo Perform teaching function when the position origin is set. See p.200 for setting the position origin.

7-3 Automatic return operation

When a position deviation occurs by an external force while the motor is in a non-excitation state, the motor can automatically return to the position where the motor last stopped.
When the power is turned on and motor is reexcited by turning the C-ON input ON or turning the FREE input OFF, automatic return operation will be executed under the following conditions;

- When the main power is turned on
- When the C-ON input is turned from OFF to ON
- When the FREE input is turned from ON to OFF

● Related parameter

MEXE02 tree view	Parameter name	Description	Initial value
Operation	Automatic return operation	Sets whether to enable or disable automatic return operation. **[Setting range]** 0: Disable 1: Enable	0
	Operation speed of automatic return	Sets the operating speed for automatic return operation. **[Setting range]** 1 to 1,000,000 Hz	1000
	Acceleration (deceleration) of automatic return	Sets the acceleration/deceleration rate (acceleration/deceleration time) for automatic return operation. **[Setting range]** 1 to 1,000,000 (1=0.001 ms/kHz or 1=0.001 s)	1000
	Starting speed of automatic return	Sets the starting speed for automatic return operation. **[Setting range]** 0 to 1,000,000 Hz	500

● Example of automatic return operation

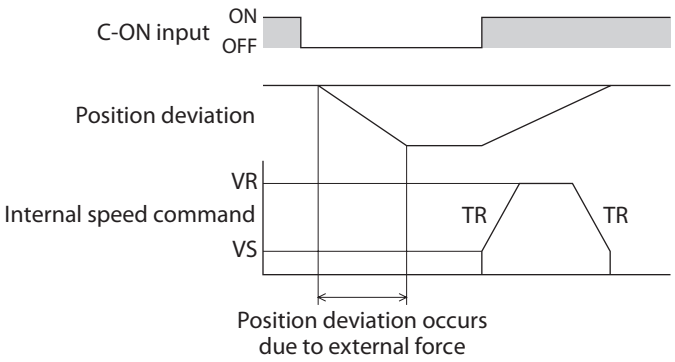

VS: Starting speed of automatic return
VR: Operation speed of automatic return
TR: Acceleration (deceleration) of automatic return

memo

- Automatic return operation will not be executed immediately after turning on the DC power supply or executing the configuration command.
- If an alarm generates while the motor is in a non-excitation state, the automatic return operation will not be executed normally.

7-4 Stop operation

■ STOP action

When the STOP input is turned ON or STOP is commanded via RS-485 communication while the motor is operating, the motor will stop.
The stopping mode is determined by the setting of the "STOP input action" parameter.
For example, the operation when setting "STOP input action" parameter to "deceleration stop" is shown in the figure to the right.

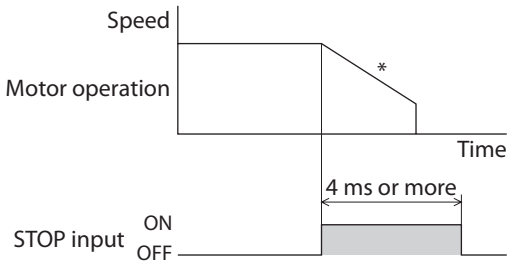

* The deceleration time is determined by the setting of "deceleration" in the operation data.

■ Hardware overtravel

Hardware overtravel is the function that limits the operation range by installing the limit sensor (±LS) at the upper and lower limit of the operation range.
If the "hardware overtravel" parameter is set to "enable," the motor can be stopped when detecting the limit sensor.
The stopping mode is determined by the setting of "overtravel action" parameter.
The operation example is shown in the figure.

• Immediate stop

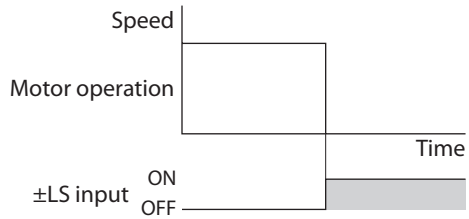

• Decelerate stop

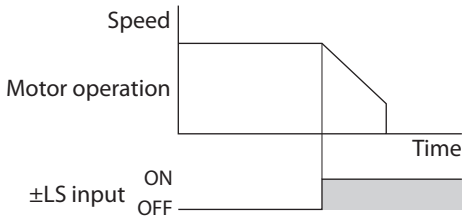

Related parameter

MEXE02 tree view	Parameter name	Description	Initial value
I/O	Hardware overtravel	Sets whether to enable or disable hardware overtravel detection using ±LS inputs. **[Setting range]** 0: Disable 1: Enable	1
	Overtravel action	Sets the motor stop action to take place upon the occurrence of overtravel. **[Setting range]** 0: Immediate stop 1: Decelerate stop	0

Note When the "overtravel action" parameter is set to "decelerate stop," consider the distance from the start of deceleration to the stop, and do not allow a load to contact with the edge of the mechanism.

■ Software overtravel

The software overtravel is a function that limits the range of movement using the parameter.
If the "software overtravel" parameter is set to "enable," the motor can be stopped when exceeding the software limit.
The stopping mode is determined by the setting of "overtravel action" parameter. For example, setting the "overtravel action" parameter to "decelerate stop" can decelerate the motor according to the deceleration rate and stop it at the software limit.
The operation example is shown when an operation where a software limit is to be exceeded is started.

• Immediate stop

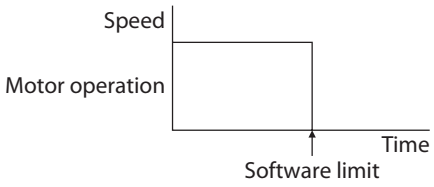

• Decelerate stop

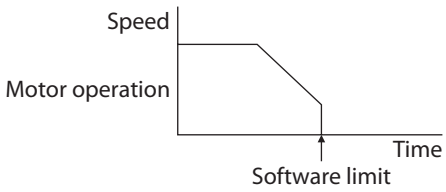

Related parameter

MEXE02 tree view	Parameter name	Description	Initial value
I/O	Overtravel action	Sets the motor stop action to take place upon the occurrence of overtravel. **[Setting range]** 0: Immediate stop 1: Decelerate stop	0
Coordinates	Software overtravel	Sets whether to enable or disable software overtravel detection using soft limits. **[Setting range]** 0: Disable 1: Enable	1
	Positive software limit	Sets the value of soft limit in positive direction. **[Setting range]** –8,388,608 to 8,388,607 step	8,388,607
	Negative software limit	Sets the value of soft limit in negative direction. **[Setting range]** –8,388,608 to 8,388,607 step	–8,388,608

memo
- Software overtravel will become effective after the position origin is set. See p.200 for setting the position origin.
- When the value of the software limit is changed while the motor is operating, the motor will stop according to the setting of the "overtravel action" parameter.

■ Escape from the limit sensor

It is possible to escape in the negative direction when detecting the positive direction limit, and possible to escape in the positive direction when detecting the negative direction limit.
The following operations can be used when escaping from the limit sensor.

Types of operation	Limit sensors (±LS)	Software limit
Positioning operation	Will not operate (unable to escape)	Allowed to operate (able to escape)
Continuous operation Test operation Return-to-home operation	Allowed to operate (able to escape)	

8 Coordination management

8-1 Position coordinate management

The driver manages the motor position information. If the absolute-position backup system is used connecting an accessory battery set, the position information is kept even when the power is turned off.
Refer to p.54 (AC power input), p.84 (DC power input) for accessory.

■ Position origin for the driver

- **When the absolute-position backup system is disabled**

  The position origin will be set whenever one of the following operations is executed:
  - Return-to-home operation
  - P-PRESET input is turned ON

- **When the absolute-position backup system is enabled**

  When the absolute-position backup system is enabled, once the position origin is set, there is no need to set the position origin again even if the power is turned off. However, if the absolute position error alarm generates, the position origin will be lost. In this case, after clearing the absolute position error alarm by the P-CLR input, set the position origin by executing one of the followings.
  - Return-to-home operation
  - P-PRESET input is turned ON

■ When the position origin has not been set

If the "return-to-home incomplete alarm" parameter is set to "enable," positioning operations can be prohibited while the position origin has not been set.
The return-to-home incomplete alarm will generate if the START input, SSTART input or the MS0 to MS5 inputs are turned ON while the position origin has not been set. See p.145 for alarm.

Related parameter

MEXE02 tree view	Parameter name	Description	Initial value
Alarm	Return-to-home incomplete alarm	When the positioning operation is started while the position origin has not been set, selects whether the alarm generates or not. **[Setting range]** 0: Disable 1: Enable	0

8-2 Wrap function

The wrap function is a function that resets the command position or multi-rotation data to 0 whenever the command position exceeds the set value by the "wrap setting range" parameter. Since the multi-rotation data is also reset to 0, the unidirectional continuous rotation with the absolute-position backup system will be possible.
The command position varies in a range of "0 to (wrap setting value−1)."

Related parameter

MEXE02 tree view	Parameter name	Description	Initial value
Coordinates	Wrap setting	Sets whether to enable or disable wrap function. **[Setting range]** 0: Disable 1: Enable	0
	Wrap setting range	Sets the wrap setting range. **[Setting range]** 1 to 8,388,607 step	1000

memo
- When setting the "wrap setting" parameter to "enable," the software overtravel will be disabled. (It is disabled even when setting the "software overtravel" parameter to "enable.")
- If the "wrap setting" parameter or "wrap setting range" parameter is changed while the "absolute back-up system" parameter is "enable," the absolute position may be lost. Perform return-to-home operation or the P-PRESET when the wrap settings are changed.

■ Setting condition of wrap function

Condition 1: $\frac{\text{Electronic gear B} \times 1000}{\text{Electronic gear A} \times 50} = \text{An integer}$

Condition 2: $\text{Wrap setting value} \times \frac{\text{Electronic gear A} \times 50}{\text{Electronic gear B} \times 1000} = \text{An integer}$

The wrap setting error warning will generate when not meeting these formulas.

memo
When not meeting these formulas while the "wrap setting" parameter is "enable," the wrap setting error warning will generate. If the power is turned on again or the configuration is executed while the wrap setting error warning is present, the wrap setting error alarm will generate.

■ Example for wrap function

Example of operation when the positioning operation is performed in the following conditions.

- Wrap setting range: 3600
- Resolution: 1000 P/R (electronic gear A=1, electronic gear B=1)
- Command position: 900

Condition 1: $\frac{\text{Electronic gear B} \times 1000}{\text{Electronic gear A} \times 50} = \frac{1 \times 1000}{1 \times 50} = 20$

Condition 2: Wrap setting value $\times \frac{\text{Electronic gear A} \times 50}{\text{Electronic gear B} \times 1000} = 3600 \times \frac{1 \times 50}{1 \times 1000} = 180$

The calculation result of these two formulas is an integer and this meets the setting condition.
Following tables are examples when the positioning operation is performed from 900 steps of the command position.

Position	Operation mode: Incremental	Operation mode: Absolute
+1000	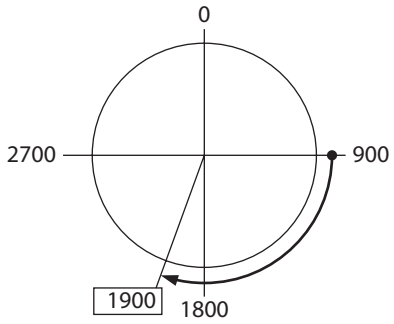	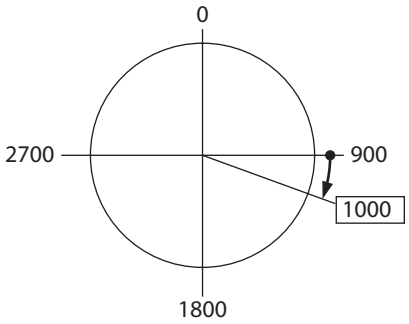
−1000	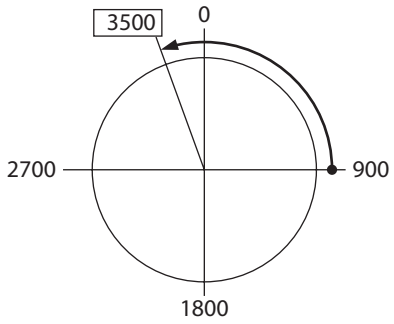	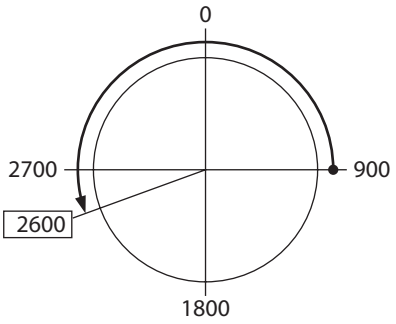
+5000	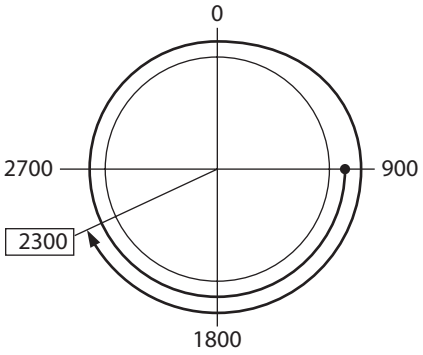	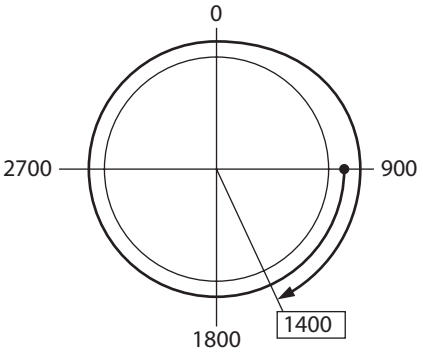
−5000	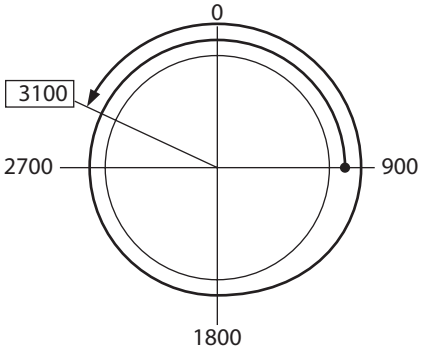	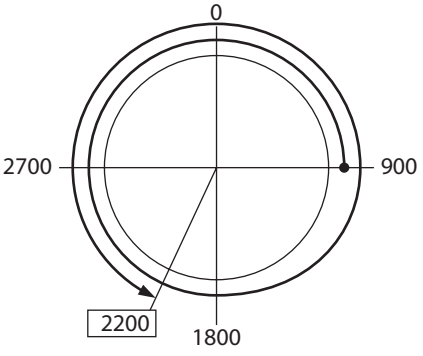

6 Method of control via Modbus RTU (RS-485 communication)

This part explains how to control from the master controller via RS-485 communication. The protocol for the RS-485 communication is the Modbus protocol.

◆Table of contents

1 Guidance 204

2 Communication specifications 210

3 Setting the switches 213

3-1 Setting the AC power input 213

3-2 Setting the DC power input 215

4 Setting of RS-485 communication ... 217

5 Communication mode and communication timing 218

5-1 Communication mode 218

5-2 Communication timing 218

6 Message 219

6-1 Query 219

6-2 Response 221

7 Function code 223

7-1 Reading from a holding register(s) (03h) 223

7-2 Writing to a holding register (06h) 224

7-3 Diagnosis (08h) 225

7-4 Writing to multiple holding registers (10h) 226

8 Register address list 228

8-1 Operation commands 228

8-2 Maintenance commands 230

8-3 Monitor commands 231

8-4 Parameter R/W commands 234

9 Group send 246

10 Setting example of the operation 248

10-1 Positioning operation 248

10-2 Continuous operation 251

10-3 Return-to-home operation 253

11 Detection of communication errors 255

11-1 Communication errors 255

11-2 Alarms and warnings 255

12 Timing charts 256

1 Guidance

If you are new to the **AR** Series FLEX built-in controller type, read this section to understand the operating methods along with the operation flow.
This is an example how to operate the motor based on the operation data and parameters being set to the driver via the master controller.

STEP1	Installation and connection
↓	
STEP2	Setting of switches
↓	
STEP3	Power-on and check of communication parameters
↓	
STEP4	Cycle the power
↓	
STEP5	Operate the motor

Communication parameters are enabled after the power is cycled.

- **Operation condition**

Here, the motor is assumed to be operated under the following conditions.

- Number of drivers connected: 1 unit
- Address number: 1
- Transmission rate: 115,200 bps
- Termination resistor: Enable

Note Before operating the motor, check the condition of the surrounding area to ensure safety.

STEP 1 Check the installation and connection

■ AC power input

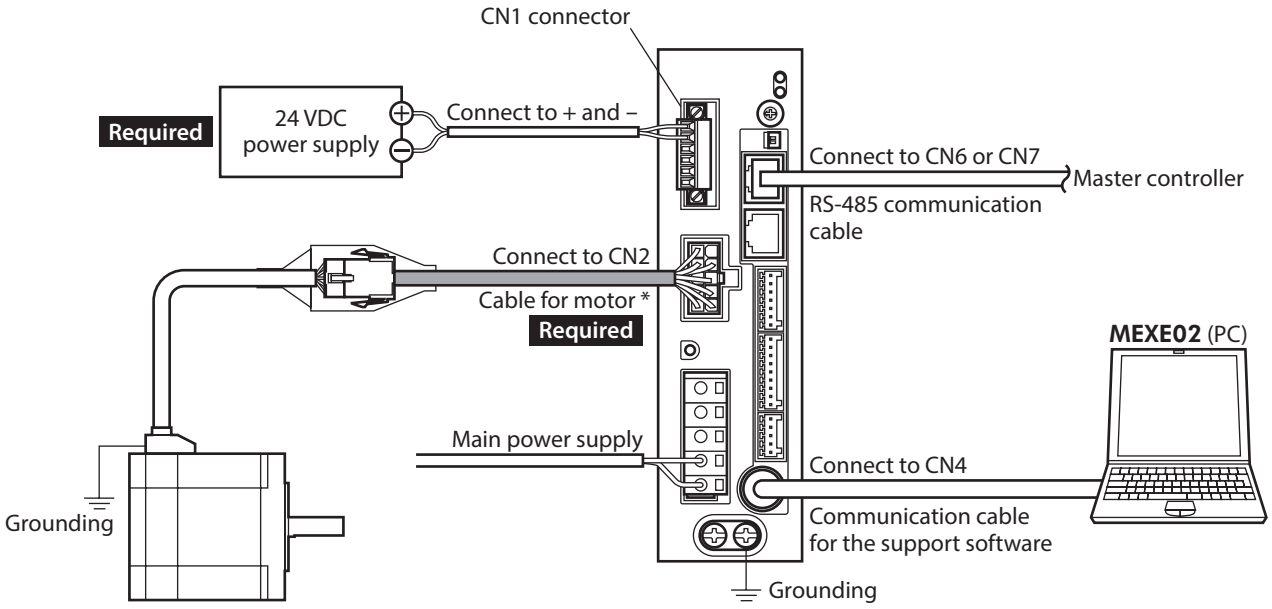

* Cables represented in gray color are supplied with the product or sold separately.

■ DC power input

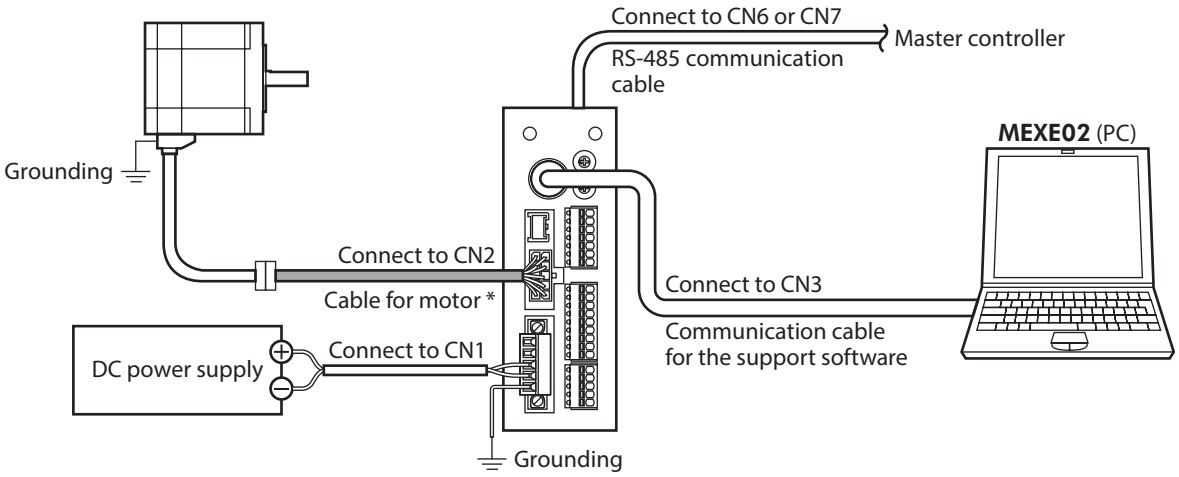

* Cables represented in gray color are supplied with the product or sold separately. Use when the cable length is not long enough.

STEP 2 Setting the switches

Set as shown in the following table with the switches. The status becomes as shown in the following figures after setting.

■ AC power input

Setting item	Switch	Factory setting
Protocol: Modbus protocol	Turn No.2 of SW4 ON	OFF
Address number: 1	Turn No.1 of SW4 OFF, set ID to 1	No.1 of SW4: OFF, ID: 0
Transmission rate: 115,200 bps	Set SW2 to 4	7
Termination resistor: ON	Set Nos.1 and 2 of TERM. ON	OFF

● Driver front side

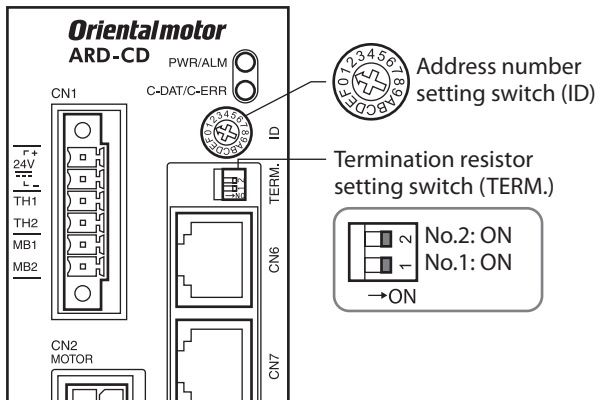

● Driver bottom side

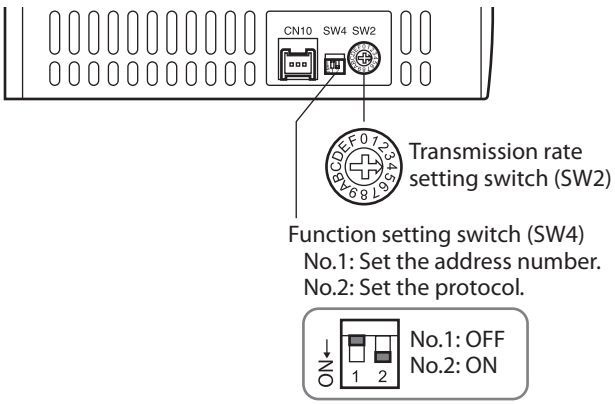

■ DC power input

Setting item	Switch	Factory setting
Protocol: Modbus protocol	Turn No.2 of SW3 ON	OFF
Address number: 1	Turn No.1 of SW3 OFF, set SW1 to 1	No.1 of SW3: OFF, SW1: 0
Transmission rate: 115,200 bps	Set SW2 to 4	7
Termination resistor: ON	Set No.4 of SW3 ON	OFF

● Driver front side

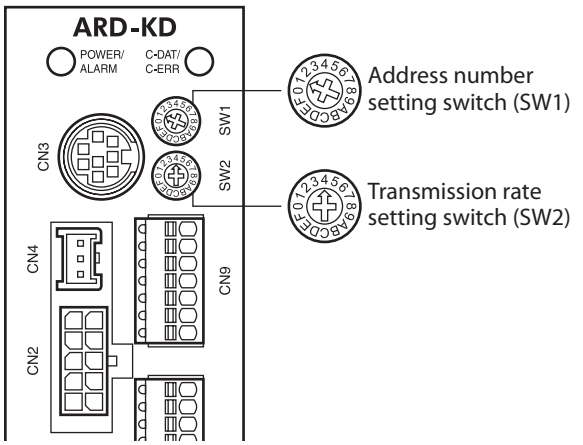

● Driver bottom side

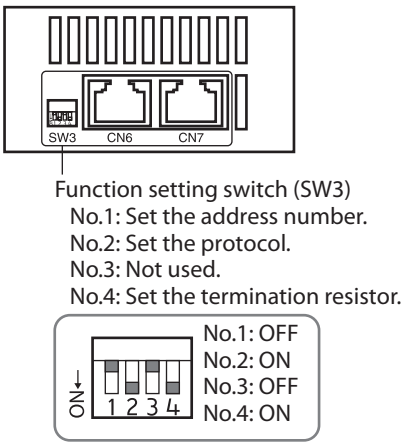

STEP 3 Turn on the power and check the communication parameters

Check the following communication parameters with the **MEXE02**.
If communication cannot be established, review the communication parameters of the driver.

MEXE02 tree view	Parameter name
Communication	• Communication parity [Initial value: 1 (even number)]
	• Communication stop bit [Initial value: 0 (1 bit)]
	• Transmission waiting time [Initial value: 100 (10.0 ms)]

memo Set the transmission interval of frames sent from the master to be longer than the silent interval of the driver. When the transmission rate is 115,200 bps, the silent interval of the driver is 2.5 ms.

STEP 4 Cycle the power

The switches of the driver and the communication parameters are enabled after the power is cycled.

STEP 5 Send a message and operate the motor

As an example, here is a description how to execute the following positioning operation.

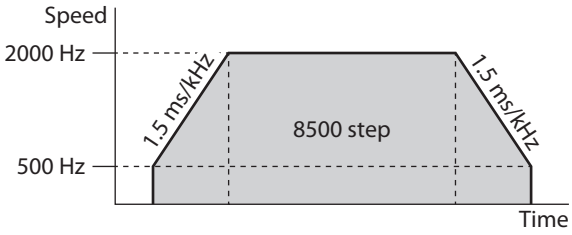

1. Send the following five queries and set the operation data.

• Operation mode of operation data No.0

Field name		Data	Description
Slave address		01h	Slave address 1
Function code		06h	Writing to a holding register
Data	Register address (upper)	05h	Operation mode No.0 (0501h)
	Register address (lower)	01h	
	Value written (upper)	00h	Incremental (0000h)
	Value written (lower)	00h	
Error check (lower)		D8h	Calculation result of CRC-16
Error check (upper)		C6h	

• Position of operation data No.0

Field name		Data	Description
Slave address		01h	Slave address 1
Function code		06h	Writing to a holding register
Data	Register address (upper)	04h	Position No.0 (0401h)
	Register address (lower)	01h	
	Value written (upper)	21h	8500 step (2134h)
	Value written (lower)	34h	
Error check (lower)		C0h	Calculation result of CRC-16
Error check (upper)		BDh	

• Operating speed of operation data No.0

Field name		Data	Description
Slave address		01h	Slave address 1
Function code		06h	Writing to a holding register
Data	Register address (upper)	04h	Operating speed No.0 (0481h)
	Register address (lower)	81h	
	Value written (upper)	07h	2000 Hz (07D0h)
	Value written (lower)	D0h	
Error check (lower)		DBh	Calculation result of CRC-16
Error check (upper)		7Eh	

• Acceleration of operation data No.0

Field name		Data	Description
Slave address		01h	Slave address 1
Function code		06h	Writing to a holding register
Data	Register address (upper)	06h	Acceleration No.0 (0601h)
	Register address (lower)	01h	
	Value written (upper)	05h	1.5 ms/kHz (05DCh)
	Value written (lower)	DCh	
Error check (lower)		DAh	Calculation result of CRC-16
Error check (upper)		4Bh	

• Deceleration of operation data No.0

Field name		Data	Description
Slave address		01h	Slave address 1
Function code		06h	Writing to a holding register
Data	Register address (upper)	06h	Deceleration No.0 (0681h)
	Register address (lower)	81h	
	Value written (upper)	05h	1.5 ms/kHz (05DCh)
	Value written (lower)	DCh	
Error check (lower)		DBh	Calculation result of CRC-16
Error check (upper)		A3h	

2. Send the following two queries and perform operation.

• START input ON (To start operation for operation data No.0)

Field name		Data	Description
Slave address		01h	Slave address 1
Function code		06h	Writing to a holding register
Data	Register address (upper)	00h	Driver input command (007Dh)
	Register address (lower)	7Dh	
	Value written (upper)	00h	START ON (0008h)
	Value written (lower)	08h	
Error check (lower)		18h	Calculation result of CRC-16
Error check (upper)		14h	

• START input OFF

Field name		Data	Description
Slave address		01h	Slave address1
Function code		06h	Writing to a holding register
Data	Register address (upper)	00h	Driver input command (007Dh)
	Register address (lower)	7Dh	
	Value written (upper)	00h	START OFF (0000h)
	Value written (lower)	00h	
Error check (lower)		19h	Calculation result of CRC-16
Error check (upper)		D2h	

3. Check the motor rotates according to the setting.

STEP 6 Were you able to operate the motor properly?

How did it go? Were you able to operate the motor properly? If the motor does not function, check the following points:

- Is any alarm present?
- Are the power supply, motor and RS-485 communication cable connected securely?
- Are the slave address, transmission rate and termination resistor set correctly?
- Is the C-DAT/C-ERR LED turned off? Or is it lit in red? (A communication erro has occured.)

2 Communication specifications

Electrical characteristics	In conformance with EIA-485, straight cable Use a twisted pair cable (TIA/EIA-568B CAT5e or higher is recommended) and keep the total wiring distance including extension to 50 m (164 ft.) or less. *
Communication mode	Half duplex Asynchronous mode (data: 8 bits, stop bit: 1 bit/2 bits, parity: none/even number/odd number)
Transmission rate	Selectable from 9600 bps, 19200 bps, 38400 bps, 57600 bps and 115,200 bps.
Protocol	Modbus RTU mode
Connection figure	Up to 31 drivers can be connected to one master controller.

* If the motor cable or power supply cable generates an undesirable amount of noise depending on the wiring or configuration, shield the cable or install a ferrite core.

■ Connection example

The figure shows the model for AC power input.

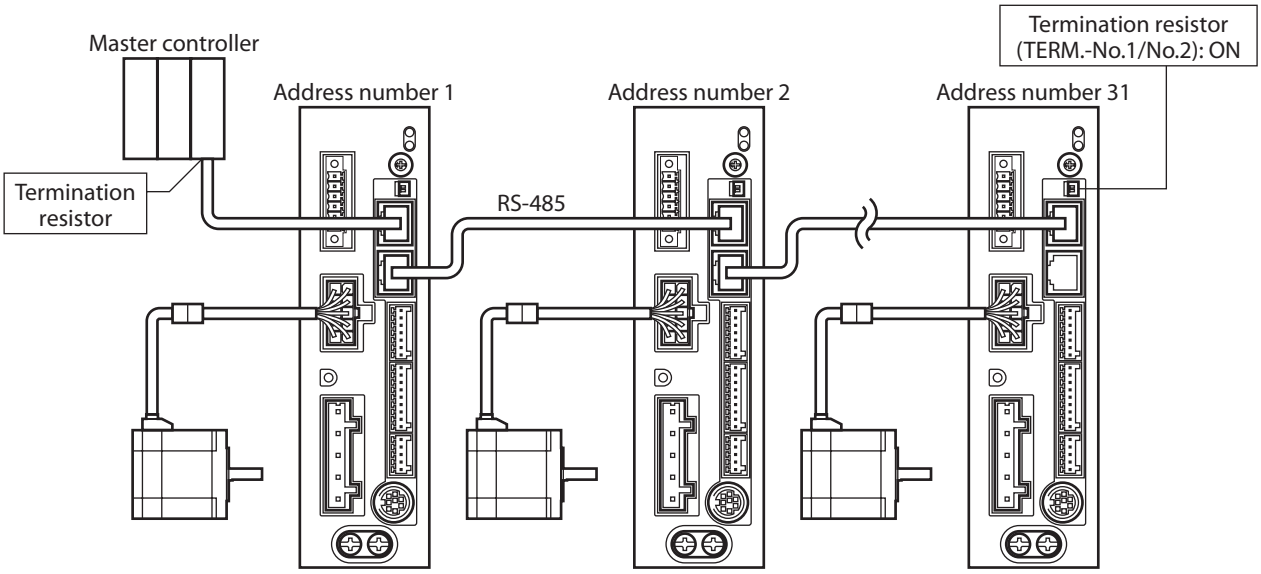

■ Internal circuit diagram

● AC power input

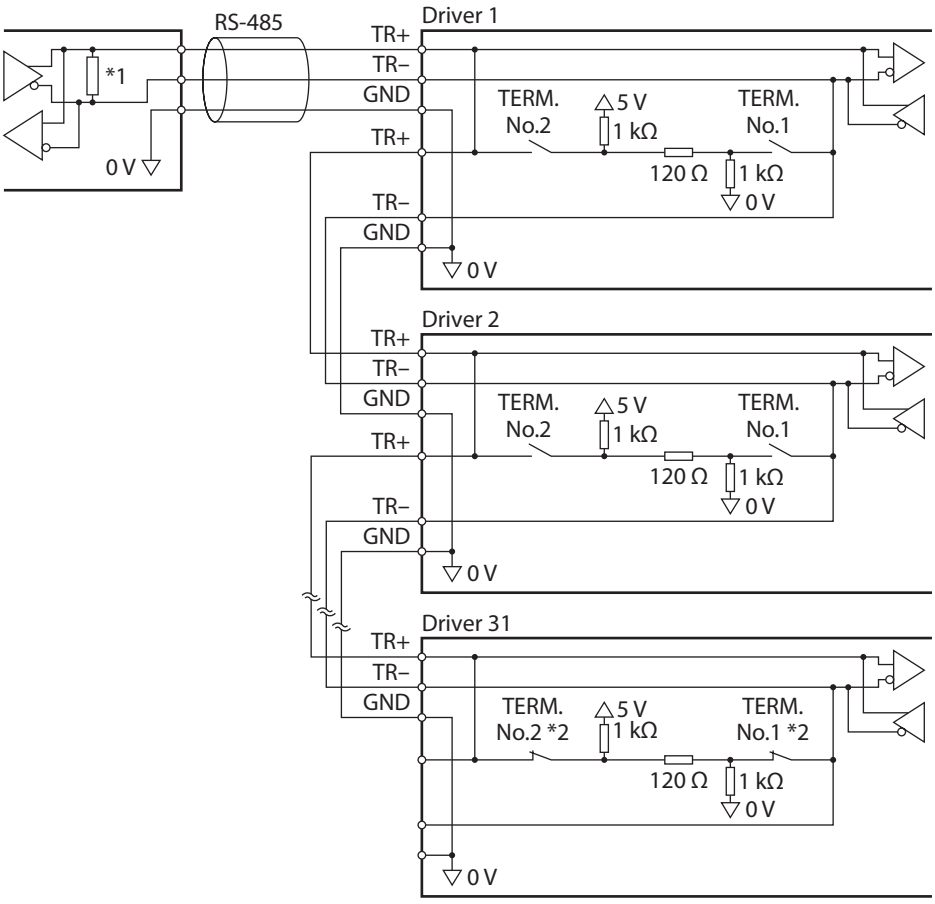

*1 Termination resistor 120 Ω
*2 Turn the termination resistor ON (TERM.-Nos.1 and 2).

- **DC power input**

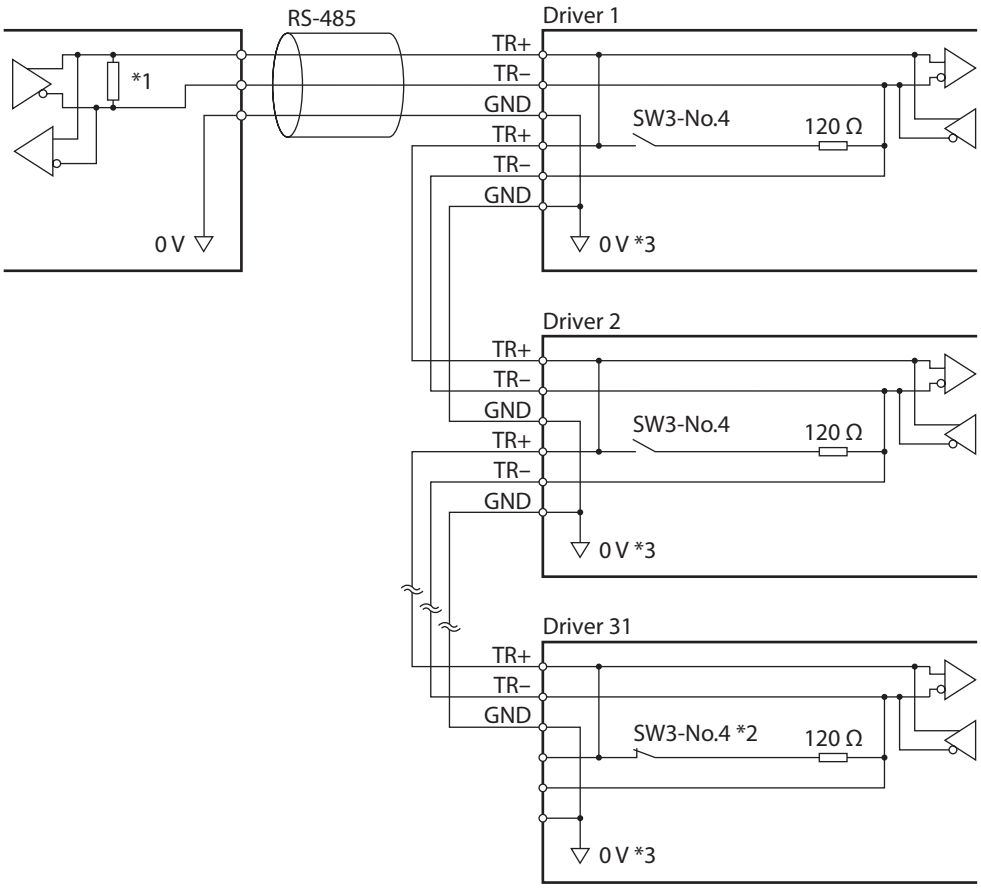

*1 Termination resistor 120 Ω
*2 Turn the termination resistor ON (SW3-No.4).
*3 Common with GND of CN1 (Non-isolated)

3 Setting the switches

Switches differ in the AC power input driver and the DC power input driver. Set properly.

3-1 Setting the AC power input

The following figures show the status of factory setting.

● Driver front side

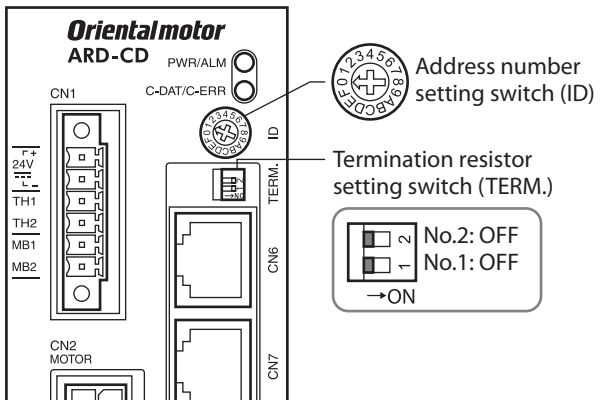

● Driver bottom side

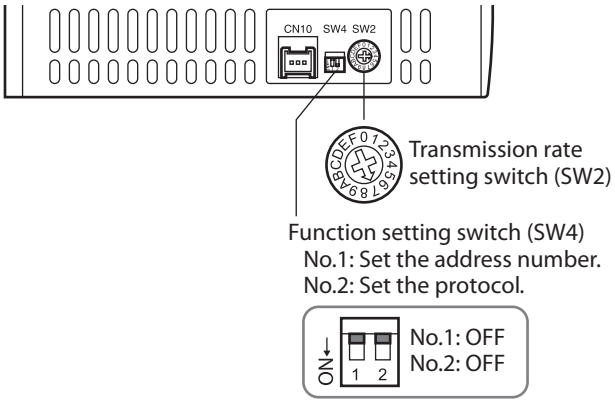

memo Be sure to turn off the driver power before setting the switches. If the switches are set while the power is still on, the new switch settings will not become effective until the driver power is cycled.

■ Protocol

Set the SW4-No.2 of the function setting switch to ON. The Modbus protocol is selected.

Factory setting OFF

SW4-No.2	Protocol
ON	Modbus RTU protocol
OFF	Connect to the network converter

■ Transmission rate

Set the transmission rate using transmission rate setting switch (SW2).
The transmission rate to be set should be the same as the transmission rate of the master controller.

Factory setting 7

SW2	Transmission rate (bps)
0	9600
1	19200
2	38400
3	57600
4	115,200
5 to F	Not used

memo Do not set SW2 to positions 5 to F.

■ Address number (slave address)

Set the address number (slave address) using the address number setting switch (ID) and SW4-No.1 of the function setting switch. Make sure each address number (slave address) you set for each driver is unique.
Address number (slave address) 0 is reserved for broadcasting, so do not use this address.

Factory setting ID: 0, SW4-No.1: OFF

ID	SW4-No.1	Address number (slave address)
0	OFF	Not used
1		1
2		2
3		3
4		4
5		5
6		6
7		7
8		8
9		9
A		10
B		11
C		12
D		13
E		14
F		15

ID	SW4-No.1	Address number (slave address)
0	ON	16
1		17
2		18
3		19
4		20
5		21
6		22
7		23
8		24
9		25
A		26
B		27
C		28
D		29
E		30
F		31

■ Termination resistor

Use a termination resistor for the driver located farthest away (positioned at the end) from the master controller. Turn the termination resistor setting switches (TERM.-Nos.1 and 2) ON to set the termination resistor for RS-485 communication (120 Ω).

Factory setting Nos.1 and 2: Both OFF (termination resistor disabled)

TERM.-Nos.1 and 2	Termination resistor (120 Ω)
Both are OFF	Disabled
Both are ON	Enabled

memo If only one of No.1 or No.2 is turned ON, a communication error may occur.

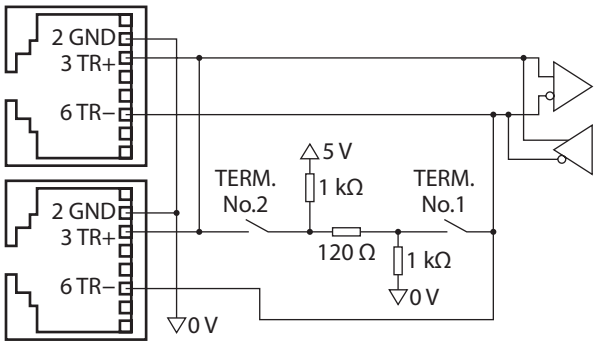

3-2 Setting the DC power input

The following figures show the status of factory setting.

● Driver front side

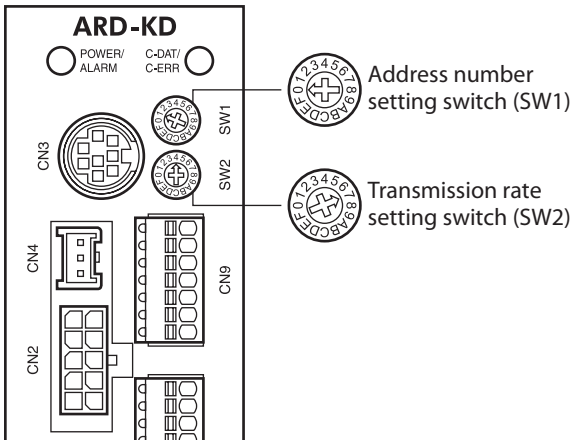

● Driver bottom side

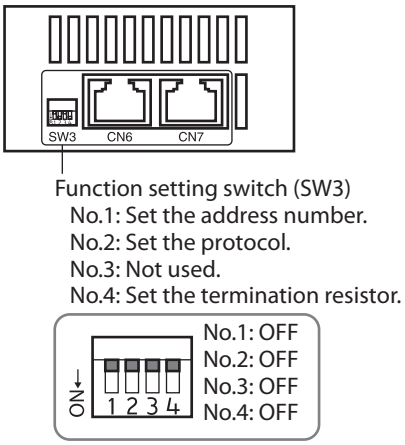

memo Be sure to turn off the driver power before setting the switches. If the switches are set while the power is still on, the new switch settings will not become effective until the driver power is cycled.

■ Protocol

Set the SW3-No.2 of the function setting switch to ON. The Modbus protocol is selected.

Factory setting OFF

SW3-No.2	Protocol
ON	Modbus RTU protocol
OFF	Connect to the network converter

■ Transmission rate

Set the transmission rate using transmission rate setting switch (SW2).
The transmission rate to be set should be the same as the transmission rate of the master controller.

Factory setting 7

SW2	Transmission rate (bps)
0	9600
1	19200
2	38400
3	57600
4	115,200
5 to F	Not used

memo Do not set SW2 to positions 5 to F.

■ Address number (slave address)

Set the address number (slave address) using the address number setting switch (SW1) and SW3-No.1 of the function setting switch. Make sure each address number (slave address) you set for each driver is unique.
Address number (slave address) 0 is reserved for broadcasting, so do not use this address.

Factory setting SW1: 0, SW3-No.1: OFF

SW1	SW3-No.1	Address number (slave address)
0	OFF	Not used
1		1
2		2
3		3
4		4
5		5
6		6
7		7
8		8
9		9
A		10
B		11
C		12
D		13
E		14
F		15

SW1	SW3-No.1	Address number (slave address)
0	ON	16
1		17
2		18
3		19
4		20
5		21
6		22
7		23
8		24
9		25
A		26
B		27
C		28
D		29
E		30
F		31

■ Termination resistor

Use a termination resistor for the driver located farthest away (positioned at the end) from the master controller.
Turn the termination resistor setting switch (SW3-No.4) ON to set the termination resistor for RS-485 communication (120 Ω).

Factory setting OFF (termination resistor disabled)

SW3-No.4	Termination resistor (120 Ω)
OFF	Disabled
ON	Enabled

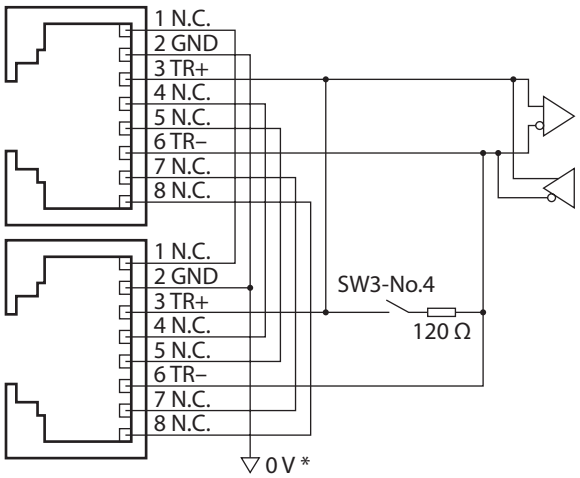

* Common with GND of CN1 (Non-isolated)

4 Setting of RS-485 communication

Set parameters required RS-485 communication first.
When a parameter is changed, the timing to enable the new value varies depending on the parameter. Refer to "Communication parameter" on p.122 for the timing to update each parameter.

■ Parameters set with the MEXE02 or OPX-2A

Set the following parameters using the **MEXE02** or **OPX-2A** since they cannot be set via RS-485 communication.

MEXE02 tree view	Parameter name	Description	Initial value
Communication	Communication parity	Sets the parity of RS-485 communication. **[Setting range]** 0: None 1: Even 2: Odd	1
	Communication stop bit	Sets the stop bit of RS-485 communication. **[Setting range]** 0: 1 bit 1: 2 bits	0
	Transmission waiting time	Sets the transmission waiting time of RS-485 communication. **[Setting range]** 0 to 10000 (1=0.1 ms)	100

■ Parameters set with the MEXE02, OPX-2A or via RS-485 communication

Set the following parameters using the **MEXE02**, **OPX-2A** or via RS-485 communication.

MEXE02 tree view	Parameter name	Description	Initial value
Communication	Communication timeout	Sets the condition in which a communication timeout occurs in RS-485 communication. It is not monitored when the set value is 0. **[Setting range]** 0: Not monitored 1 to 10000 ms	0
	Communication error alarm	Sets the condition in which a RS-485 communication error alarm generates. A communication error alarm generates after a RS-485 communication error has occurred by the number of times set here. **[Setting range]** 1 to 10 times	3

5 Communication mode and communication timing

5-1 Communication mode

Modbus protocol communication is based on the single-master/multiple-slave method. Only the master can issue a query (command). Each slave executes the process requested by query and returns a resonse massage.
The **AR** Series supports only the RTU mode as a transmission mode. It does not support the ASCII mode.
Under this protocol, messages are sent in one of two methods.

- **Unicast mode**

The master sends a command to only one slave.
The slave executes the process and returns a response.

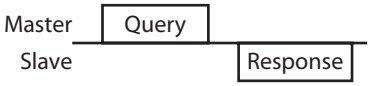

- **Broadcast mode**

If slave address 0 is specified on the master, the master can send a command to all slaves. Each slave executes the process, but does not return a response.

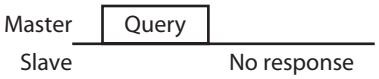

5-2 Communication timing

The communication time monitored by the driver and the communication timing of the master are as follows.

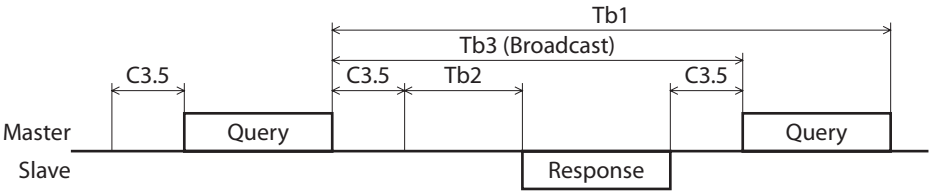

Character	Name	Description
Tb1	Communication timeout	Intervals between received queries are monitored. If no query could be received after the time set in the "communication timeout" parameter, a RS-485 communication timeout alarm generates.
Tb2	Transmission waiting time	The time after the slave switches its communication line to the transmission mode upon receiving a query from the master, until it starts sending a response. Sets using the "transmission waiting time" parameter. The actual transmission waiting time corresponds to the silent interval (C3.5) + transmission waiting time (Tb2).
Tb3	Broadcasting interval	The time until the next query is sent in broadcasting. A time equivalent to or longer than the silent interval (C3.5) plus 5 ms is required.
C3.5	Silent interval	Be sure to provide a waiting time of 3.5 characters or more. If this waiting time is less than 3.5 characters long, the driver cannot respond. See the following table for transmission waiting time.

Transmission waiting time of the "silent interval (C3.5)"

Transmission rate (bps)	Silent interval	Frame interval of master (reference)
9600	4 ms or more	5.0 ms or more
19200 38400 57600 115,200	2.5 ms or more	3.0 ms or more

6 Message

The message format is shown below.

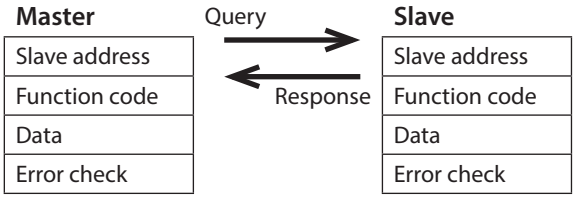

6-1 Query

The query message structure is shown below.

Slave address	Function code	Data	Error check
8 bits	8 bits	N×8 bits	16 bits

■ Slave address

Specify the slave address (unicast mode).
If the slave address is set to 0, the master can send a query to all slaves (broadcast mode).

■ Function code

The function codes and message lengths supported by the driver are as follows.

Function code	Function	Message length		Broadcast
		Query	Response	
03h	Reading from a holding register(s)	8	7 to 37	Impossible
06h	Writing to a holding register	8	8	Possible
08h	Diagnosis	8	8	Impossible
10h	Writing to multiple holding registers	11 to 41	8	Possible

■ Data

Set data associated with the selected function code. The specific data length varies depending on the function code.

■ Error check

In the Modbus RTU mode, error checks are based on the CRC-16 method. The slave calculates a CRC-16 of each received message and compares the result against the error check value included in the message. If the calculated CRC-16 value matches the error check value, the slave determines that the message is normal.

- **CRC-16 calculation method**

1. Calculate an exclusive-OR (XOR) value of the default value of FFFFh and slave address (8 bits).
2. Shift the result of step 1 to the right by 1 bit. Repeat this shift until the overflow bit becomes "1."
3. Upon obtaining "1" as the overflow bit, calculate an XOR of the result of step 2 and A001h.
4. Repeat steps 2 and 3 until a shift is performed eight times.
5. Calculate an XOR of the result of step 4 and function code (8 bits).
   Repeat steps 2 to 4 for all bytes.
   The final result gives the result of CRC-16 calculation.

- **Example of CRC-16 calculation**

The following table is a calculation example when setting the slave address of the first byte to 02h and setting the function code of the second byte to 07h.
The result of actual CRC-16 calculation is calculated including the data on and after the third byte.

Description	Result	Overflow digit
Default value in CRC register FFFFh	1111 1111 1111 1111	–
First byte 02h	0000 0000 0000 0010	–
XOR with default value FFFFh	1111 1111 1111 1101	–
First shift to right	0111 1111 1111 1110	1
XOR with A001h	1010 0000 0000 0001 1101 1111 1111 1111	–
Second shift to right	0110 1111 1111 1111	1
XOR with A001h	1010 0000 0000 0001 1100 1111 1111 1110	–
Third shift to right	0110 0111 1111 1111	0
Fourth shift to right	0011 0011 1111 1111	1
XOR with A001h	1010 0000 0000 0001 1001 0011 1111 1110	–
Fifth shift to right	0100 1001 1111 1111	0
Sixth shift to right	0010 0100 1111 1111	1
XOR with A001h	1010 0000 0000 0001 1000 0100 1111 1110	–
Seventh shift to right	0100 0010 0111 1111	0
Eighth shift to right	0010 0001 0011 1111	1
XOR with A001h	1010 0000 0000 0001 1000 0001 0011 1110	–
XOR with next byte 07h	0000 0000 0000 0111 1000 0001 0011 1001	–
First shift to right	0100 0000 1001 1100	1
XOR with A001h	1010 0000 0000 0001 1110 0000 1001 1101	–
Second shift to right	0111 0000 0100 1110	1
XOR with A001h	1010 0000 0000 0001 1101 0000 0100 1111	–
Third shift to right	0110 1000 0010 0111	1
XOR with A001h	1010 0000 0000 0001 1100 1000 0010 0110	–
Fourth shift to right	0110 0100 0001 0011	0
Fifth shift to right	0011 0010 0000 1001	1
XOR with A001h	1010 0000 0000 0001 1001 0010 0000 1000	–
Sixth shift to right	0100 1001 0000 0100	0
Seventh shift to right	0010 0100 1000 0010	0
Eighth shift to right	0001 0010 0100 0001	0
Result of CRC-16	0001 0010 0100 0001	–

6-2 Response

Slave-returned responses are classified into three types: normal response, no response, and exception response. The response message structure is the same as the query message structure.

Slave address	Function code	Data	Error check
8 bits	8 bits	N×8 bits	16 bits

■ Normal response

Upon receiving a query from the master, the slave executes the requested process and returns a response corresponding th the function code.

■ No response

The slave may not return a response to a query sent by the master. This condition is referred to as "No response." The causes of no response are explained below.

- **Transmission error**

The slave discards the query and does not return a response if any of the following transmission errors is detected.

Cause of transmission error	Description
Framing error	Stop bit 0 was detected.
Parity error	A mismatch with the specified parity was detected.
Mismatched CRC	The calculated value of CRC-16 was found not matching the error check value.
Invalid message length	The message length exceeded 256 bytes.

- **Other than transmission error**

A response may not be returned without any transmission error being detected.

Cause	Description
Broadcast	If the query was broadcast, the slave executes the requested process but does not return a response.
Mismatched slave address	The slave address in the query was found not matching the slave address of the driver.

■ Exception response

An exception response is returned if the slave cannot execute the process requested by the query. Appended to this response is an exception code indicating why the process cannot be executed. The message structure of exception response is as follows.

Slave address	Function code	Exception code	Error check
8 bits	8 bits	8 bits	16 bits

- **Function code**

The function code in the exception response is a sum of the function code in the query and 80h.

Function code of query	Exception response
03h	83h
06h	86h
08h	88h
10h	90h

- **Example of exception response**

Master

Slave address		01h
Function code		10h
Data	Register address (upper)	02h
	Register address (lower)	42h
	Number of registers (upper)	00h
	Number of registers (lower)	02h
	Number of data bytes	04h
	Value written to register address (upper)	00h
	Value written to register address (lower)	00h
	Value written to register address+1 (upper)	03h
	Value written to register address+1 (lower)	20h
Error check (lower)		6Eh
Error check (upper)		0Eh

Query →
← Response

Slave

Slave address		01h
Function code		90h
Data	Exception code	04h
Error check (lower)		4Dh
Error check (upper)		C3h

- **Exception code**

This code indicates why the process cannot be executed.

Exception code	Communication error code	Cause	Description
01h	88h	Invalid function	The process could not be executed because the function code was invalid. • The function code is not supported. • The sub-function code for diagnosis (08h) is other than 00h.
02h		Invalid data address	The process could not be executed because the data address was invalid. • The address is not supported (other than 0000h to 1FFFh). • Register address and number of registers are 2000h or more in total.
03h	8Ch	Invalid data	The process could not be executed because the data was invalid. • The number of registers is 0 or more than 17. • The number of bytes is other than twice the number of registers. • The data length is outside the specified range.
04h	89h 8Ah 8Ch 8Dh	Slave error	The process could not be executed because an error occurred at the slave. • User I/F communication in progress (89h) · Downloading or initialization is in progress using the **MEXE02** · Downloading, initializing or teaching function is in progress using the **OPX-2A** • Non-volatile memory processing in progress (8Ah) · Internal processing is in progress. (S-BSY is ON.) · An EEPROM error alarm is present. • Outside the parameter setting range (8Ch) The value write is outside the setting range. • Command execute disable (8Dh)

7 Function code

This chapter explains the function codes supported by the **AR** Series drivers.
Note that the function code cannot be executed if function codes other than those introduced here are sent.

7-1 Reading from a holding register(s) (03h)

This function code is used to read a register (16 bits). Up to 16 successive registers (16×16 bits) can be read.
Read the upper and lower data at the same time. If they are not read at the same time, the value may be invalid.
If multiple holding registers are read, they are read in order of register addresses.

■ Example of read

Read operation data for positions Nos.1 and 2 of slave address 1.

Description	Register address	Value read	Corresponding decimal
Operation data position No.1 (upper)	0402h	0000h	10000
Operation data position No.1 (lower)	0403h	2710h	
Operation data position No.2 (upper)	0404h	FFFFh	–10000
Operation data position No.2 (lower)	0405h	D8F0h	

- **Query**

Field name		Data	Description
Slave address		01h	Slave address1
Function code		03h	Reading from holding registers
Data	Register address (upper)	04h	Register address to start reading from
	Register address (lower)	02h	
	Number of registers (upper)	00h	Number of registers to be read from the starting register address (4 registers=0004h)
	Number of registers (lower)	04h	
Error check (lower)		E4h	Calculation result of CRC-16
Error check (upper)		F9h	

- **Response**

Field name		Data	Description
Slave address		01h	Same as query
Function code		03h	Same as query
Data	Number of data bytes	08h	Twice the number of registers in the query
	Value read from register address (upper)	00h	Value read from register address 0402h
	Value read from register address (lower)	00h	
	Value read from register address+1 (upper)	27h	Value read from register address 0403h
	Value read from register address+1 (lower)	10h	
	Value read from register address+2 (upper)	FFh	Value read from register address 0404h
	Value read from register address+2 (lower)	FFh	
	Value read from register address+3 (upper)	D8h	Value read from register address 0405h
	Value read from register address+3 (lower)	F0h	
Error check (lower)		08h	Calculation result of CRC-16
Error check (upper)		A3h	

7-2 Writing to a holding register (06h)

This function code is used to write data to a specified register address.
However, since the result combining the upper and lower may be outside the data range, write the upper and lower at the same time using the "Writing to multiple holding registers (10h)."

■ Example of write

Write 80 (50h) as speed filter to slave address 2.

Description	Register address	Value written	Corresponding decimal
Speed filter	024Bh	50h	80

- **Query**

Field name		Data	Description
Slave address		02h	Slave address 2
Function code		06h	Writing to a holding register
Data	Register address (upper)	02h	Register address to be written
	Register address (lower)	4Bh	
	Value written (upper)	00h	Value written to the register address
	Value written (lower)	50h	
Error check (lower)		F8h	Calculation result of CRC-16
Error check (upper)		6Bh	

- **Response**

Field name		Data	Description
Slave address		02h	Same as query
Function code		06h	Same as query
Data	Register address (upper)	02h	Same as query
	Register address (lower)	4Bh	
	Value written (upper)	00h	Same as query
	Value written (lower)	50h	
Error check (lower)		F8h	Calculation result of CRC-16
Error check (upper)		6Bh	

7-3 Diagnosis (08h)

This function code is used to diagnose the communication between the master and slave. Arbitrary data is sent and the returned data is used to determine whether the communication is normal. 00h (reply to query) is the only sub-function supported by this function code.

■ Example of diagnosis

Send arbitrary data (1234h) to the slave.

- **Query**

Field name		Data	Description
Slave address		03h	Slave address 3
Function code		08h	Diagnosis
Data	Sub-function code (upper)	00h	Return the query data
	Sub-function code (lower)	00h	
	Data value (upper)	12h	Arbitrary data (1234h)
	Data value (lower)	34h	
Error check (lower)		ECh	Calculation result of CRC-16
Error check (upper)		9Eh	

- **Response**

Field name		Data	Description
Slave address		03h	Same as query
Function code		08h	Same as query
Data	Sub-function code (upper)	00h	Same as query
	Sub-function code (lower)	00h	
	Data value (upper)	12h	Same as query
	Data value (lower)	34h	
Error check (lower)		ECh	Same as query
Error check (upper)		9Eh	

7-4 Writing to multiple holding registers (10h)

This function code is used to write data to multiple successive registers. Up to 16 registers can be written.
Write the data to the upper and lower at the same time. If not, an invalid value may be written.
Registers are written in order of register addresses. Note that even when an exception response is returned because some data is invalid as being outside the specified range, etc., other data may have been written properly.

■ Example of write

Set the following data as acceleration Nos.2 to 4 as part of operation data at slave address 4.

Description	Register address	Value written	Corresponding decimal
Operation data acceleration No.2 (upper)	0604h	0000h	10000
Operation data acceleration No.2 (lower)	0605h	2710h	
Operation data acceleration No.3 (upper)	0606h	0000h	20000
Operation data acceleration No.3 (lower)	0607h	4E20h	
Operation data acceleration No.4 (upper)	0608h	0007h	500,000
Operation data acceleration No.4 (lower)	0609h	A120h	

● **Query**

Field name		Data	Description
Slave address		04h	Slave address 4
Function code		10h	Writing to multiple holding registers
Data	Register address (upper)	06h	Register address to start writing from
	Register address (lower)	04h	
	Number of registers (upper)	00h	Number of registers to be written from the starting register address (6 registers=0006h)
	Number of registers (lower)	06h	
	Number of data bytes	0Ch	Twice the number of registers in the command
	Value written to register address (upper)	00h	Value written to register address 0604h
	Value written to register address (lower)	00h	
	Value written to register address+1 (upper)	27h	Value written to register address 0605h
	Value written to register address+1 (lower)	10h	
	Value written to register address+2 (upper)	00h	Value written to register address 0606h
	Value written to register address+2 (lower)	00h	
	Value written to register address+3 (upper)	4Eh	Value written to register address 0607h
	Value written to register address+3 (lower)	20h	
	Value written to register address+4 (upper)	00h	Value written to register address 0608h
	Value written to register address+4 (lower)	07h	
	Value written to register address+5 (upper)	A1h	Value written to register address 0609h
	Value written to register address+5 (lower)	20h	
Error check (lower)		1Dh	Calculation result of CRC-16
Error check (upper)		A9h	

- **Response**

Field name		Data	Description
Slave address		04h	Same as query
Function code		10h	Same as query
Data	Register address (upper)	06h	Same as query
	Register address (lower)	04h	
	Number of registers (upper)	00h	Same as query
	Number of registers (lower)	06h	
Error check (lower)		01h	Calculation result of CRC-16
Error check (upper)		17h	

8 Register address list

All data used by the driver is 32-bit wide. Since the register for the Modbus protocol is 16-bit wide, one data is described by two registers.
Since the address assignment is big endian, the even number addresses become the upper and the odd number addresses become the lower.

8-1 Operation commands

Commands related to motor operation. Operation commands are not saved in the non-volatile memory.

Register address		Name	Description	READ/ WRITE	Setting range
Dec	Hex				
48	0030h	Group (upper)	Sets the address number for the group send.	R/W	–1: No group specification (Group send is not performed) 1 to 31: Sets a group address (Address number of parent slave).
49	0031h	Group (lower)			
124	007Ch	Driver input command (upper)	Sets the input command to the driver.	R/W	Refer to p.229
125	007Dh	Driver input command (lower)			
126	007Eh	Driver output command (upper)	Reads the output status of the driver.	R	Refer to p.229
127	007Fh	Driver output command (lower)			

■ Group (0030h/0031h)

Multiple slaves are made into a group and a query is sent to all slaves in the group at once. See p.246 for group details.
The initial value is –1. When setting a group, read/write to the upper and lower at the same time.

Address (Hex)	Description of address *							
0030h	bit15	bit14	bit13	bit12	bit11	bit10	bit9	bit8
	[FFFFh]							
	bit7	bit6	bit5	bit4	bit3	bit2	bit1	bit0
	[FFFFh]							

* [ ]: Initial value

Address (Hex)	Description of address *							
0031h	bit15	bit14	bit13	bit12	bit11	bit10	bit9	bit8
	1 to 31: Sets a group address. [FFFFh]							
	bit7	bit6	bit5	bit4	bit3	bit2	bit1	bit0
	1 to 31: Sets a group address. [FFFFh]							

* [ ]: Initial value

■ Driver input command (007Ch/007Dh)

These are the driver input signals that can be accessed via RS-485 communication. See p.94 for each input signal.

Address (Hex)	Description of address							
007Ch	bit15	bit14	bit13	bit12	bit11	bit10	bit9	bit8
	–	–	–	–	–	–	–	–
	bit7	bit6	bit5	bit4	bit3	bit2	bit1	bit0
	–	–	–	–	–	–	–	–

Address (Hex)	Description of address *							
007Dh	bit15	bit14	bit13	bit12	bit11	bit10	bit9	bit8
	NET-IN15 [RVS]	NET-IN14 [FWD]	NET-IN13 [–JOG]	NET-IN12 [+JOG]	NET-IN11 [SSTART]	NET-IN10 [MS2]	NET-IN9 [MS1]	NET-IN8 [MS0]
	bit7	bit6	bit5	bit4	bit3	bit2	bit1	bit0
	NET-IN7 [not used]	NET-IN6 [FREE]	NET-IN5 [STOP]	NET-IN4 [HOME]	NET-IN3 [START]	NET-IN2 [M2]	NET-IN1 [M1]	NET-IN0 [M0]

* [ ]: Initial value

■ Driver output command (007Eh/007Fh)

These are the driver output signals that can be received via RS-485 communication. See p.100 for each output signal.

Address (Hex)	Description of address							
007Eh	bit15	bit14	bit13	bit12	bit11	bit10	bit9	bit8
	–	–	–	–	–	–	–	–
	bit7	bit6	bit5	bit4	bit3	bit2	bit1	bit0
	–	–	–	–	–	–	–	–

Address (Hex)	Description of address *							
007Fh	bit15	bit14	bit13	bit12	bit11	bit10	bit9	bit8
	NET-OUT15 [TLC]	NET-OUT14 [END]	NET-OUT13 [MOVE]	NET-OUT12 [TIM]	NET-OUT11 [AREA3]	NET-OUT10 [AREA2]	NET-OUT9 [AREA1]	NET-OUT8 [S-BSY]
	bit7	bit6	bit5	bit4	bit3	bit2	bit1	bit0
	NET-OUT7 [ALM]	NET-OUT6 [WNG]	NET-OUT5 [READY]	NET-OUT4 [HOME-P]	NET-OUT3 [START_R]	NET-OUT2 [M2_R]	NET-OUT1 [M1_R]	NET-OUT0 [M0_R]

* [ ]: Initial value

8-2 Maintenance commands

These commands are used to reset alarms and warnings. They are also used to execute the batch processing for the non-volatile memory. All commands can be written (WRITE). Executes when writing from 0 to 1.

Register address		Name	Description	Setting range
Dec	Hex			
384	0180h	Reset alarm (upper)	Resets the alarms that are present. Some alarms cannot be reset with the "reset alarm."	0, 1
385	0181h	Reset alarm (lower)		
386	0182h	Absolute position error alarm reset (upper)	Resets the absolute position error alarm.	
387	0183h	Absolute position error alarm reset (lower)		
388	0184h	Clear alarm records (upper)	Clears alarm records.	
389	0185h	Clear alarm records (lower)		
390	0186h	Clear warning records (upper)	Clears warning records.	
391	0187h	Clear warning records (lower)		
392	0188h	Clear communication error records (upper)	Clears the communication error records.	
393	0189h	Clear communication error records (lower)		
394	018Ah	P-PRESET execute (upper)	Presets the command position.	
395	018Bh	P-PRESET execute (lower)		
396	018Ch	Configuration (upper)	Executes the parameter recalculation and the setup.	
397	018Dh	Configuration (lower)		
398	018Eh	All data initialization (upper) *	Resets the operation data and parameters saved in the non-volatile memory, to their defaults.	
399	018Fh	All data initialization (lower) *		
400	0190h	Batch non-volatile memory read (upper)	Reads the parameters saved in the non-volatile memory, to the RAM. All operation data and parameters previously saved in the RAM are overwritten.	
401	0191h	Batch non-volatile memory read (lower)		
402	0192h	Batch non-volatile memory write (upper)	Writes the parameters saved in the RAM to the non-volatile memory. The non-volatile memory can be rewritten approximately 100,000 times.	
403	0193h	Batch non-volatile memory write (lower)		

* Communication parity, communication stop bit and transmission waiting time are not initialized. Initialize them using the **MEXE02** or **OPX-2A**.

■ Configuration (018Ch/018Dh)

Configuration will be executed when all of the following conditions are satisfied:

- An alarm is not present.
- The motor is not operated.
- The **MEXE02** is in other status than downloading, I/O test, test operation or teaching function.
- The **OPX-2A** is in other modes than the test mode or copy mode.

Shows the driver status before and after executing the configuration.

Item	Configuration is ready to execute	Configuration is executing	Configuration is completed
AC power input: PWR LED DC power input: POWER LED	Lit	Lit	Based on the driver condition.
AC power input: ALM LED DC power input: ALARM LED	OFF	OFF	
Electromagnetic brake	Hold/Release	Hold	
Motor excitation	Excitation/no excitation	No excitation	
Output signals	Allowed	Indeterminable	Allowed
Input signals		Not allowed	
Sensor inputs			

memo

- The correct monitor value may not return even when the monitor is executed while executing the configuration.
- If the "automatic return action" parameter is "enable" while meeting the conditions performing the automatic return operation, the automatic return operation will not perform immediately after executing the configuration.

8-3 Monitor commands

These commands are used to monitor the command position, command speed, alarm and warning records, etc. All commands can be read (READ).

Register address		Name	Description	Setting range
Dec	Hex			
128	0080h	Present alarm (upper)	Monitors the present alarm code.	00h to FFh
129	0081h	Present alarm (lower)		
130	0082h	Alarm record 1 (upper)	Monitors the alarm records.	
131	0083h	Alarm record 1 (lower)		
132	0084h	Alarm record 2 (upper)		
133	0085h	Alarm record 2 (lower)		
134	0086h	Alarm record 3 (upper)		
135	0087h	Alarm record 3 (lower)		
136	0088h	Alarm record 4 (upper)		
137	0089h	Alarm record 4 (lower)		
138	008Ah	Alarm record 5 (upper)		
139	008Bh	Alarm record 5 (lower)		
140	008Ch	Alarm record 6 (upper)		
141	008Dh	Alarm record 6 (lower)		
142	008Eh	Alarm record 7 (upper)		
143	008Fh	Alarm record 7 (lower)		
144	0090h	Alarm record 8 (upper)		
145	0091h	Alarm record 8 (lower)		
146	0092h	Alarm record 9 (upper)		
147	0093h	Alarm record 9 (lower)		

Register address		Name	Description	Setting range
Dec	Hex			
148	0094h	Alarm record 10 (upper)	Monitors the alarm records.	00h to FFh
149	0095h	Alarm record 10 (lower)		
150	0096h	Present warning (upper)	Monitors the present warning code.	
151	0097h	Present warning (lower)		
152	0098h	Warning record 1 (upper)	Monitors the warning records.	
153	0099h	Warning record 1 (lower)		
154	009Ah	Warning record 2 (upper)		
155	009Bh	Warning record 2 (lower)		
156	009Ch	Warning record 3 (upper)		
157	009Dh	Warning record 3 (lower)		
158	009Eh	Warning record 4 (upper)		
159	009Fh	Warning record 4 (lower)		
160	00A0h	Warning record 5 (upper)		
161	00A1h	Warning record 5 (lower)		
162	00A2h	Warning record 6 (upper)		
163	00A3h	Warning record 6 (lower)		
164	00A4h	Warning record 7 (upper)		
165	00A5h	Warning record 7 (lower)		
166	00A6h	Warning record 8 (upper)		
167	00A7h	Warning record 8 (lower)		
168	00A8h	Warning record 9 (upper)		
169	00A9h	Warning record 9 (lower)		
170	00AAh	Warning record 10 (upper)		
171	00ABh	Warning record 10 (lower)		
172	00ACh	Communication error code (upper)	Monitors the last received communication error code.	
173	00ADh	Communication error code (lower)		
174	00AEh	Communication error code record 1 (upper)	Monitors the communication error records that have occurred in the past.	
175	00AFh	Communication error code record 1 (lower)		
176	00B0h	Communication error code record 2 (upper)		
177	00B1h	Communication error code record 2 (lower)		
178	00B2h	Communication error code record 3 (upper)		
179	00B3h	Communication error code record 3 (lower)		
180	00B4h	Communication error code record 4 (upper)		
181	00B5h	Communication error code record 4 (lower)		
182	00B6h	Communication error code record 5 (upper)		
183	00B7h	Communication error code record 5 (lower)		

Register address		Name	Description	Setting range
Dec	Hex			
184	00B8h	Communication error code record 6 (upper)	Monitors the communication error records that have occurred in the past.	00h to FFh
185	00B9h	Communication error code record 6 (lower)		
186	00BAh	Communication error code record 7 (upper)		
187	00BBh	Communication error code record 7 (lower)		
188	00BCh	Communication error code record 8 (upper)		
189	00BDh	Communication error code record 8 (lower)		
190	00BEh	Communication error code record 9 (upper)		
191	00BFh	Communication error code record 9 (lower)		
192	00C0h	Communication error code record 10 (upper)		
193	00C1h	Communication error code record 10 (lower)		
194	00C2h	Present selected data No. (upper)	Monitors the operation data No. currently selected.	0 to 63
195	00C3h	Present selected data No. (lower)		
196	00C4h	Present operation data No. (upper)	Monitors the operation data No. corresponding to the data used in the current positioning operation. This address is used in linked-motion operation and sequential positioning operation. While the motor is stopped, the last used operation data number is indicated. "−1" is indicated until the positioning operation is performed after turning the power on.	−1 to 63
197	00C5h	Present operation data No. (lower)		
198	00C6h	Command position (upper)	Monitors the command position.	−2,147,483,648 to 2,147,483,647 step
199	00C7h	Command position (lower)		
200	00C8h	Command speed (upper)	Monitors the current command speed.	−4500 to +4500 r/min +: Forward −: Reverse 0: Stop
201	00C9h	Command speed (lower)		
204	00CCh	Actual position (upper)	Monitors the actual position. Shows the value that applied the data having set with the electronic gear.	−2,147,483,648 to 2,147,483,647 step
205	00CDh	Actual position (lower)		
206	00CEh	Actual speed (upper)	Monitors the actual speed.	−4500 to +4500 r/min
207	00CFh	Actual speed (lower)		
210	00D2h	Remaining dwell time (upper)	Monitors how much of the dwell time used in the linked-motion 2 operation remains.	0 to 50000 ms
211	00D3h	Remaining dwell time (lower)		
212	00D4h	Direct I/O and electromagnetic brake status (upper)	Monitors the each direct I/O signal and electromagnetic brake status.	See next table.
213	00D5h	Direct I/O and electromagnetic brake status (lower)		

■ Direct I/O and electromagnetic brake status (00D4h/00D5h)

Address (Hex)		bit7	bit6	bit5	bit4	bit3	bit2	bit1	bit0
00D4h	Upper	–	–	–	–	–	–	–	MB
	Lower	–	–	OUT5	OUT4	OUT3	OUT2	OUT1	OUT0
00D5h	Upper	–	–	IN7	IN6	IN5	IN4	IN3	IN2
	Lower	IN1	IN0	–	–	SLIT	HOMES	–LS	+LS

8-4 Parameter R/W commands

Write or read parameters. All commands can be read and written (READ/WRITE). For details on parameters, see p.112.

■ Operation data

If the data is changed, a recalculation and setup will be performed after the operation is stopped.

Register address		Name	Setting range	Initial value
Dec	Hex			
1024 1025 to 1150 1151	0400h 0401h to 047Eh 047Fh	Position No.0 (upper) Position No.0 (lower) to Position No.63 (upper) Position No.63 (lower)	–8,388,608 to 8,388,607 step	0
1152 1153 to 1278 1279	0480h 0481h to 04FEh 04FFh	Operating speed No.0 (upper) Operating speed No.0 (lower) to Operating speed No.63 (upper) Operating speed No.63 (lower)	0 to 1,000,000 Hz	1000
1280 1281 to 1406 1407	0500h 0501h to 057Eh 057Fh	Operation mode No.0 (upper) Operation mode No.0 (lower) to Operation mode No.63 (upper) Operation mode No.63 (lower)	0: Incremental 1: Absolute	0
1408 1409 to 1534 1535	0580h 0581h to 05FEh 05FFh	Operation function No.0 (upper) Operation function No.0 (lower) to Operation function No.63 (upper) Operation function No.63 (lower)	0: Single-motion 1: Linked-motion 2: Linked-motion 2 3: Push	0
1536 1537 to 1662 1663	0600h 0601h to 067Eh 067Fh	Acceleration No.0 (upper) Acceleration No.0 (lower) to Acceleration No.63 (upper) Acceleration No.63 (lower)	1 to 1,000,000 (1=0.001 ms/kHz or 1=0.001 s) *1 *2	1000
1664 1665 to 1790 1791	0680h 0681h to 06FEh 06FFh	Deceleration No.0 (upper) Deceleration No.0 (lower) to Deceleration No.63 (upper) Deceleration No.63 (lower)	1 to 1,000,000 (1=0.001 ms/kHz or 1=0.001 s) *1 *2	1000
1792 1793 to 1918 1919	0700h 0701h to 077Eh 077Fh	Push current No.0 (upper) Push current No.0 (lower) to Push current No.63 (upper) Push current No.63 (lower)	0 to 1000 (1=0.1%) *3	200
1920 1921 to 2046 2047	0780h 0781h to 07FEh 07FFh	Sequential positioning No.0 (upper) Sequential positioning No.0 (lower) to Sequential positioning No.63 (upper) Sequential positioning No.63 (lower)	0: Disable 1: Enable	0

Register address		Name	Setting range	Initial value
Dec	Hex			
2048 2049 to 2174 2175	0800h 0801h to 087Eh 087Fh	Dwell time No.0 (upper) Dwell time No.0 (lower) to Dwell time No.63 (upper) Dwell time No.63 (lower)	0 to 50000 (1=0.001 s)	0

*1 This item is effective when the "acceleration/deceleration type" parameter is set to "separate." If this parameter is set to "common," the values of the "common acceleration" and "common deceleration" parameters will be used (initial value: separate).
*2 Acceleration/deceleration rate (ms/kHz) or acceleration/deceleration time (s) can be selected using "acceleration/deceleration unit" parameter. (initial value: acceleration/deceleration rate).
*3 For the driver which is before the specification change, the setting range is 0 to 500 (1=0.1%). Refer to p.7 for details.

■ User parameters

When a parameter is changed, the timing to enable the new value varies depending on the parameter. See the following three types.

Update timing		Description
A	Immediately	Executes the recalculation and setup immediately when writing the parameter.
B	After stopping the operation	Executes the recalculation and setup after stopping the operation.
C	After executing the configuration or after cycling the power	Executes the recalculation and setup after executing the configuration or turning the DC power ON again.

In this chapter, each update timing is represented in A to C.

Register address		Name	Setting range	Initial value	Effective (p.235)
Dec	Hex				
512	0200h	STOP input action (upper)	0: Immediate stop 1: Deceleration stop 2: Immediate stop & Current OFF 3: Deceleration stop & Current OFF	1	A
513	0201h	STOP input action (lower)			
514	0202h	Hardware overtravel (upper)	0: Disable 1: Enable	1	
515	0203h	Hardware overtravel (lower)			
516	0204h	Overtravel action (upper)	0: Immediate stop 1: Deceleration stop	0	
517	0205h	Overtravel action (lower)			
518	0206h	END signal range (upper)	0 to 180 (1=0.1°)	18	
519	0207h	END signal range (lower)			
520	0208h	Positioning complete output offset (upper)	−18 to 18 (1=0.1°)	0	
521	0209h	Positioning complete output offset (lower)			
522	020Ah	AREA1 positive direction position (upper)	−8,388,608 to 8,388,607 step	0	
523	020Bh	AREA1 positive direction position (lower)			
524	020Ch	AREA1 negative direction position (upper)			
525	020Dh	AREA1 negative direction position (lower)			

Register address		Name	Setting range	Initial value	Effective (p.235)
Dec	Hex				
526	020Eh	AREA2 positive direction position (upper)	–8,388,608 to 8,388,607 step	0	A
527	020Fh	AREA2 positive direction position (lower)			
528	0210h	AREA2 negative direction position (upper)			
529	0211h	AREA2 negative direction position (lower)			
530	0212h	AREA3 positive direction position (upper)			
531	0213h	AREA3 positive direction position (lower)			
532	0214h	AREA3 negative direction position (upper)			
533	0215h	AREA3 negative direction position (lower)			
534	0216h	Minimum ON time for MOVE output (upper)	0 to 255 ms	0	
535	0217h	Minimum ON time for MOVE output (lower)			
536	0218h	LS contact configration (upper)	0: Make (N.O.) 1: Brake (N.C.)	0	C
537	0219h	LS contact configration (lower)			
538	021Ah	HOMES logic level (upper)			
539	021Bh	HOMES logic level (lower)			
540	021Ch	SLIT logic level (upper)			
541	021Dh	SLIT logic level (lower)			
576	0240h	RUN current (upper)	0 to 1000 (1=0.1%)	1000	A
577	0241h	RUN current (lower)			
578	0242h	STOP current (upper)	0 to 500 (1=0.1%)	500	
579	0243h	STOP current (lower)			
580	0244h	Position loop gain (upper)	1 to 50	10	A
581	0245h	Position loop gain (lower)			
582	0246h	Speed loop gain (upper)	10 to 200	180	
583	0247h	Speed loop gain (lower)			
584	0248h	Speed loop integral time constant (upper)	100 to 2000 (1=0.1 ms)	1000	
585	0249h	Speed loop integral time constant (lower)			
586	024Ah	Speed filter (upper)	0 to 200 ms	1	B
587	024Bh	Speed filter (lower)			
588	024Ch	Moving average time (upper)	1 to 200 ms	1	
589	024Dh	Moving average time (lower)			
640	0280h	Common acceleration (upper)	1 to 1,000,000 (1=0.001 ms/kHz or 1=0.001 s) *	1000	
641	0281h	Common acceleration (lower)			
642	0282h	Common deceleration (upper)	1 to 1,000,000 (1=0.001 ms/kHz or 1=0.001 s) *	1000	
643	0283h	Common deceleration (lower)			
644	0284h	Starting speed (upper)	0 to 1,000,000 Hz	500	
645	0285h	Starting speed (lower)			
646	0286h	JOG operating speed (upper)	1 to 1,000,000 Hz	1000	
647	0287h	JOG operating speed (lower)			

Register address		Name	Setting range	Initial value	Effective (p.235)
Dec	Hex				
648	0288h	Acceleration/deceleration rate of JOG (upper)	1 to 1,000,000 (1=0.001 ms/kHz or 1=0.001 s) *	1000	B
649	0289h	Acceleration/deceleration rate of JOG (lower)			
650	028Ah	JOG starting speed (upper)	0 to 1,000,000 Hz	500	
651	028Bh	JOG starting speed (lower)			
652	028Ch	Acceleration/deceleration type (upper)	0: Common 1: Separate	1	
653	028Dh	Acceleration/deceleration type (lower)			
654	028Eh	Acceleration/deceleration unit (upper)	0: ms/kHz 1: s	0	C
655	028Fh	Acceleration/deceleration unit (lower)			
704	02C0h	Home-seeking mode (upper)	0: 2-sensor mode 1: 3-sensor mode 2: Push mode	1	B
705	02C1h	Home-seeking mode (lower)			
706	02C2h	Operating speed of home-seeking (upper)	1 to 1,000,000 Hz	1000	
707	02C3h	Operating speed of home-seeking (lower)			
708	02C4h	Acceleration/deceleration of home-seeking (upper)	1 to 1,000,000 (1=0.001 ms/kHz or1=0.001 s)*	1000	
709	02C5h	Acceleration/deceleration of home-seeking (lower)			
710	02C6h	Starting speed of home-seeking (upper)	1 to 1,000,000 Hz	500	
711	02C7h	Starting speed of home-seeking (lower)			
712	02C8h	Position offset of home-seeking (upper)	–8,388,608 to 8,388,607 step	0	
713	02C9h	Position offset of home-seeking (lower)			
714	02CAh	Starting direction of home-seeking (upper)	0: Negative direction 1: Positive direction	1	
715	02CBh	Starting direction of home-seeking (lower)			
716	02CCh	SLIT detection with home-seeking (upper)	0: Disable 1: Enable	0	
717	02CDh	SLIT detection with home-seeking (lower)			
718	02CEh	TIM signal detection with home-seeking (upper)	0: Disable 1: Enable	0	
719	02CFh	TIM signal detection with home-seeking (lower)			
720	02D0h	Operating current of home-seeking with push-motion (upper)	0 to 1000 (1=0.1%)	1000	
721	02D1h	Operating current of home-seeking with push-motion (lower)			
768	0300h	Overload alarm (upper)	1 to 300 (1=0.1 s)	50	A
769	0301h	Overload alarm (lower)			

Register address		Name	Setting range	Initial value	Effective (p.235)
Dec	Hex				
770	0302h	Excessive position deviation alarm at current ON (upper)	1 to 30000 (1=0.01 rev)	300	A
771	0303h	Excessive position deviation alarm at current ON (lower)			
776	0308h	Return-to-home incomplete alarm (upper)	0: Disable 1: Enable	0	C
777	0309h	Return-to-home incomplete alarm (lower)			
832	0340h	Overheat warning (upper)	40 to 85 °C	85	A
833	0341h	Overheat warning (lower)			
834	0342h	Overload warning (upper)	1 to 300 (1=0.1 s)	50	
835	0343h	Overload warning (lower)			
836	0344h	Overspeed warning (upper)	1 to 5000 r/min	4500	
837	0345h	Overspeed warning (lower)			
838	0346h	Overvoltage warning (upper)	• AC power input: 120 to 450 V • DC power input: 150 to 630 (1=0.1 V)	AC power input: 435 DC power input: 630	
839	0347h	Overvoltage warning (lower)			
840	0348h	Undervoltage warning (upper)	• AC power input: 120 to 280 V • DC power input: 150 to 630 (1=0.1 V)	AC power input: 120 DC power input: 180	
841	0349h	Undervoltage warning (lower)			
842	034Ah	Excessive position deviation warning at current ON (upper)	1 to 30000 (1=0.01 rev)	300	
843	034Bh	Excessive position deviation warning at current ON (lower)			
896	0380h	Electronic gear A (upper)	1 to 65535	1	C
897	0381h	Electronic gear A (lower)			
898	0382h	Electronic gear B (upper)	1 to 65535	1	
899	0383h	Electronic gear B (lower)			
900	0384h	Motor rotation direction (upper)	0: Positive direction=CCW 1: Positive direction=CW	1	
901	0385h	Motor rotation direction (lower)			
902	0386h	Software overtravel (upper)	0: Disable 1: Enable	1	A
903	0387h	Software overtravel (lower)			
904	0388h	Positive software limit (upper)	–8,388,608 to 8,388,607 step	8,388,607	
905	0389h	Positive software limit (lower)			
906	038Ah	Negative software limit (upper)	–8,388,608 to 8,388,607 step	–8,388,608	
907	038Bh	Negative software limit (lower)			
908	038Ch	Preset position (upper)	–8,388,608 to 8,388,607 step	0	
909	038Dh	Preset position (lower)			
910	038Eh	Wrap setting (upper)	0: Disable 1: Enable	0	C
911	038Fh	Wrap setting (lower)			
912	0390h	Wrap setting range (upper)	1 to 8,388,607 step	1000	
913	0391h	Wrap setting range (lower)			
960	03C0h	Data setter speed display (upper)	0: Signed 1: Absolute value	0	A
961	03C1h	Data setter speed display (lower)			
962	03C2h	Data setter edit (upper)	0: Disable 1: Enable	1	
963	03C3h	Data setter edit (lower)			
964	03C4h	Absolute back-up system (upper)	0: Disable 1: Enable	0	C
965	03C5h	Absolute back-up system (lower)			

Register address		Name	Setting range	Initial value	Effective (p.235)
Dec	Hex				
4096	1000h	MS0 operation No. selection (upper)	0 to 63	0	B
4097	1001h	MS0 operation No. selection (lower)			
4098	1002h	MS1 operation No. selection (upper)		1	
4099	1003h	MS1 operation No. selection (lower)			
4100	1004h	MS2 operation No. selection (upper)		2	
4101	1005h	MS2 operation No. selection (lower)			
4102	1006h	MS3 operation No. selection (upper)		3	
4103	1007h	MS3 operation No. selection (lower)			
4104	1008h	MS4 operation No. selection (upper)		4	
4105	1009h	MS4 operation No. selection (lower)			
4106	100Ah	MS5 operation No. selection (upper)		5	
4107	100Bh	MS5 operation No. selection (lower)			
4108	100Ch	HOME-P output function selection (upper)	0: Home output 1: Return-to-home complete output	0	A
4109	100Dh	HOME-P output function selection (lower)			
4128	1020h	Filter selection (upper)	0: Speed filter 1: Moving average filter	0	C
4129	1021h	Filter selection (lower)			
4130	1022h	Speed difference gain 1 (upper)	0 to 500	45	A
4131	1023h	Speed difference gain 1 (lower)			
4132	1024h	Speed difference gain 2 (upper)	0 to 500	45	
4133	1025h	Speed difference gain 2 (lower)			
4134	1026h	Control mode (upper)	0: Normal mode 1: Current control mode	0	C
4135	1027h	Control mode (lower)			
4136	1028h	Smooth drive (upper)	0: Disable 1: Enable	1	
4137	1029h	Smooth drive (lower)			
4160	1040h	Automatic return operation (upper)	0: Disable 1: Enable	0	
4161	1041h	Automatic return operation (lower)			
4162	1042h	Operation speed of automatic return (upper)	1 to 1,000,000 Hz	1000	B
4163	1043h	Operation speed of automatic return (lower)			
4164	1044h	Acceleration (deceleration) of automatic return (upper)	1 to 1,000,000 (1=0.001 ms/kHz or 1=0.001 s) *	1000	
4165	1045h	Acceleration (deceleration) of automatic return (lower)			

Register address		Name	Setting range	Initial value	Effective (p.235)
Dec	Hex				
4166	1046h	Starting speed of automatic return (upper)	0 to 1,000,000 Hz	500	B
4167	1047h	Starting speed of automatic return (lower)			
4168	1048h	JOG travel amount (upper)	1 to 8,388,607 step	1	
4169	1049h	JOG travel amount (lower)			
4224	1080h	Excessive position deviation alarm at current OFF (upper)	1 to 30000 (1=0.01 rev)	10000	A
4225	1081h	Excessive position deviation alarm at current OFF (lower)			
4352	1100h	IN0 input function selection (upper)	Refer to table on p.244.	3: HOME	C
4353	1101h	IN0 input function selection (lower)			
4354	1102h	IN1 input function selection (upper)		4: START	
4355	1103h	IN1 input function selection (lower)			
4356	1104h	IN2 input function selection (upper)		48: M0	
4357	1105h	IN2 input function selection (lower)			
4358	1106h	IN3 input function selection (upper)		49: M1	
4359	1107h	IN3 input function selection (lower)			
4360	1108h	IN4 input function selection (upper)		50: M2	
4361	1109h	IN4 input function selection (lower)			
4362	110Ah	IN5 input function selection (upper)		16: FREE	
4363	110Bh	IN5 input function selection (lower)			
4364	110Ch	IN6 input function selection (upper)		18: STOP	
4365	110Dh	IN6 input function selection (lower)			
4366	110Eh	IN7 input function selection (upper)		24: ALM-RST	
4367	110Fh	IN7 input function selection (lower)			
4384	1120h	IN0 input logic level setting (upper)	0: Make (N.O.) 1: Brake (N.C.)	0	
4385	1121h	IN0 input logic level setting (lower)			
4386	1122h	IN1 input logic level setting (upper)			
4387	1123h	IN1 input logic level setting (lower)			
4388	1124h	IN2 input logic level setting (upper)			
4389	1125h	IN2 input logic level setting (lower)			

Register address		Name	Setting range	Initial value	Effective (p.235)
Dec	Hex				
4390	1126h	IN3 input logic level setting (upper)	0: Make (N.O.) 1: Brake (N.C.)	0	C
4391	1127h	IN3 input logic level setting (lower)			
4392	1128h	IN4 input logic level setting (upper)			
4393	1129h	IN4 input logic level setting (lower)			
4394	112Ah	IN5 input logic level setting (upper)			
4395	112Bh	IN5 input logic level setting (lower)			
4396	112Ch	IN6 input logic level setting (upper)			
4397	112Dh	IN6 input logic level setting (lower)			
4398	112Eh	IN7 input logic level setting (upper)			
4399	112Fh	IN7 input logic level setting (lower)			
4416	1140h	OUT0 output function selection (upper)	Refer to table on p.244.	70: HOME-P	
4417	1141h	OUT0 output function selection (lower)			
4418	1142h	OUT1 output function selection (upper)		69: END	
4419	1143h	OUT1 output function selection (lower)			
4420	1144h	OUT2 output function selection (upper)		73: AREA1	
4421	1145h	OUT2 output function selection (lower)			
4422	1146h	OUT3 output function selection (upper)		67: READY	
4423	1147h	OUT3 output function selection (lower)			
4424	1148h	OUT4 output function selection (upper)		66: WNG	
4425	1149h	OUT4 output function selection (lower)			
4426	114Ah	OUT5 output function selection (upper)		65: ALM	
4427	114Bh	OUT5 output function selection (lower)			
4448	1160h	NET-IN0 input function selection (upper)	Refer to table on p.245.	48: M0	
4449	1161h	NET-IN0 input function selection (lower)			
4450	1162h	NET-IN1 input function selection (upper)		49: M1	
4451	1163h	NET-IN1 input function selection (lower)			

Register address		Name	Setting range	Initial value	Effective (p.235)
Dec	Hex				
4452	1164h	NET-IN2 input function selection (upper)	Refer to table on p.245.	50: M2	C
4453	1165h	NET-IN2 input function selection (lower)			
4454	1166h	NET-IN3 input function selection (upper)		4: START	
4455	1167h	NET-IN3 input function selection (lower)			
4456	1168h	NET-IN4 input function selection (upper)		3: HOME	
4457	1169h	NET-IN4 input function selection (lower)			
4458	116Ah	NET-IN5 input function selection (upper)		18: STOP	
4459	116Bh	NET-IN5 input function selection (lower)			
4460	116Ch	NET-IN6 input function selection (upper)		16: FREE	
4461	116Dh	NET-IN6 input function selection (lower)			
4462	116Eh	NET-IN7 input function selection (upper)		0: No function	
4463	116Fh	NET-IN7 input function selection (lower)			
4464	1170h	NET-IN8 input function selection (upper)		8: MS0	
4465	1171h	NET-IN8 input function selection (lower)			
4466	1172h	NET-IN9 input function selection (upper)		9: MS1	
4467	1173h	NET-IN9 input function selection (lower)			
4468	1174h	NET-IN10 input function selection (upper)		10: MS2	
4469	1175h	NET-IN10 input function selection (lower)			
4470	1176h	NET-IN11 input function selection (upper)		5: SSTART	
4471	1177h	NET-IN11 input function selection (lower)			
4472	1178h	NET-IN12 input function selection (upper)		6: +JOG	
4473	1179h	NET-IN12 input function selection (lower)			
4474	117Ah	NET-IN13 input function selection (upper)		7: –JOG	
4475	117Bh	NET-IN13 input function selection (lower)			
4476	117Ch	NET-IN14 input function selection (upper)		1: FWD	
4477	117Dh	NET-IN14 input function selection (lower)			

Register address		Name	Setting range	Initial value	Effective (p.235)
Dec	Hex				
4478	117Eh	NET-IN15 input function selection (upper)	Refer to table on p.245.	2: RVS	C
4479	117Fh	NET-IN15 input function selection (lower)			
4480	1180h	NET-OUT0 output function selection (upper)	Refer to table on p.245.	48: M0_R	
4481	1181h	NET-OUT0 output function selection (lower)			
4482	1182h	NET-OUT1 output function selection (upper)		49: M1_R	
4483	1183h	NET-OUT1 output function selection (lower)			
4484	1184h	NET-OUT2 output function selection (upper)		50: M2_R	
4485	1185h	NET-OUT2 output function selection (lower)			
4486	1186h	NET-OUT3 output function selection (upper)		4: START_R	
4487	1187h	NET-OUT3 output function selection (lower)			
4488	1188h	NET-OUT4 output function selection (upper)		70: HOME-P	
4489	1189h	NET-OUT4 output function selection (lower)			
4490	118Ah	NET-OUT5 output function selection (upper)		67: READY	
4491	118Bh	NET-OUT5 output function selection (lower)			
4492	118Ch	NET-OUT6 output function selection (upper)		66: WNG	
4493	118Dh	NET-OUT6 output function selection (lower)			
4494	118Eh	NET-OUT7 output function selection (upper)		65: ALM	
4495	118Fh	NET-OUT7 output function selection (lower)			
4496	1190h	NET-OUT8 output function selection (upper)		80: S-BSY	
4497	1191h	NET-OUT8 output function selection (lower)			
4498	1192h	NET-OUT9 output function selection (upper)		73: AREA1	
4499	1193h	NET-OUT9 output function selection (lower)			
4500	1194h	NET-OUT10 output function selection (upper)		74: AREA2	
4501	1195h	NET-OUT10 output function selection (lower)			
4502	1196h	NET-OUT11 output function selection (upper)		75: AREA3	
4503	1197h	NET-OUT11 output function selection (lower)			

Register address		Name	Setting range	Initial value	Effective (p.235)
Dec	Hex				
4504	1198h	NET-OUT12 output function selection (upper)	Refer to table on p.245.	72: TIM	C
4505	1199h	NET-OUT12 output function selection (lower)			
4506	119Ah	NET-OUT13 output function selection (upper)		68: MOVE	
4507	119Bh	NET-OUT13 output function selection (lower)			
4508	119Ch	NET-OUT14 output function selection (upper)		69: END	
4509	119Dh	NET-OUT14 output function selection (lower)			
4510	119Eh	NET-OUT15 output function selection (upper)		71: TLC	
4511	119Fh	NET-OUT15 output function selection (lower)			
4608	1200h	Communication timeout (upper)	0: Not monitored 1 to 10000 ms	0	A
4609	1201h	Communication timeout (lower)			
4610	1202h	Communication error alarm (upper)	1 to 10 times	3	
4611	1203h	Communication error alarm (lower)			

* Acceleration/deceleration rate (ms/kHz) or acceleration/deceleration time (s) can be selected using "acceleration/deceleration unit" parameter. (initial value: acceleration/deceleration rate).

- **Setting range for IN input function selection**

0: No function	8: MS0	18: STOP	35: R3	43: R11	51: M3
1: FWD	9: MS1	24: ALM-RST	36: R4	44: R12	52: M4
2: RVS	10: MS2	25: P-PRESET	37: R5	45: R13	53: M5
3: HOME	11: MS3	26: P-CLR	38: R6	46: R14	
4: START	12: MS4	27: HMI	39: R7	47: R15	
5: SSTART	13: MS5	32: R0	40: R8	48: M0	
6: +JOG	16: FREE	33: R1	41: R9	49: M1	
7: –JOG	17: C-ON	34: R2	42: R10	50: M2	

- **Setting range for OUT output function selection**

0: No function	10: MS2_R	35: R3	45: R13	61: –LS_R	72: TIM
1: FWD_R	11: MS3_R	36: R4	46: R14	62: HOMES_R	73: AREA1
2: RVS_R	12: MS4_R	37: R5	47: R15	63: SLIT_R	74: AREA2
3: HOME_R	13: MS5_R	38: R6	48: M0_R	65: ALM	75: AREA3
4: START_R	16: FREE_R	39: R7	49: M1_R	66: WNG	80: S-BSY
5: SSTART_R	17: C-ON_R	40: R8	50: M2_R	67: READY	82: MPS *
6: +JOG_R	18: STOP_R	41: R9	51: M3_R	68: MOVE	
7: –JOG_R	32: R0	42: R10	52: M4_R	69: END	
8: MS0_R	33: R1	43: R11	53: M5_R	70: HOME-P	
9: MS1_R	34: R2	44: R12	60: +LS_R	71: TLC	

* AC power input only.

● **Setting range for NET-IN input function selection**

0: No function	8: MS0	18: STOP	35: R3	43: R11	51: M3
1: FWD	9: MS1	24: ALM-RST *	36: R4	44: R12	52: M4
2: RVS	10: MS2	25: P-PRESET *	37: R5	45: R13	53: M5
3: HOME	11: MS3	26: P-CLR *	38: R6	46: R14	
4: START	12: MS4	27: HMI	39: R7	47: R15	
5: SSTART	13: MS5	32: R0	40: R8	48: M0	
6: +JOG	16: FREE	33: R1	41: R9	49: M1	
7: –JOG	17: C-ON	34: R2	42: R10	50: M2	

* These three signals cannot be set in the driver which is before the specification change. Refer to p.7 for details.

● **Setting range for NET-OUT output function selection**

0: No function	10: MS2_R	35: R3	45: R13	61: –LS_R	72: TIM
1: FWD_R	11: MS3_R	36: R4	46: R14	62: HOMES_R	73: AREA1
2: RVS_R	12: MS4_R	37: R5	47: R15	63: SLIT_R	74: AREA2
3: HOME_R	13: MS5_R	38: R6	48: M0_R	65: ALM	75: AREA3
4: START_R	16: FREE_R	39: R7	49: M1_R	66: WNG	80: S-BSY
5: SSTART_R	17: C-ON_R	40: R8	50: M2_R	67: READY	82: MPS *
6: +JOG_R	18: STOP_R	41: R9	51: M3_R	68: MOVE	
7: –JOG_R	32: R0	42: R10	52: M4_R	69: END	
8: MS0_R	33: R1	43: R11	53: M5_R	70: HOME-P	
9: MS1_R	34: R2	44: R12	60: +LS_R	71: TLC	

* AC power input only.

9 Group send

Multiple slaves are made into a group and a query is sent to all slaves in the group at once.

■ Group composition

A group consists of one parent slave and child slaves and only the parent slave returns a response.

● Group address

To perform a group send, set a group address to the child slaves to be included in the group.
The child slaves to which the group address has been set can receive a query sent to the parent slave.

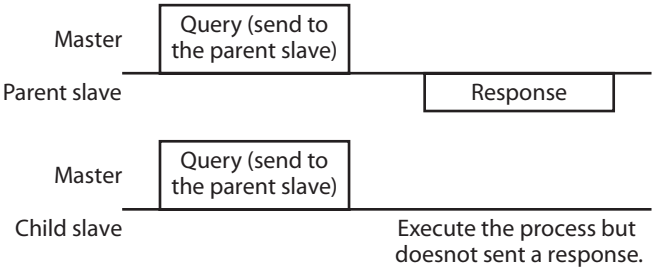

● Parent slave

No special setting is required on the parent slave to perform a group send. The address of the parent slave becomes the group address. When a query is sent to the parent slave from the master, the parent slave executes the requested process and then returns a response (same as with the unicast mode).

● Child slave

Use a "group" command to set a group address to each child slave. Change the group in the unicast mode.
When setting a group, read/write to the upper and lower at the same time.

Register address		Name	Description	READ/ WRITE	Setting range
Dec	Hex				
48	0030h	Group (upper)	Sets the group address.	R/W	–1: No group specification (Group send is not performed) 1 to 31: Group address (Address number of parent slave)
49	0031h	Group (lower)			

memo Since the group setting is not saved in the non-volatile memory even when the "batch NV memory write" executes, the group setting will be cleared when turning the driver power OFF.

■ Function code to execute in a group send

Function code	Function
10h	Writing to multiple holding registers

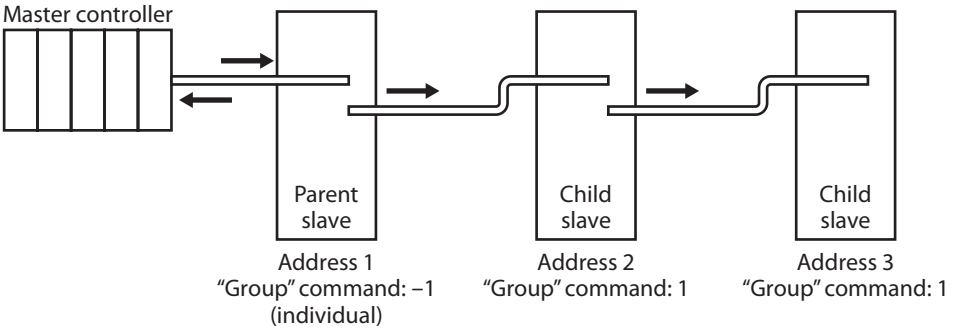

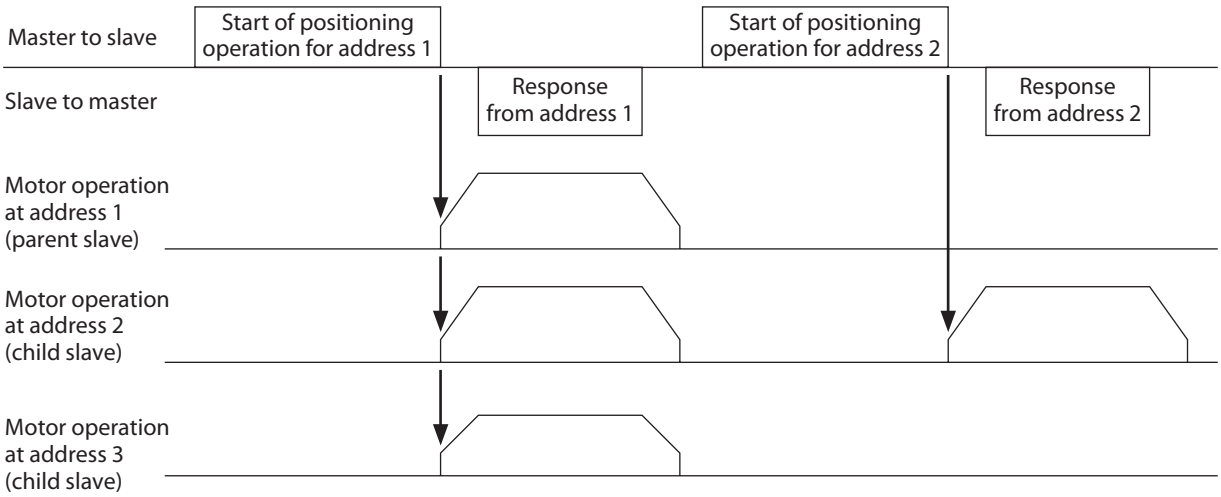
Master to slave
Start of positioning operation for address 1
Start of positioning operation for address 2
Slave to master
Response from address 1
Response from address 2
Motor operation at address 1 (parent slave)
Motor operation at address 2 (child slave)
Motor operation at address 3 (child slave)

10 Setting example of the operation

10-1 Positioning operation

As an example, here is a description how to execute the following positioning operation. For details of positioning operation, refer to p.168.
This section explains by using the function code "10h" for data writing and using the function code "06h" for remote I/O writing.

- **Setting example**
  - Address number (slave address): 1
  - Position (travel amount): 1000 step
  - Operating speed: 5000 Hz
- **Operation procedure**

1. Send the following query and set the position (travel amount) of the operation data No.0 to 1000 steps.

Query

Field name		Data	Description
Slave address		01h	Slave address1
Function code		10h	Writing to multiple holding registers
Data	Register address (upper)	04h	Register address to start writing from = Position No.0 (0400h)
	Register address (lower)	00h	
	Number of registers (upper)	00h	Number of registers to be written from the starting register address
	Number of registers (lower)	02h	
	Number of bytes	04h	Twice the number of registers in the query
	Value written to register address (upper)	00h	Value written to register address = 1000 step (0000 03E8h)
	Value written to register address (lower)	00h	
	Value written to register address +1 (upper)	03h	
	Value written to register address +1 (lower)	E8h	
Error check (lower)		C1h	Calculation result of CRC-16
Error check (upper)		D1h	

Response

Field name		Data	Description
Slave address		01h	Same as query
Function code		10h	
Data	Register address (upper)	04h	
	Register address (lower)	00h	
	Number of registers (upper)	00h	
	Number of registers (lower)	02h	
Error check (lower)		40h	Calculation result of CRC-16
Error check (upper)		F8h	

2. Send the following query and set the operating speed of the operation data No.0 to 5000 Hz.

Query

Field name		Data	Description
Slave address		01h	Slave address1
Function code		10h	Writing to multiple holding registers
Data	Register address (upper)	04h	Register address to start writing from = Operating speed No.0 (0480h)
	Register address (lower)	80h	
	Number of registers (upper)	00h	Number of registers to be written from the starting register address
	Number of registers (lower)	02h	
	Number of bytes	04h	Twice the number of registers in the query
	Value written to register address (upper)	00h	Value written to register address = 5000 Hz (0000 1388h)
	Value written to register address (lower)	00h	
	Value written to register address +1 (upper)	13h	
	Value written to register address +1 (lower)	88h	
Error check (lower)		C4h	Calculation result of CRC-16
Error check (upper)		59h	

Response

Field name		Data	Description
Slave address		01h	Same as query
Function code		10h	
Data	Register address (upper)	04h	
	Register address (lower)	80h	
	Number of registers (upper)	00h	
	Number of registers (lower)	02h	
Error check (lower)		41h	Calculation result of CRC-16
Error check (upper)		10h	

3. Send the following query and turn START ON.
   Positioning operation is started.

Query

Field name		Data	Description
Slave address		01h	Slave address1
Function code		06h	Writing to a holding register
Data	Register address (upper)	00h	Register address to which writing is executed = Driver input command (007Dh)
	Register address (lower)	7Dh	
	Value written (upper)	00h	Value written to register address = START ON (0008h)
	Value written (lower)	08h	
Error check (lower)		18h	Calculation result of CRC-16
Error check (upper)		14h	

Response

Field name		Data	Description
Slave address		01h	Same as query
Function code		06h	
Data	Register address (upper)	00h	
	Register address (lower)	7Dh	
	Value written (upper)	00h	
	Value written (lower)	08h	
Error check (lower)		18h	Calculation result of CRC-16
Error check (upper)		14h	

4. When positioning operation is started, send the following query and turn START OFF again.

Query

Field name		Data	Description
Slave address		01h	Slave address1
Function code		06h	Writing to a holding register
Data	Register address (upper)	00h	Register address to which writing is executed = Driver input command (007Dh)
	Register address (lower)	7Dh	
	Value written (upper)	00h	Value written to register address = START OFF (0000h)
	Value written (lower)	00h	
Error check (lower)		19h	Calculation result of CRC-16
Error check (upper)		D2h	

Response

Field name		Data	Description
Slave address		01h	Same as query
Function code		06h	
Data	Register address (upper)	00h	
	Register address (lower)	7Dh	
	Value written (upper)	00h	
	Value written (lower)	00h	
Error check (lower)		19h	Calculation result of CRC-16
Error check (upper)		D2h	

10-2 Continuous operation

As an example, here is a description how to execute the following continuous operation. For details of continuous operation, refer to p.190.
This section explains by using the function code "10h" for data writing and using the function code "06h" for remote I/O writing.

● Setting example

- Address number (slave address): 1
- Rotation direction: Forward direction (FWD)
- Operating speed: 5000 Hz

● Operation procedure

1. Send the following query and set the operating speed of the operation data No.0 to 5000 Hz.

Query

Field name		Data	Description
Slave address		01h	Slave address1
Function code		10h	Writing to multiple holding registers
Data	Register address (upper)	04h	Register address to start writing from = Operating speed No.0 (0480h)
	Register address (lower)	80h	
	Number of registers (upper)	00h	Number of registers to be written from the starting register address
	Number of registers (lower)	02h	
	Number of bytes	04h	Twice the number of registers in the query
	Value written to register address (upper)	00h	Value written to register address = 5000 Hz (0000 1388h)
	Value written to register address (lower)	00h	
	Value written to register address +1 (upper)	13h	
	Value written to register address +1 (lower)	88h	
Error check (lower)		C4h	Calculation result of CRC-16
Error check (upper)		59h	

Response

Field name		Data	Description
Slave address		01h	Same as query
Function code		10h	
Data	Register address (upper)	04h	
	Register address (lower)	80h	
	Number of registers (upper)	00h	
	Number of registers (lower)	02h	
Error check (lower)		41h	Calculation result of CRC-16
Error check (upper)		10h	

2. Send the following query and turn FWD ON.
   Continuous operation is started.

Query

Field name		Data	Description
Slave address		01h	Slave address1
Function code		06h	Writing to a holding register
Data	Register address (upper)	00h	Register address to which writing is executed = Driver input command (007Dh)
	Register address (lower)	7Dh	
	Value written (upper)	40h	Value written to register address = FWD ON (4000h)
	Value written (lower)	00h	
Error check (lower)		28h	Calculation result of CRC-16
Error check (upper)		12h	

Response

Field name		Data	Description
Slave address		01h	Same as query
Function code		06h	
Data	Register address (upper)	00h	
	Register address (lower)	7Dh	
	Value written (upper)	40h	
	Value written (lower)	00h	
Error check (lower)		28h	Calculation result of CRC-16
Error check (upper)		12h	

3. To stop continuous operation, send the following query and turn FWD OFF again.
   The motor decelerates to a stop.

Query

Field name		Data	Description
Slave address		01h	Slave address1
Function code		06h	Writing to a holding register
Data	Register address (upper)	00h	Register address to which writing is executed = Driver input command (007Dh)
	Register address (lower)	7Dh	
	Value written (upper)	00h	Value written to register address = FWD OFF (0000h)
	Value written (lower)	00h	
Error check (lower)		19h	Calculation result of CRC-16
Error check (upper)		D2h	

Response

Field name		Data	Description
Slave address		01h	Same as query
Function code		06h	
Data	Register address (upper)	00h	
	Register address (lower)	7Dh	
	Value written (upper)	00h	
	Value written (lower)	00h	
Error check (lower)		19h	Calculation result of CRC-16
Error check (upper)		D2h	

10-3 Return-to-home operation

As an example, here is a description how to execute the following return-to-home operation. For details of return-to-home operation, refer to p.182.

- **Setting example**
  - Address number (slave address): 1
  - Operation condition: Initial value
- **Operation procedure**

1. Send the following query and turn HOME ON.
   Return-to-home operation is started.

Query

Field name		Data	Description
Slave address		01h	Slave address1
Function code		06h	Writing to a holding register
Data	Register address (upper)	00h	Register address to which writing is executed = Driver input command (007Dh)
	Register address (lower)	7Dh	
	Value written (upper)	00h	Value written to register address = HOME ON (0010h)
	Value written (lower)	10h	
Error check (lower)		18h	Calculation result of CRC-16
Error check (upper)		1Eh	

Response

Field name		Data	Description
Slave address		01h	Same as query
Function code		06h	
Data	Register address (upper)	00h	
	Register address (lower)	7Dh	
	Value written (upper)	00h	
	Value written (lower)	10h	
Error check (lower)		18h	Calculation result of CRC-16
Error check (upper)		1Eh	

2. When Return-to-home operation is started, send the following query and turn HOME OFF again.

Query

Field name		Data	Description
Slave address		01h	Slave address1
Function code		06h	Writing to a holding register
Data	Register address (upper)	00h	Register address to which writing is executed = Driver input command (007Dh)
	Register address (lower)	7Dh	
	Value written (upper)	00h	Value written to register address = HOME OFF (0000h)
	Value written (lower)	00h	
Error check (lower)		19h	Calculation result of CRC-16
Error check (upper)		D2h	

Response

Field name		Data	Description
Slave address		01h	Same as query
Function code		06h	
Data	Register address (upper)	00h	
	Register address (lower)	7Dh	
	Value written (upper)	00h	
	Value written (lower)	00h	
Error check (lower)		19h	Calculation result of CRC-16
Error check (upper)		D2h	

11 Detection of communication errors

This function detects abnormalities that may occur during RS-485 communication. The abnormalities that can be detected include communication errors, alarms and warnings.

11-1 Communication errors

A communication error record will be saved in the RAM. You can check the communication errors using the **MEXE02** or "communication error record" command via RS-485 communication.

memo You can also clear the communication error records by turning off the driver power.

Type of communication error	Error code	Cause
RS-485 communication error	84h	A transmission error was detected. See "No response" on p.221.
Command not yet defined	88h	An exception response (exception code 01h, 02h) was detected. See p.221.
Execution disable due to user I/F communication in progress	89h	An exception response (exception code 04h) was detected. See p.221.
Not possible to execute because of non-volatile memory processing	8Ah	
Outside setting range	8Ch	An exception response (exception code 03h, 04h) was detected. See p.221.
Command execute disable	8Dh	An exception response (exception code 04h) was detected. See p.221.

11-2 Alarms and warnings

When an alarm generates, the ALM output will turn OFF and the motor will stop. At the same time, the ALM LED (or ALARM LED) will start blinking.
When a warning generates, the WNG output will turn ON. The motor will continue to operate. Once the cause of the warning is removed, the WNG output will turn OFF automatically.

memo You can also clear the warning records by turning off the driver power.

■ Communication switch setting error

When setting the transmission rate setting switch (SW2) to positions 8 to F, the transmission rate setting switch error will occur.

■ RS-485 communication error (84h)

The table below shows the relationship between alarms and warnings when an RS-485 communication error occurs.

Description of error	Description
Warning	A warning generates when one RS-485 communication error (84h) has been detected. If normal reception occurs while the warning is present, the warning will be reset automatically.
Alarm	An alarm generates when a RS-485 communication error (84h) has been detected consecutively by the number of times set in the "communication error alarm" parameter.

■ RS-485 communication timeout (85h)

If communication is not established with the master after an elapse of the time set by the "communication timeout" parameter, a RS-485 communication timeout alarm will generate.

12 Timing charts

■ Communication start

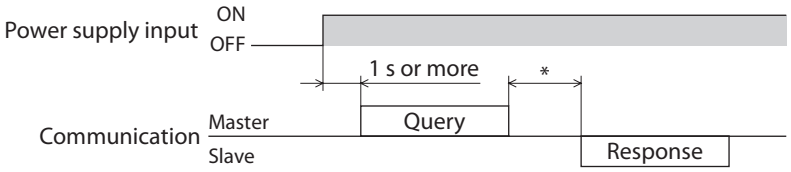

* Tb2 (transmission waiting time) + C3.5 (silent interval)

■ Operation start

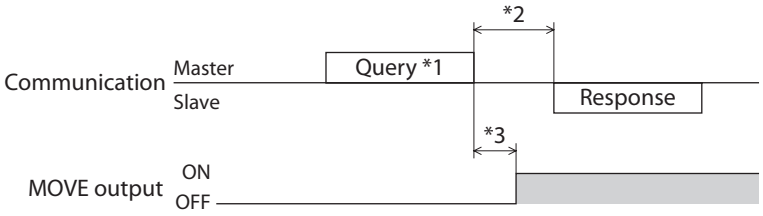

*1 A message including a query to start operation via RS-485 communication.
*2 Tb2 (transmission waiting time) + C3.5 (silent interval)
*3 C3.5 (silent interval) + 4 ms or less

■ Operation stop, speed change

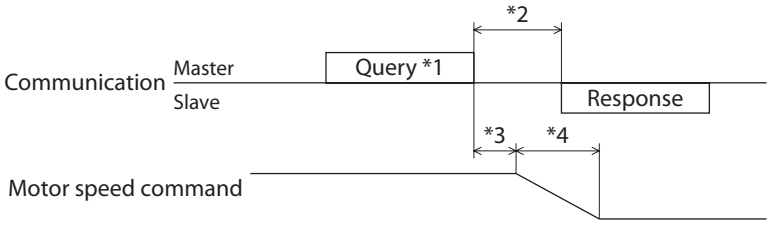

*1 A message including a query to stop operation and another to change the speed via RS-485 communication.
*2 Tb2 (transmission waiting time) + C3.5 (silent interval)
*3 The specific time varies depending on the command speed.
*4 The deceleration method to be applied at the time of stopping varies according to the "STOP input action" parameter.

■ General signals

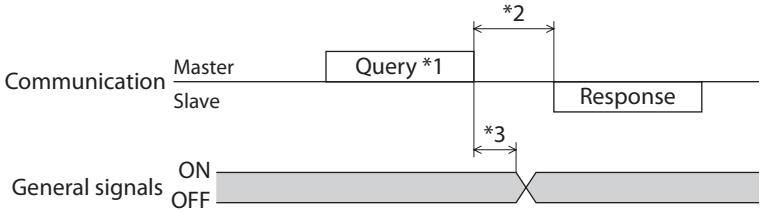

*1 A message including a query for remote output via RS-485 communication.
*2 Tb2 (transmission waiting time) + C3.5 (silent interval)
*3 C3.5 (silent interval) + 4 ms or less

■ Configuration

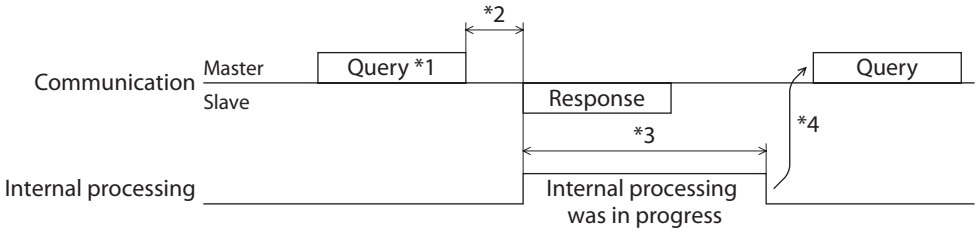

*1 A message including a query for configuration via RS-485 communication.
*2 Tb2 (transmission waiting time) + C3.5 (silent interval)
*3 Command processing time + 1 s or less
*4 Execute a query after the driver internal processing is completed.

7 Method of control via industrial network

This part explains how to control via industrial network using the network converter (accessory).

◆**Table of contents**

1 Setting the switches.....260

1-1 Setting the AC power input.....260

1-2 Setting the DC power input.....262

2 Method of control via CC-Link communication.....264

2-1 Guidance.....264

2-2 Operation example of command selection method.....269

2-3 Operation example of command fixation method.....277

3 Method of control via EtherCAT communication.....283

3-1 Guidance.....283

3-2 Basic operating procedures.....289

4 Details of remote I/O.....292

4-1 Input signals to the driver.....292

4-2 Output signals from the driver.....293

5 Command code list.....295

5-1 Group function.....295

5-2 Maintenance command.....296

5-3 Monitor command.....297

5-4 Operation data.....299

5-5 User parameters.....300

1 Setting the switches

Switches differ in the AC input driver and the DC input driver. Set properly.

1-1 Setting the AC power input

The following figures show the status of factory setting.

● Driver front side

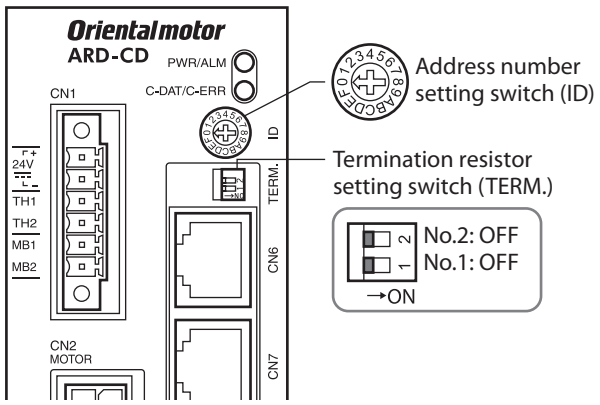

● Driver bottom side

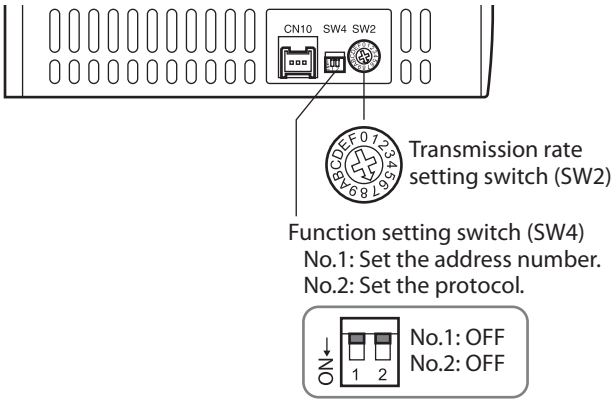

memo Be sure to turn off the driver power before setting the switches. If the switches are set while the power is still on, the new switch settings will not become effective until the driver power is cycled.

■ Protocol

Set the SW4-No.2 of the function setting switch to OFF. The network converter is selected.

Factory setting OFF

SW4-No.2	Protocol
ON	Modbus RTU protocol
OFF	Connect to the network converter

■ Address number (slave address)

Set the address number (slave address) using the address number setting switch (ID) and SW4-No.1 of the function setting switch. Make sure each address number (slave address) you set for each driver is unique.
Up to 16 units can be connected.

Factory setting ID: 0, SW4-No.1: OFF (slave address 0)

Address number	0	1	2	3	4	5	6	7	8	9	10	11	12	13	14	15
ID	0	1	2	3	4	5	6	7	8	9	A	B	C	D	E	F
SW4-No.1	OFF															

■ Transmission rate

Set the transmission rate to 625,000 bps using the transmission rate setting switch (SW2).

Factory setting 7 (625,000 bps)

■ Termination resistor

Use a termination resistor for the driver located farthest away (positioned at the end) from the network converter. Turn the termination resistor setting switches (TERM.-Nos.1 and 2) ON to set the termination resistor for RS-485 communication (120 Ω).

Factory setting Nos.1 and 2: Both OFF (termination resistor disabled)

TERM.-Nos.1 and 2	Termination resistor (120 Ω)
Both are OFF	Disabled
Both are ON	Enabled

memo If only one of No.1 or No.2 is turned ON, a communication error may occur.

For example, in the case of the following system, the termination resistor should be set to two drivers.

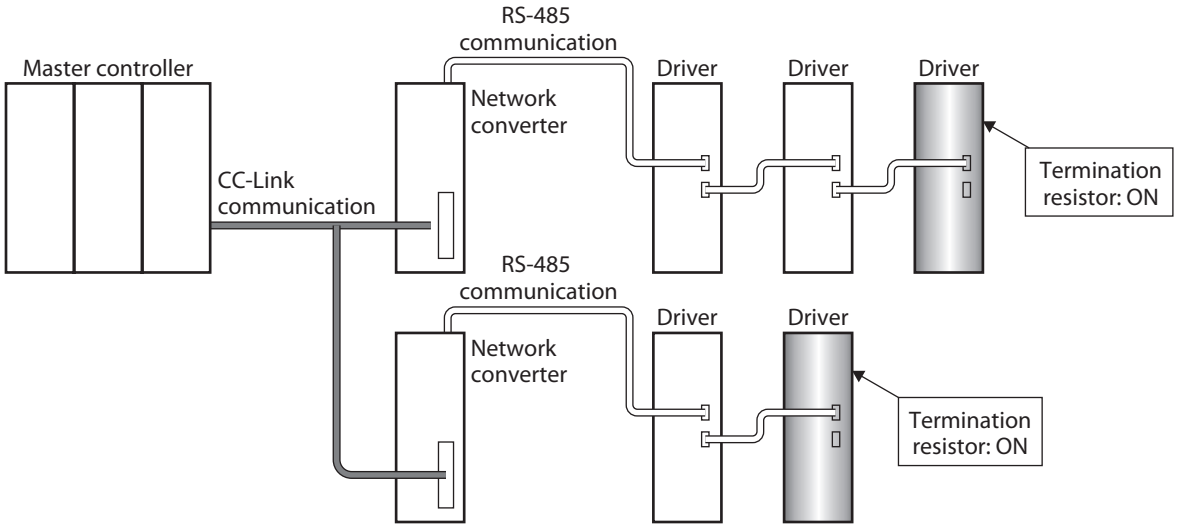

1-2 Setting the DC power input

The following figures show the status of factory setting.

● Driver front side

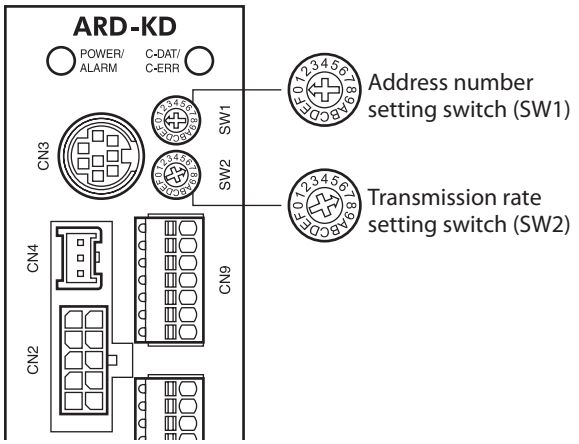

● Driver top side

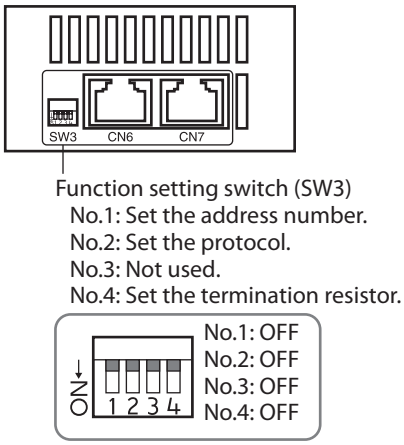

memo Be sure to turn off the driver power before setting the switches. If the switches are set while the power is still on, the new switch settings will not become effective until the driver power is cycled.

■ Protocol

Set the SW3-No.2 of the function setting switch to OFF. The network converter is selected.

Factory setting OFF

SW3-No.2	Protocol
ON	Modbus RTU protocol
OFF	Connect to the network converter

■ Address number (slave address)

Set the address number (slave address) using the address number setting switch (SW1) and SW3-No.1 of the function setting switch. Make sure each address number (slave address) you set for each driver is unique.
Up to 16 units can be connected.

Factory setting SW1: 0, SW3-No.1: OFF (slave address 0)

Address number	0	1	2	3	4	5	6	7	8	9	10	11	12	13	14	15
SW1	0	1	2	3	4	5	6	7	8	9	A	B	C	D	E	F
SW3-No.1	OFF															

■ Transmission rate

Set the transmission rate to 625,000 bps using the transmission rate setting switch (SW2).

Factory setting 7 (625,000 bps)

■ Termination resistor

Use a termination resistor for the driver located farthest away (positioned at the end) from the network converter. Turn the termination resistor setting switches (SW3-No.4) ON to set the termination resistor for RS-485 communication (120 Ω).

Factory setting OFF (termination resistor disabled)

SW3-No.4	Termination resistor (120 Ω)
OFF	Disabled
ON	Enabled

For example, in the case of the following system, the termination resistor should be set to two drivers.

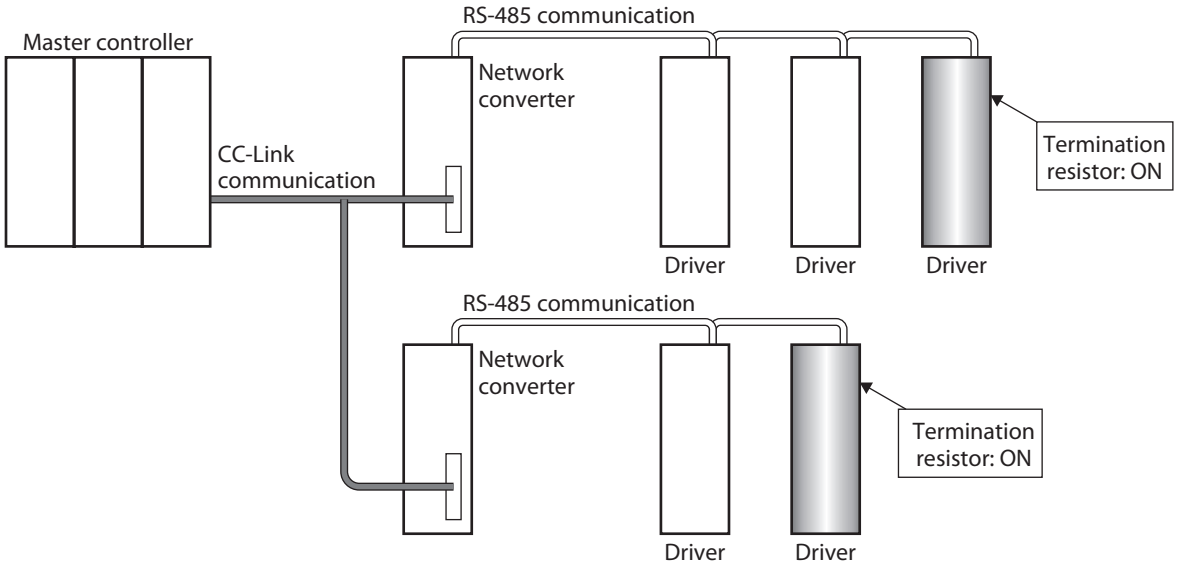

2 Method of control via CC-Link communication

2-1 Guidance

If you are new to the **AR** Series FLEX built-in controller type, read this section to understand the operating methods along with the operation flow.

STEP1	Installation and connection ⇨ p.266
↓	
STEP2	Setting of NETC02-CC ⇨ p.267
↓	
STEP3	Setting of driver ⇨ p.268
↓	
STEP4	Turn on the power and check the LED ⇨ p.269
↓	
Setting of data with selecting the command execution method	

Command selection method ⇨ p.269

This is a method to execute with setting the command code, address number, and data.
Read and write of data, monitor, and each command of maintenance are executed by the request signal "D-REQ."

Command fixation method ⇨ p.277

This is a method to execute with reading and writing data.
The command code and address number are fixed.
Write of data is started by the request signal "WR-REQ," and read of data and monitor are started by the request signal "RD-REQ."

■ Setting condition

● Setting of driver

Address number 0	AC power input
Address number 1	DC power input
Protocol	Network converter
RS-485 communication transmission rate	625,000 bps

● Setting of **NETC02-CC**

Number of connected driver	2 units
CC-Link baud rate	10 Mbps
STATION No.	No.1
Register arrangement mode	4 word arrangement

● Setting of the master device

Setting of network parameter

Remote input (RX)	RX1000
Remote output (RY)	RY1000
Remote register (RWr)	W0
Remote register (RWw)	W100
Extended cyclic setting	×2
Remote device station	4 station occupied

Setting of CC-Link master

CC-Link baud rate	10 Mbps
STATION No.	No.0

Note Before operating the motor, check the condition of the surrounding area to ensure safety.

memo The **NETC02-CC** incorporates a termination resistor for RS-485 communication. This product can be used without setting the termination resistor.

STEP 1 Check the installation and connection

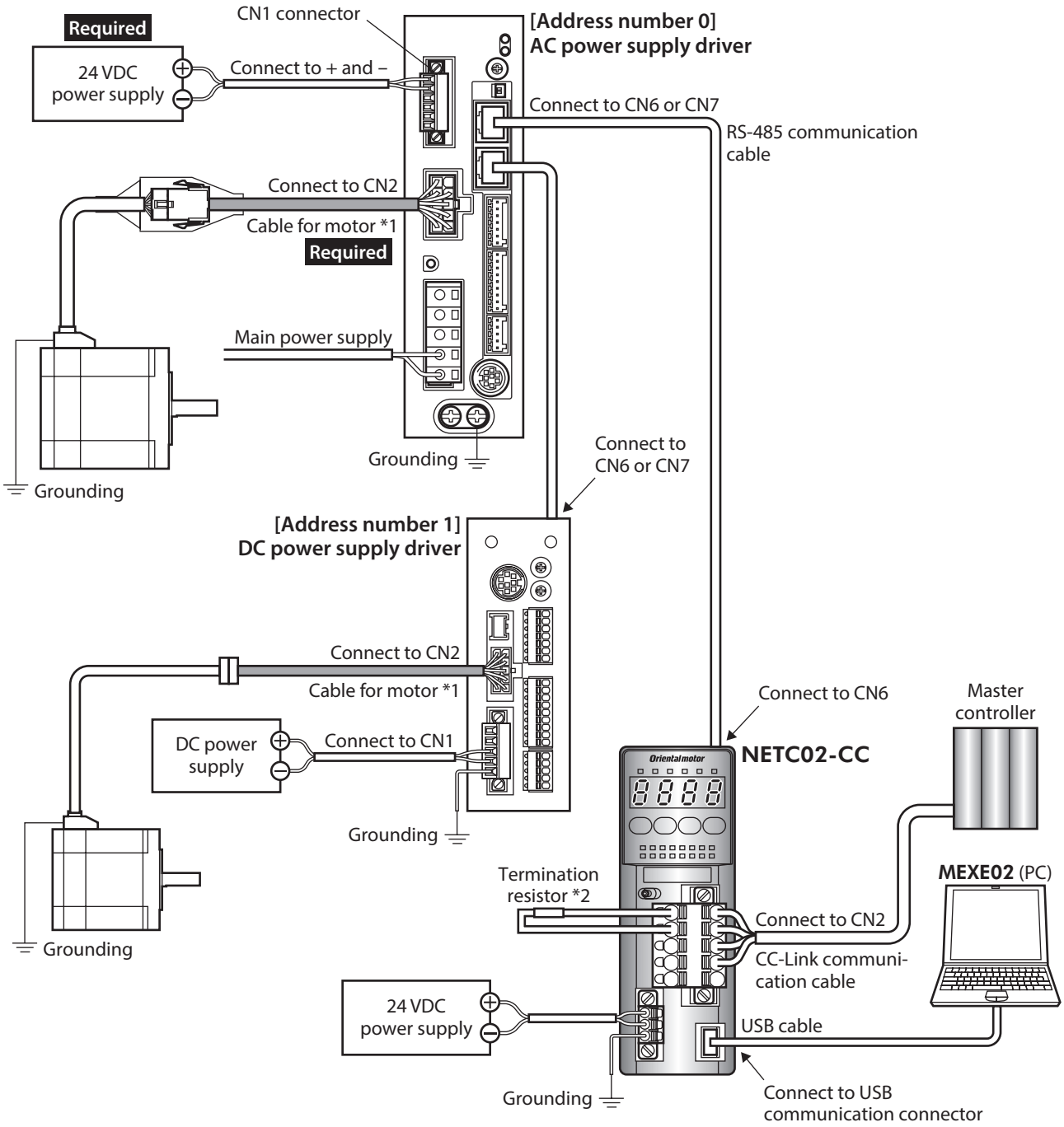

*1 Cables represented in gray color are supplied with the product or sold separately.
For DC power input, use the cable for motor when the length of the cable of motor is not enough.
*2 The termination resistor does not come with the product (110 Ω, 1/2 W).

STEP 2 Set the switches of the NETC02-CC

Set the switches provided on the upper side of the **NETC02-CC** as follows. The status becomes as shown in the following figures after setting.

Setting item	Switch	Factory setting
RS-485 communication connection unit: 2	Set N-AXIS to "2"	1
CC-Link baud rate: 10 Mbps	Set B-RATE to "4"	0
CC-Link station No.: 1	Set the ×1 to "1" and the ×10 to "0" of the STATION No.	1 (×1: 1, ×10: 0)
Operation mode: OFF	Set No.1 to No.4 to "OFF"	All OFF

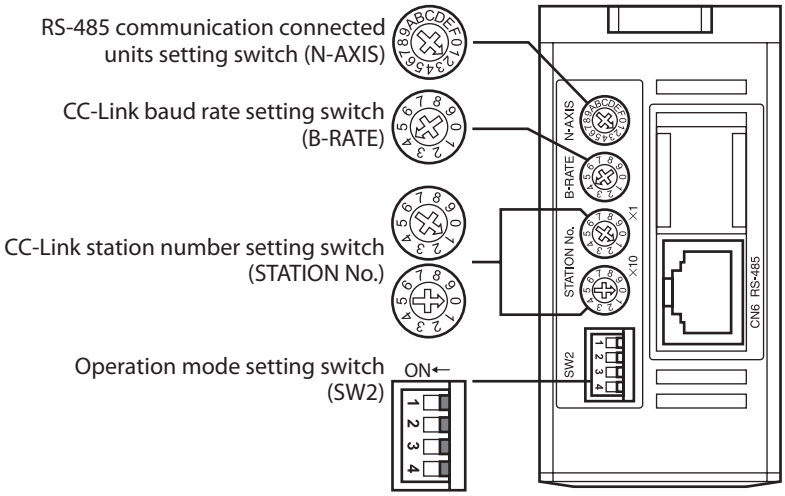

STEP 3 Set the switches of the driver

Set the following with the switches of the driver. The status becomes as shown in the following figures after setting.

Setting item	AC power input	DC power input
Protocol: Network converter	Set No.2 of SW4 to "OFF"	Set No.2 of SW3 to "OFF"
Address number: AC power input driver is "0" DC power input driver is "1"	Set No.1 of SW4 to "OFF" Set ID to "0"	Set No.1 of SW3 to "OFF" Set SW1 to "1"
Termination resistor: AC power input driver is "OFF" DC power input driver is "ON"	Set No.1 and No.2 of TERM. to "OFF"	Set No.4 of SW3 to "ON"
Transmission rate: 625,000 bps	Set SW2 to "7"	Set SW2 to "7"

■ AC power input

● Driver front side

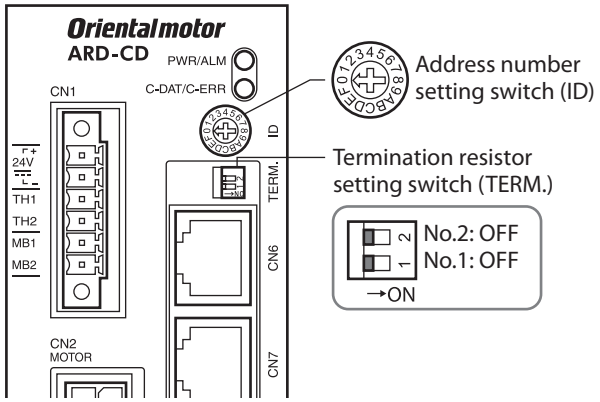

● Driver bottom side

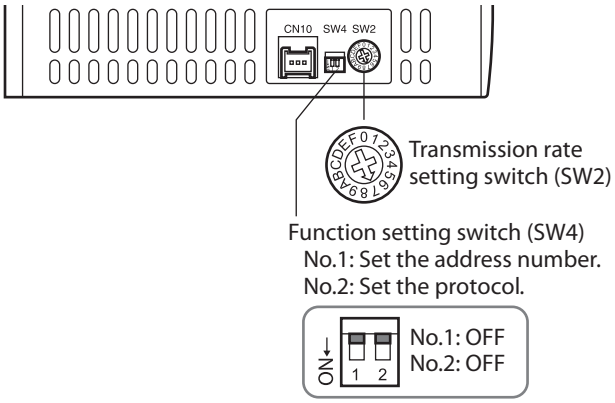

■ DC power input

● Driver front side

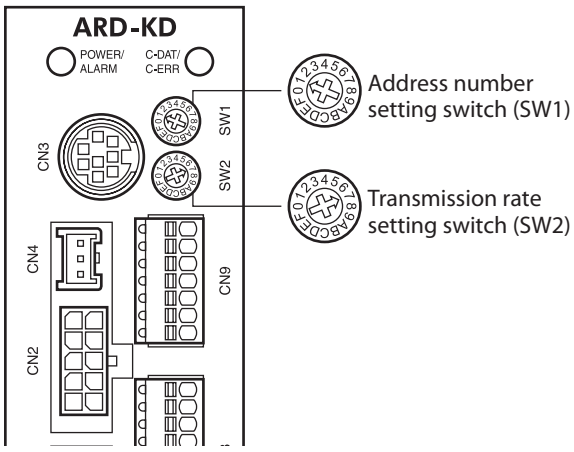

● Driver top side

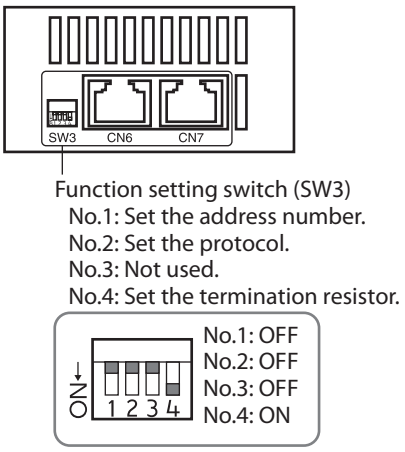

STEP 4 Turn on the power and check the LED

Check that the LED of the driver and networ converter are as shown in the figure.

■ AC power input driver ■ DC power input driver ■ Network converter

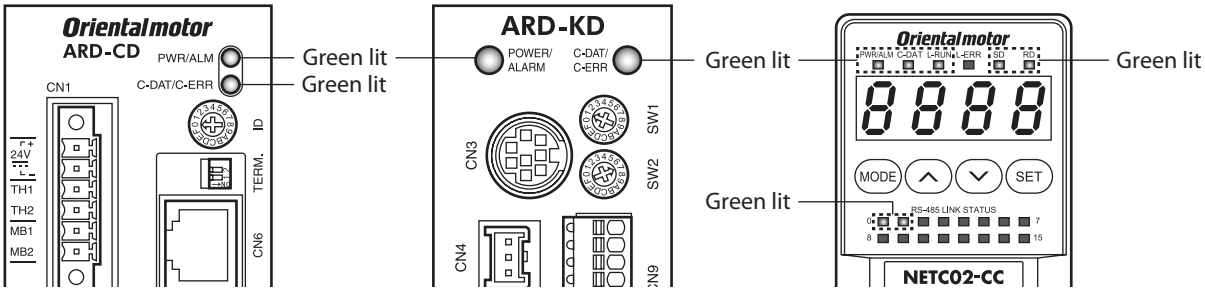

2-2 Operation example of command selection method

This section explains how to perform the following operations using the command selection method.

STEP1	Check an operation	Execute continuous operation in the reverse direction, and check if the operation is performed.
↓		
STEP2	Perform positioning operation	Set the position data, and check if the operation is performed.
↓		
STEP3	Monitor the actual position	Check if positioning operation in the STEP 2 was properly performed.
↓		
STEP4	Write to non-volatile memory	Write the position data to the non-volatile memory.

■ How to use the request signal

In the operation example, the request signals are used quite differently based on the setting of remote register.

● **Operation data, maintenance command**

Request signal	Remote register	
	Write	Read
D-REQ0	RWw100	RWr0
	RWw101	RWr1
	RWw102	RWr2
	RWw103	RWr3
D-REQ1	RWw104	RWr4
	RWw105	RWr5
	RWw106	RWr6
	RWw107	RWr7

● **Monitor command**

Request signal	Remote register	
	Write	Read
D-REQ2	RWw108	RWr8
	RWw109	RWr9
	RWw10A	RWrA
	RWw10B	RWrB
D-REQ3	RWw10C	RWrC
	RWw10D	RWrD
	RWw10E	RWrE
	RWw10F	RWrF

STEP 1 Execute continuous operation in the reverse direction by remote I/O, and check if the operation is performed.

1. Start continuous operation in the reverse direction.
   Turn the RVS ON.

Master to NETC02-CC

Address number	Remote I/O	Address	Input value	Description
0	RVS	RY100F	1	Execution of continuous operation
1		RY101F	1	

2. Stop continuous operation.
   Turn the RVS OFF.

Master to NETC02-CC

Address number	Remote I/O	Address	Input value	Description
0	RVS	RY100F	0	Stop of continuous operation
1		RY101F	0	

memo If not operated, check the setting of the switches, and assignments of remote I/O and remote register.

STEP 2 Perform positioning operation

1. In order to make easier to check that the operation was properly performed when positioning operation was performed, set the position information to "0."
   1) Set the maintenance command "P-PRESET execution (30C5h)" to remote register.

Master to NETC02-CC

Address number	Address	Input value	Description
0	RWw100	30C5h	Command code (P-PRESET execution)
	RWw101	0h	Address number
	RWw102	1	Data (lower)
	RWw103	0	Data (upper)
1	RWw104	30C5h	Command code (P-PRESET execution)
	RWw105	1h	Address number
	RWw106	1	Data (lower)
	RWw107	0	Data (upper)

memo Unless "1" is set to the data area, the command is not executed.

   2) Turn the D-REQ ON to write data to the driver.

Master to NETC02-CC

Address number	Remote I/O	Address	Input value	Description
0	D-REQ0	RY1080	1	Write execution
1	D-REQ1	RY1082	1	

3) The response of the D-END is automatically changed to "1" when it is properly processed.

NETC02-CC to master

Address number	Remote I/O	Address	Response	Description
0	D-END0	RX1080	1	Write completed
1	D-END1	RX1082	1	

4) The value written to the driver is displayed when the response of the D-END is changed to "1." Check the value is matched with the one having set in the above 1).

NETC02-CC to master

Address number	Address	Response	Description
0	RWr0	30C5h	Command code response (P-PRESET execution)
	RWr1	0h	Address number response
	RWr2	1	Data (lower)
	RWr3	0	Data (upper)
1	RWr4	30C5h	Command code response (P-PRESET execution)
	RWr5	1h	Address number response
	RWr6	1	Data (lower)
	RWr7	0	Data (upper)

5) Check it has been written properly, and turn the D-REQ OFF.

Master to NETC02-CC

Address number	Remote I/O	Address	Input value	Description
0	D-REQ0	RY1080	0	Write execution
1	D-REQ1	RY1082	0	

2. Check the position information is changed to "0" by the "P-PRESET execution" of the maintenance command.

1) Set the "actual position (2066h)" of the monitor command to remote register.

Master to NETC02-CC

Address number	Address	Input value	Description
0	RWw108	2066h	Command code (actual position)
	RWw109	0h	Address number
	RWw10A	0	Data (lower)
	RWw10B	0	Data (upper)
1	RWw10C	2066h	Command code (actual position)
	RWw10D	1h	Address number
	RWw10E	0	Data (lower)
	RWw10F	0	Data (upper)

2) Turn the D-REQ ON to write data to the driver.

Master to NETC02-CC

Address number	Remote I/O	Address	Input value	Description
0	D-REQ2	RY1084	1	Start of monitor
1	D-REQ3	RY1086	1	

3) The response of the D-END is automatically changed to "1" when it is properly processed.

NETC02-CC to master

Address number	Remote I/O	Address	Response	Description
0	D-END2	RX1084	1	During monitor
1	D-END3	RX1086	1	

4) The value written to the driver is displayed when the response of the D-END is changed to "1." Check the data area is changed to "0."

NETC02-CC to master

Address number	Address	Response	Description
0	RWr8	2066h	Command code response (actual position)
	RWr9	0h	Address number response
	RWrA	0	Data (lower)
	RWrB	0	Data (upper)
1	RWrC	2066h	Command code response (actual position)
	RWrD	1h	Address number response
	RWrE	0	Data (lower)
	RWrF	0	Data (upper)

5) Check it has been written properly, and turn the D-REQ OFF.

Master to NETC02-CC

Address number	Remote I/O	Address	Input value	Description
0	D-REQ2	RY1084	0	End of monitor
1	D-REQ3	RY1086	0	

3. Set the operation data of positioning operation.
Set the position No.0 and position data "5000 (1388h)" to remote register.

Master to NETC02-CC

Address number	Address	Input value	Description
0	RWw100	1200h	Command code (position No.0)
	RWw101	0h	Address number
	RWw102	5000 (1388h)	Data (lower)
	RWw103		Data (upper)
1	RWw104	1200h	Command code (position No.0)
	RWw105	1h	Address number
	RWw106	5000 (1388h)	Data (lower)
	RWw107		Data (upper)

4. Write the set data in the above 3 to the driver to check the response.

1) Turn the D-REQ ON.

Master to NETC02-CC

Address number	Remote I/O	Address	Input value	Description
0	D-REQ0	RY1080	1	Write execution
1	D-REQ1	RY1082	1	

2) The response of the D-END is automatically changed to "1" when it is properly processed.

NETC02-CC to master

Address number	Remote I/O	Address	Response	Description
0	D-END0	RX1080	1	Write completed
1	D-END1	RX1082	1	

3) The value written to the driver is displayed when the response of the D-END is changed to "1."
Check the value is matched with the one having set in the above 3.

NETC02-CC to master

Address number	Address	Response	Description
0	RWr0	1200h	Command code response (position No.0)
	RWr1	0h	Address number response
	RWr2	5000 (1388h)	Data (lower)
	RWr3		Data (upper)
1	RWr4	1200h	Command code response (position No.0)
	RWr5	1h	Address number response
	RWr6	5000 (1388h)	Data (lower)
	RWr7		Data (upper)

5. Check it has been written properly, and turn the D-REQ OFF.

Master to NETC02-CC

Address number	Remote I/O	Address	Input value	Description
0	D-REQ0	RY1080	0	Write completed
1	D-REQ1	RY1082	0	

6. Start positioning operation.
Turn the START ON.

Master to NETC02-CC

Address number	Remote I/O	Address	Input value	Description
0	START	RY1003	1	Start of positioning operation
1		RY1013	1	

7. When positioning operation is started, turn the START OFF.
Even if the START is turned OFF, the operation continues until the command position.

NETC02-CC to master

Address number	Remote I/O	Address	Input value	Description
0	START	RY1003	0	Turn the START OFF
1		RY1013	0	

STEP 3 Monitor the actual position

1. Set the "actual position (2066h)" of the monitor command to remote register.

Master to NETC02-CC

Address number	Address	Input value	Description
0	RWw108	2066h	Command code (actual position)
	RWw109	0h	Address number
	RWw10A	0	Data (lower)
	RWw10B	0	Data (upper)
1	RWw10C	2066h	Command code (actual position)
	RWw10D	1h	Address number
	RWw10E	0	Data (lower)
	RWw10F	0	Data (upper)

2. Write the set data in the above 1 to the driver to check the response.

1) Turn the D-REQ ON.

Master to NETC02-CC

Address number	Remote I/O	Address	Input value	Description
0	D-REQ2	RY1084	1	Start of monitor
1	D-REQ3	RY1086	1	

2) The response of the D-END is automatically changed to "1" when it is properly processed.

NETC02-CC to master

Address number	Remote I/O	Address	Response	Description
0	D-END2	RX1084	1	During monitor
1	D-END3	RX1086	1	

3) The response of the D-END is changed to "1," the monitor of the actual position is started. The monitor is continued while the D-REQ is ON.

NETC02-CC to master

Address number	Address	Response	Description
0	RWr8	2066h	Command code response (actual position)
	RWr9	0h	Address number response
	RWrA	5000 (1388h)	Data (lower)
	RWrB		Data (upper)
1	RWrC	2066h	Command code response (actual position)
	RWrD	1h	Address number response
	RWrE	5000 (1388h)	Data (lower)
	RWrF		Data (upper)

3. End the monitor.
Turn the D-REQ OFF.

Master to NETC02-CC

Address number	Remote I/O	Address	Input value	Description
0	D-REQ2	RY1084	0	End of monitor
1	D-REQ3	RY1086	0	

STEP 4 Write the position information to the non-volatile memory.

memo The non-volatile memory can be rewritten approximately 100,000 times.

1. Set the maintenance command "batch non-volatile memory write (30C9h)" to remote register.

Master to NETC02-CC

Address number	Address	Input value	Description
0	RWw100	30C9h	Command code (batch non-volatile memory write)
	RWw101	0h	Address number
	RWw102	1	Data (lower)
	RWw103	0	Data (upper)
1	RWw104	30C9h	Command code (batch non-volatile memory write)
	RWw105	1h	Address number
	RWw106	1	Data (lower)
	RWw107	0	Data (upper)

2. Write the set data in the above 1 to the driver to check the response.

1) Turn the D-REQ ON.

Master to NETC02-CC

Address number	Remote I/O	Address	Input value	Description
0	D-REQ0	RY1080	1	Write execution
1	D-REQ1	RY1082	1	

2) The response of the D-END is automatically changed to "1" when it is properly processed.

NETC02-CC to master

Address number	Remote I/O	Address	Response	Description
0	D-END0	RX1080	1	Write completed
1	D-END1	RX1082	1	

3) The value written to the driver is displayed when the response of the D-END is changed to "1." Check the value is matched with the one having set in the above 1).

NETC02-CC to master

Address number	Address	Response	Description
0	RWr0	30C9h	Command code response (batch non-volatile memory write)
	RWr1	0h	Address number response
	RWr2	1	Data (lower)
	RWr3	0	Data (upper)
1	RWr4	30C9h	Command code response (batch non-volatile memory write)
	RWr5	1h	Address number response
	RWr6	1	Data (lower)
	RWr7	0	Data (upper)

3. Check it has been written properly, and turn the D-REQ OFF.

Master to NETC02-CC

Address number	Remote I/O	Address	Input value	Description
0	D-REQ0	RY1080	0	Write completed
1	D-REQ1	RY1082	0	

memo Since the data set via CC-Link communication is saved in the RAM, it is erased when the power is turned off. If the "batch non-volatile memory write" is performed, since the data is saved in the non-volatile memory, it is stored even when the power is turned off.

2-3 Operation example of command fixation method

This section explains how to perform the following operations using the command fixation method.

STEP1	Check an operation	Execute continuous operation in the reverse direction, and check if the operation is performed.
↓		
STEP2	P-PRESET execution	Set the present position to "0."
↓		
STEP3	Monitor the value of the driver	Read the monitor of the actual position and the value of the position No.0.
↓		
STEP4	Perform positioning operation	Set the data of the position No.0 to execute positioning operation.
↓		
STEP5	Change of the position data	Change the data of the position No.0.

■ Items of register arrangement (4 words arrangement)

- **Arrangement of write**

Address number	Remote register	Description	Request signal
0	RWw100	Not used	WR-REQ0
	RWw101	Not used	
	RWw102	Position No.0 (lower)	
	RWw103	Position No.0 (upper)	
1	RWw104	Not used	
	RWw105	Not used	
	RWw106	Position No.0 (lower)	
	RWw107	Position No.0 (upper)	

- **Arrangement of read and monitor**

Address number	Remote register	Description	Request signal
0	RWr0	Actual position (lower)	RD-REQ0
	RWr1	Actual position (upper)	
	RWr2	Position No.0 (lower)	
	RWr3	Position No.0 (upper)	
1	RWr4	Actual position (lower)	
	RWr5	Actual position (upper)	
	RWr6	Position No.0 (lower)	
	RWr7	Position No.0 (upper)	

STEP 1 Execute continuous operation in the reverse direction by remote I/O, and check if the operation is performed

1. Start continuous operation in the reverse direction.
   Turn the RVS ON .

Master to NETC02-CC

Address number	Remote I/O	Address	Input value	Description
0	RVS	RY100F	1	Execution of continuous operation
1		RY101F	1	

2. Stop continuous operation.
   Turn the RVS OFF.

Master to NETC02-CC

Address number	Remote I/O	Address	Input value	Description
0	RVS	RY100F	0	Stop of continuous operation
1		RY101F	0	

memo If not operated, check the setting of the switches, and assignments of remote I/O and remote register.

STEP 2 Execute the P-PRESET (maintenance command)

1. Set the present position to "0" using the maintenance command "P-PRESET execution."

Note The maintenance command is performed with the command selection method.

1) Set the maintenance command "P-PRESET execution (30C5h)" to remote register.

Master to NETC02-CC

Address number	Address	Input value	Description
0	RWw100	30C5h	Command code (P-PRESET execution)
	RWw101	0h	Address number
	RWw102	1	Data (lower)
	RWw103	0	Data (upper)
1	RWw104	30C5h	Command code (P-PRESET execution)
	RWw105	1h	Address number
	RWw106	1	Data (lower)
	RWw107	0	Data (upper)

memo Unless "1" is set to the data area, the command is not executed.

2) Turn the D-REQ ON to write data to the driver.

Master to NETC02-CC

Address number	Remote I/O	Address	Input value	Description
0	D-REQ0	RY1080	1	Write execution
1	D-REQ1	RY1082	1	

3) The response of the D-END is automatically changed to "1" when it is properly processed.

NETC02-CC to master

Address number	Remote I/O	Address	Response	Description
0	D-END0	RX1080	1	Write completed
1	D-END1	RX1082	1	

4) The value written to the driver is displayed when the response of the D-END is changed to "1." Check the value is matched with the one having set in the above 1).

NETC02-CC to master

Address number	Address	Response	Description
0	RWr0	30C5h	Command code response (P-PRESET execution)
	RWr1	0h	Address number response
	RWr2	1	Data (lower)
	RWr3	0	Data (upper)
1	RWr4	30C5h	Command code response (P-PRESET execution)
	RWr5	1h	Address number response
	RWr6	1	Data (lower)
	RWr7	0	Data (upper)

5) Check it has been written properly, and turn the D-REQ OFF.

Master to NETC02-CC

Address number	Remote I/O	Address	Input value	Description
0	D-REQ0	RY1080	0	Write completed
1	D-REQ1	RY1082	0	

STEP 3 Monitor the value of the driver

Since the register arrangement mode is the 4 words arrangement, monitor the actual position and read the value of the position No.0.

1. Turn the RD-REQ ON.

Master to NETC02-CC

Address number	Remote I/O	Address	Input value	Description
0	RD-REQ0	RY1092	1	Start of read and monitor
1				

2. When monitor is started, the response of the RD-DAT is automatically changed to "1."

NETC02-CC to master

Address number	Remote I/O	Address	Response	Description
0	RD-DAT0	RX1092	1	During read and monitor
1				

3. When the response of the RD-DAT is changed to "1," the monitor of the actual position and read of the position No.0 are started.
   The monitor is continued while the RD-REQ is ON.

NETC02-CC to master

Address number	Address	Response	Description
0	RWr0	0	Actual position (lower)
	RWr1	0	Actual position (upper)
	RWr2	0 *	Position No.0 (lower)
	RWr3	0 *	Position No.0 (upper)
1	RWr4	0	Actual position (lower)
	RWr5	0	Actual position (upper)
	RWr6	0 *	Position No.0 (lower)
	RWr7	0 *	Position No.0 (upper)

* The initial values is "0."

Since the monitor of the actual position and read of the position No.0 are continuously performed, keep the RD-REQ to the ON-state.

STEP 4 Perform positioning operation

1. Set the operation data of positioning operation.
   Set the position data "5000 (1388h)" of the position No.0 to remote register.

Master to NETC02-CC

Address number	Address	Input value	Description
0	RWw100	0	Not used
	RWw101	0	Not used
	RWw102	5000 (1388h)	Position No.0 (lower)
	RWw103		Position No.0 (upper)
1	RWw104	0	Not used
	RWw105	0	Not used
	RWw106	5000 (1388h)	Position No.0 (lower)
	RWw107		Position No.0 (upper)

2. Write the set data in the above 1 to the driver to check the response.
   1) Turn the WR-REQ ON.

Master to NETC02-CC

Address number	Remote I/O	Address	Input value	Description
0	WR-REQ0	RY1090	1	Start of write
1				

   2) The response of the WR-DAT is automatically changed to "1" when it is properly processed.

NETC02-CC to master

Address number	Remote I/O	Address	Response	Description
0	WR-DAT0	RX1090	1	During write
1				

3) Since the RD-REQ is kept to the ON-state in the STEP 3, the write value is displayed at the same time the data of the position No.0 is set.
Check the data of the position No.0 is matched with the set value.

NETC02-CC to master

Address number	Address	Response	Description
0	RWr0	0	Actual position (lower)
	RWr1	0	Actual position (upper)
	RWr2	5000 (1388h)	Position No.0 (lower)
	RWr3		Position No.0 (upper)
1	RWr4	0	Actual position (lower)
	RWr5	0	Actual position (upper)
	RWr6	5000 (1388h)	Position No.0 (lower)
	RWr7		Position No.0 (upper)

3. Start positioning operation.
Turn the START ON.

Master to NETC02-CC

Address number	Remote I/O	Address	Input value	Description
0	START	RY1003	1	Start of positioning operation
1		RY1013	1	

memo Since the RD-REQ is kept to the ON-state in the STEP 3, the monitor of the actual position is started at the same time that positioning operation is started.

4. When positioning operation is started, turn the START OFF.
Even if the START is turned OFF, the operation continues until the command position.

NETC02-CC to master

Address number	Remote I/O	Address	Input value	Description
0	START	RY1003	0	Turn the START OFF
1		RY1013	0	

5. When positioning operation was completed, check the actual position changes to "5000 (1388h)."

NETC02-CC to master

Address number	Address	Response	Description
0	RWr0	5000 (1388h)	Actual position (lower)
	RWr1		Actual position (upper)
	RWr2	5000 (1388h)	Position No.0 (lower)
	RWr3		Position No.0 (upper)
1	RWr4	5000 (1388h)	Actual position (lower)
	RWr5		Actual position (upper)
	RWr6	5000 (1388h)	Position No.0 (lower)
	RWr7		Position No.0 (upper)

Since the data of the position No.0 is continuously written, keep the WR-REQ to the ON-state.

STEP 5 Change the position data of the operation data No.0

1. Set the position data "3000 (BB8h)" of the position No.0 to remote register.
   Since the WR-REQ is kept to the ON-state in the STEP 4, the write value is displayed at the same time the data of the position No.0 is set.

Master to NETC02-CC

Address number	Address	Input value	Description
0	RWw100	0	Not used
	RWw101	0	Not used
	RWw102	3000 (BB8h)	Position No.0 (lower)
	RWw103		Position No.0 (upper)
1	RWw104	0	Not used
	RWw105	0	Not used
	RWw106	3000 (BB8h)	Position No.0 (lower)
	RWw107		Position No.0 (upper)

Also, since the RD-REQ is kept to the ON-state in the STEP 3, the write value is read at the same time the data of the position No.0 is set.
Check the value is matched with the one having set in the above 1.

NETC02-CC to master

Address number	Address	Response	Description
0	RWr0	5000 (1388h)	Actual position (lower)
	RWr1		Actual position (upper)
	RWr2	3000 (BB8h)	Position No.0 (lower)
	RWr3		Position No.0 (upper)
1	RWr4	5000 (1388h)	Actual position (lower)
	RWr5		Actual position (upper)
	RWr6	3000 (BB8h)	Position No.0 (lower)
	RWr7		Position No.0 (upper)

2. Turn the WR-REQ and RD-REQ OFF.

Master to NETC02-CC

Address number	Remote I/O	Address	Input value	Description
0	WR-REQ0	RY1090	0	Write completed
1				
0	RD-REQ0	RY1092	0	Read and monitor completed
1				

3 Method of control via EtherCAT communication

3-1 Guidance

If you are new to the **AR** Series FLEX built-in controller type, read this section to understand the operating methods along with the operation flow.

STEP1	Installation and connection ⇨ p.284	
↓		
STEP2	Setting of **NETC01-ECT** ⇨ p.285	Parameters are enabled after the power is cycled.
↓		
STEP3	Setting of driver ⇨ p.287	
↓		
STEP4	Turn on the power and check the LED ⇨ p.288	Parameters are enabled after the power is cycled.
↓		
STEP5	Operation of motor ⇨ p.288	

- **Operation condition**

Here, the motor is supposed to be operated under the following conditions.

- **NETC01-ECT** node address: 1
- Number of divers connected: 1
- Driver address number: 0
- Driver termination resistor: Enabled

Note

- Before operating the motor, check the condition of the surrounding area to ensure safety.
- Before starting guidance, import the ESI file to the EtherCAT Configuration Tool of the PLC and register the PLC configuration in advance. For details about ESI file, contact your nearest Oriental Motor sales office.

memo

The termination resistor for the **NETC01-ECT** is built into the product. This product can be used without setting the termination resistor.

STEP 1 Check the installation and connection

■ AC power input driver

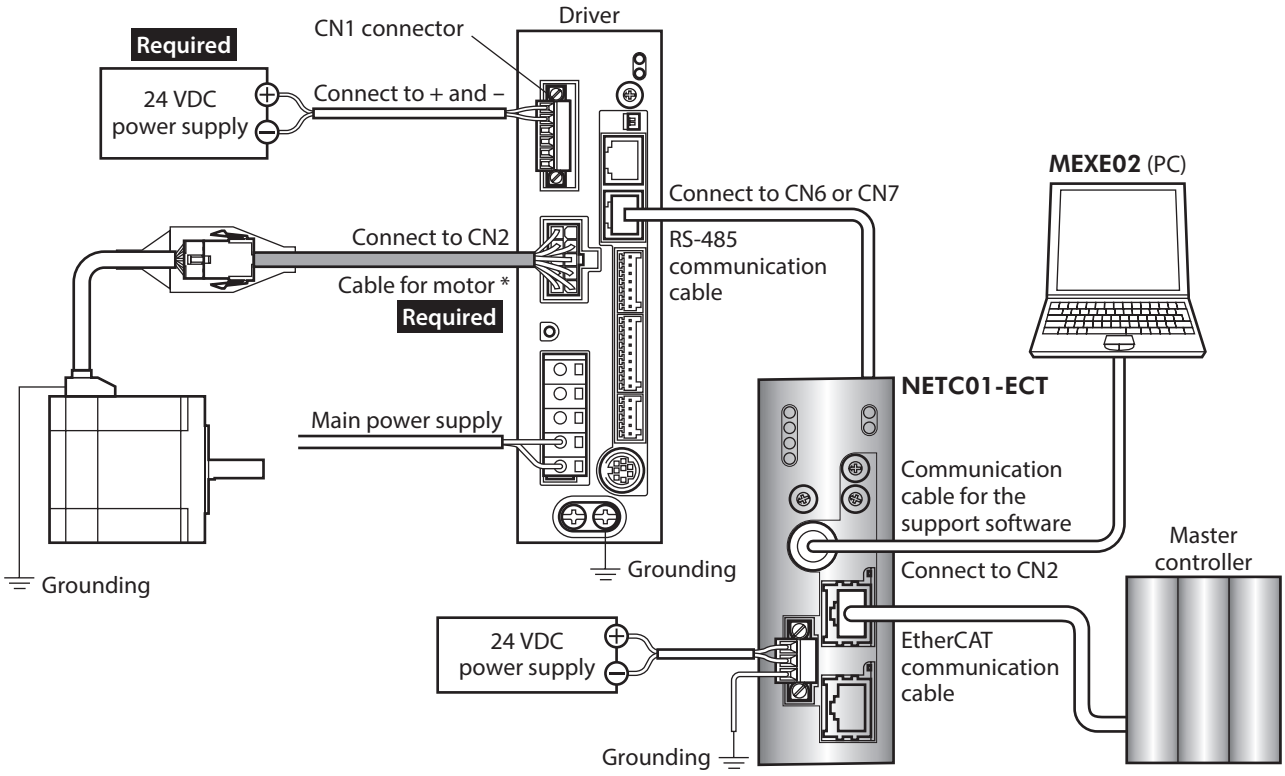

* Cables represented in gray color are supplied with the product or sold separately.

■ DC power input driver

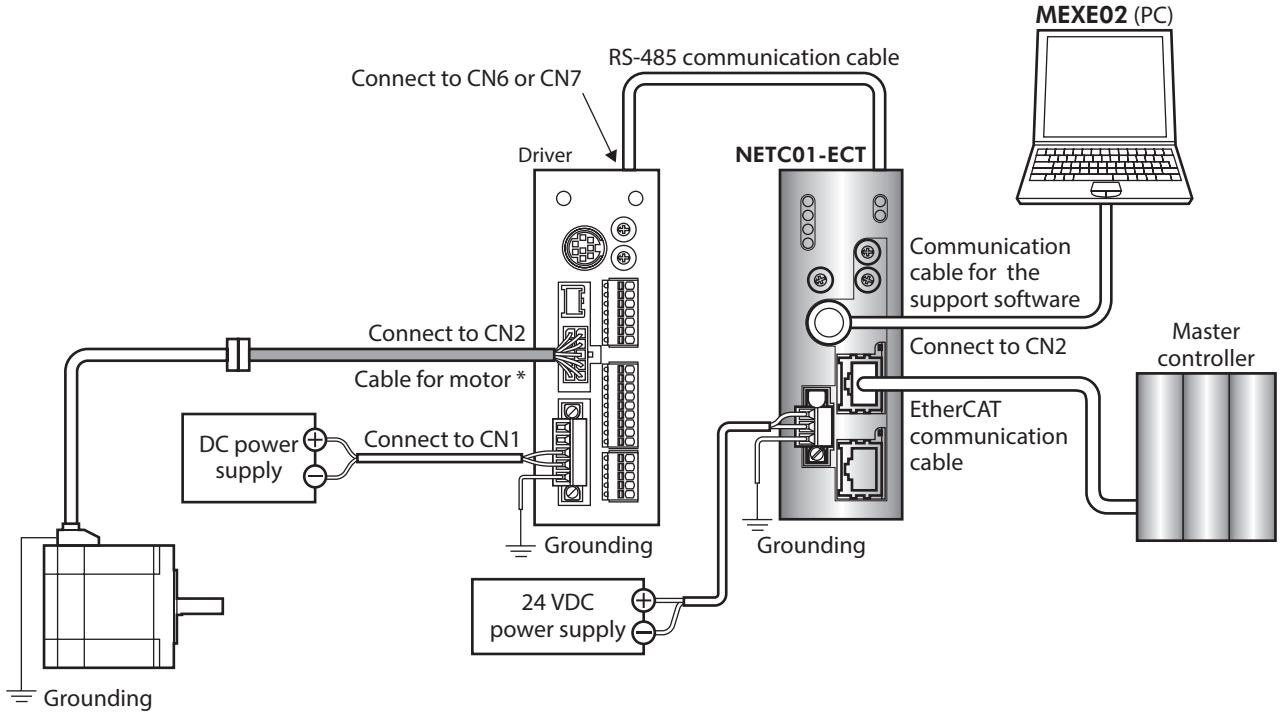

* Cables represented in gray color are supplied with the product or sold separately.
Use when the cable lenght is not long enough.

STEP 2 Set the parameters and switches of the NETC01-ECT

Set the parameters and switches of the **NETC01-ECT**.

1. Turn on the power to the **NETC01-ECT**.
   At this time, since parameters and switches are not set, the ALARM LED will be lit.
   Move on the next procedure, and set parameters and switches.

2. Start the **MEXE02** and set the parameters.
   Select the NETC EtherCAT compatible.

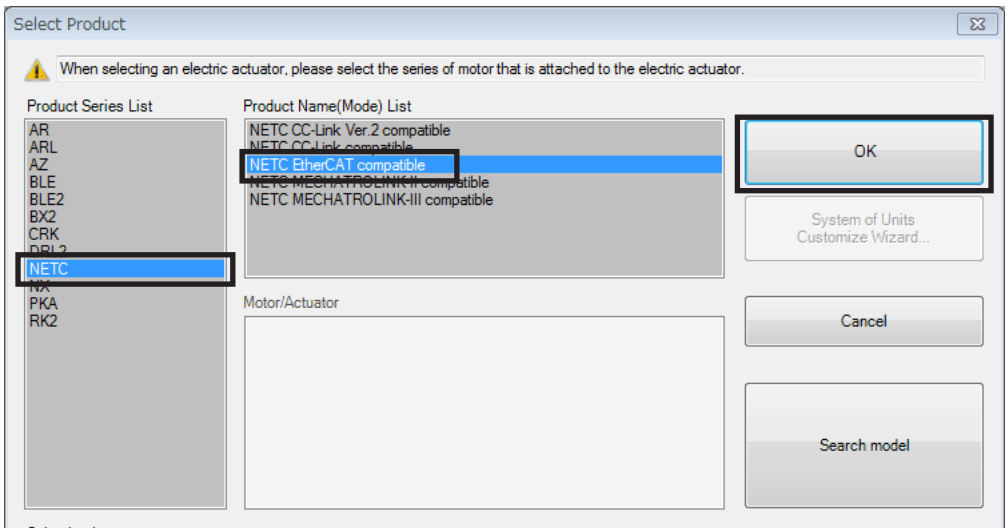

3. Set the "connection (axis #)" parameter of the driver connected to the **NETC01-ECT** to "enable" using the **MEXE02**.
   The initial value in the "connection (axis #0)" parameter is set to "enable." When the connected driver is 1 unit and the address number of the driver is "0," it is not required to set the "connection (axis #)" parameter.

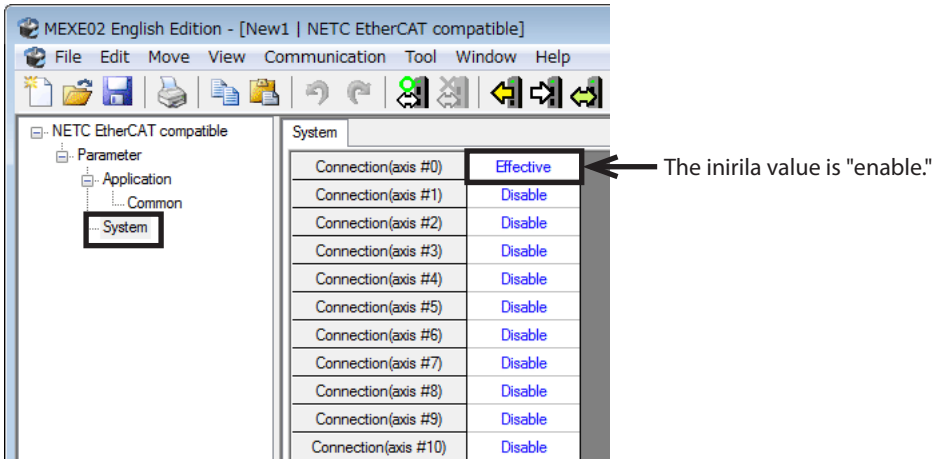

MEXE02 tree view	Parameter name	Description	Initial value
System	Connection (axis #0)	Enables the address number of the driver connected to the **NETC01-ECT**. **[Setting range]** Disable Enable	Enable
	Connection (axis #1) to Connection (axis #15)		Disable

4. Set the switches of the **NETC01-ECT.**
   Set as the illustration below.

Setting contents	Switch	Factory setting
RS-485 communication transmission rate: 625 kbps	Set SW1 to 7	7
EtherCAT node address: 1	Set ×10 of ECAT ID to 0, ×1 to 1	1 (×10: 0, ×1: 1)

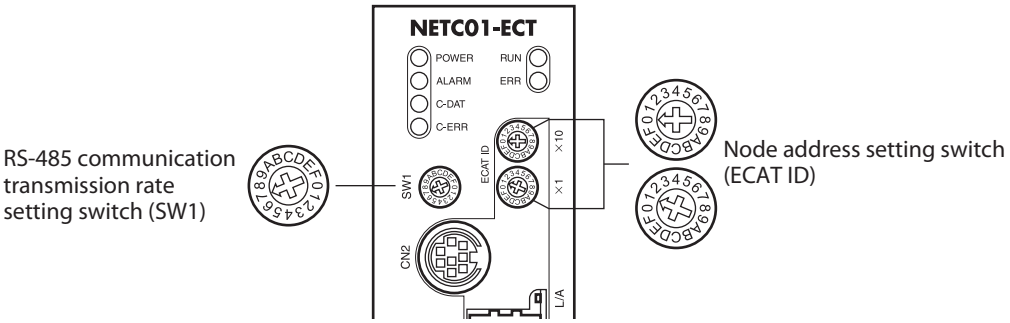

5. Turn off the **NETC01-ECT** power.

memo

- When multiple drivers are connected, set the "connection (axis #)" parameters as many as the drivers.
- To activate the changed "connection (axis #)" parameter, cycling the power supply is required.
- For the SW1, always set to "7." If the switch is set to the dial of "8" or higher, the communication switch setting error alarm will be generated when turning on the power. And do not set the switch to the dial of "0" to "6" because they cannot be used. (An alarm will not be generated.)

STEP 3 Set the switches of the driver

Set the following with the switches of the driver. For the protocol, select "OFF" (network converter).
The status becomes as shown in the following figures after setting.

Setting contents	AC power input	DC power input
Protocol: Network converter	Set No.2 of SW4 OFF	Set No.2 of SW3 OFF
Address number: 0	Set No.1 of SW4 to OFF, set ID to 0	Set No.1 of SW3 to OFF, set SW1 to 0
Termination resistor: ON	Set No.1 and No.2 of TERM. ON	Set No.4 of SW3 ON
Transmission rate: 625,000 bps	Set SW2 to 7	Set SW2 to 7

memo For the address number, set the one with the "connection (axis #)" parameter of the **NETC01-ECT** set to "enable."

■ AC power input

● Driver front side

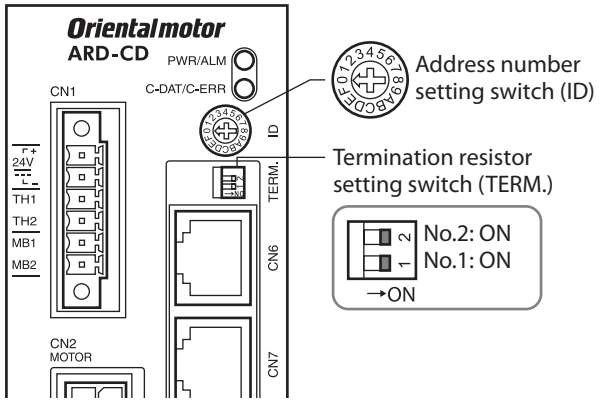

● Driver bottom side

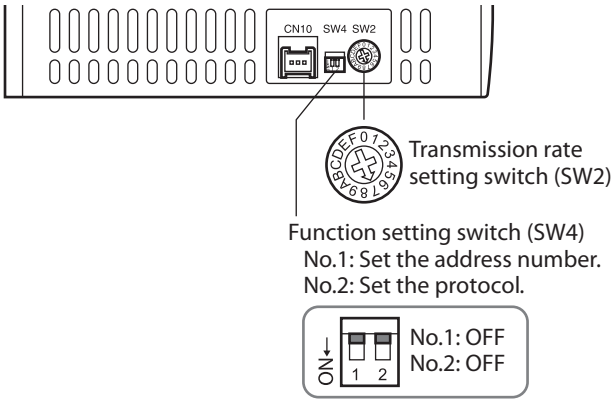

■ DC power input

● Driver front side

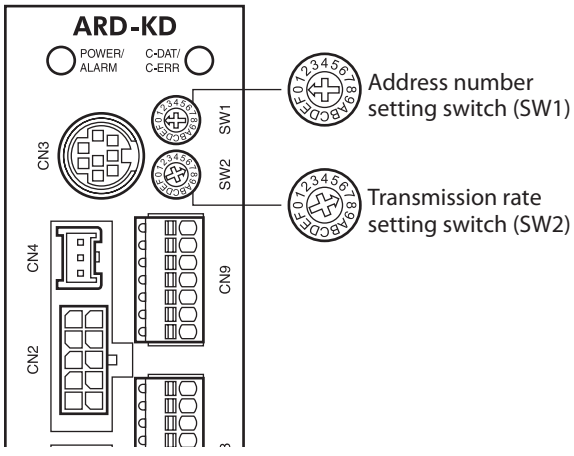

● Driver top side

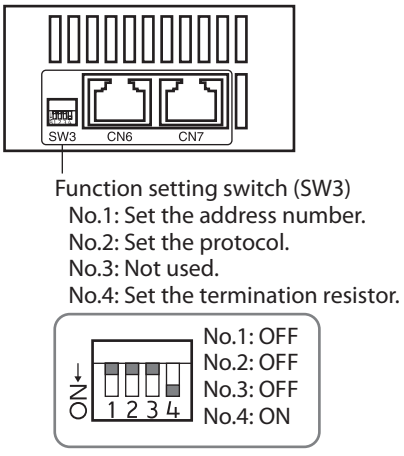

STEP 4 Turn on the power and check the LED

Check that the LED of the driver and **NETC01-ECT** are as shown in the figure.

■ **AC power input driver** ■ **DC power input driver** ■ **Network converter**

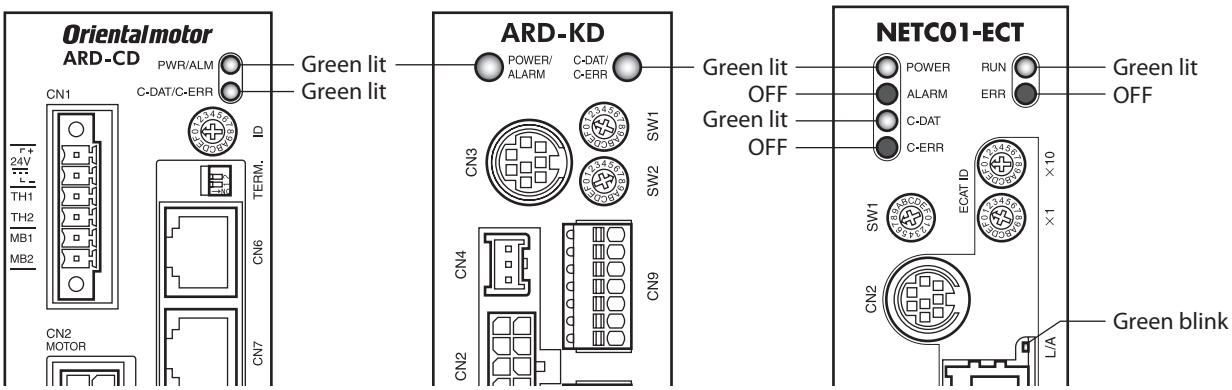

- When the C-DAT/C-ERR LED (red) of the driver or the C-ERR LED (red) of the **NETC01-ECT** is lit: Check the transmission rate of RS-485 communication or the address number.
- When the ERR LED (red) of the **NETC01-ECT** is blink: An EtherCAT communication error has been occurred. Check the error content.

STEP 5 Perform continuous operation via remote I/O of EtherCAT communication

Turn FWD of the address number 0 ON with the remote I/O of EtherCAT communication. Continuous operation for the operation data No.0 is started at the 1000 Hz of starting speed.
Initial values of the remote I/O are as follows.

● **Master to NETC01-ECT**

CoE Index	Sub-index	Name	Type	Access	Description							
2600h	0	–	U8	R	Number of Sub-index: 2							
	1	I/O command (lower)	U8	RW	bit[7]	bit[6]	bit[5]	bit[4]	bit[3]	bit[2]	bit[1]	bit[0]
					NET-IN7	NET-IN6	NET-IN5	NET-IN4	NET-IN3	NET-IN2	NET-IN1	NET-IN0
					No function	FREE	STOP	HOME	START	M2	M1	M0
	2	I/O command (upper)	U8	RW	bit[7]	bit[6]	bit[5]	bit[4]	bit[3]	bit[2]	bit[1]	bit[0]
					NET-IN15	NET-IN14	NET-IN13	NET-IN12	NET-IN11	NET-IN10	NET-IN9	NET-IN8
					RVS	FWD	–JOG	+JOG	SSTART	MS2	MS1	MS0

STEP 6 Were you able to operate the motor properly?

How did it go? Were you able to operate the motor properly? If the motor does not function, check the following points:

- Is an alarm generated in the driver or **NETC01-ECT**?
- Are the power supply, motor and RS-485 communication cable connected securely?
- Are the protocol, address number, transmission rate and termination resistor set correctly?
- Is the "connection (axis #)" parameter of the **NETC01-ECT** set correctly?
- Is the C-DAT LED of **NETC01-ECT** turned off? Or is the C-ERR LED lit in red? (A RS-485 communication error has been occurred.)
- Is the ERR LED of **NETC01-ECT** blinks in red? (An EtherCAT communication error has been occurred.)
- Is the L/A LED of **NETC01-ECT** turnde off? Or is it blinks in green? (An EtherCAT communication error has been occurred.)
- Is the motor excited, or is the setting of the excitation method correct?
- Are the parameters of the driver set correctly?
- Is the operation stop signal input to the driver?

3-2 Basic operating procedures

This section explains how to perform positioning operation and monitor function as basic operating procedures. This is an example of the operating procedure for controlling via EtherCAT communication using the **NETC01-ECT**.

■ Positioning operation

● Setting example

- Driver address number (slave address): 0
- Operation data No.1
- Position (travel amount): 5000 steps

● Operating procedure

1. Send the following remote register to set the position (travel amount) of the operation data No.1 to 5000 steps. When the TRIG is turned ON, the data set in the remote register is written.

[Remote register command of **NETC01-ECT**]

CoE Index	Sub-Index	Item	Type	Access	Description							
2800h (address number 0)	0	–	U8	R	Sub-index number: 4							
	1	Axis	U8	RW	Reserved (not used)							
	2	Command	U16	RW	Command code: 1201h (position of operation data No.1)							
	3	Data	INT32	RW	Data: 5000 (travel amount: 5000 steps)							
	4	TRIG	U8	RW	bit[7]	bit[6]	bit[5]	bit[4]	bit[3]	bit[2]	bit[1]	bit[0]
					–	–	–	–	–	–	–	TRIG

2. When the data writing is completed properly, the TRIG_R is turned ON. At this time, the STATUS remains OFF. Turn the TRIG OFF again after writing.

[Remote register response of **NETC01-ECT**]

CoE Index	Sub-index	Item	Type	Access	Description							
2900h (address number 0)	0	–	U8	R	Sub-index number: 4							
	1	Axis	U8	R	Reserved (not used)							
	2	Command	U16	R	Command code response: 1201h							
	3	Data	INT32	R	Data response: 5000							
	4	Status	U8	R	bit[7]	bit[6]	bit[5]	bit[4]	bit[3]	bit[2]	bit[1]	bit[0]
					–	–	–	–	Command Error	Axis Error	STATUS	TRIG_R

memo

- If the TRIG was turned ON, be sure to turn it OFF again.
- When the data is written with the TRIG, the data is saved in the RAM. If the data is saved in the non-volatile memory, execute the "batch non-volatile memory (3E85h)" of the maintenance command.

3. Send the following remote I/O to turn the M0 and START ON (9h).
   Positioning operation is started. If the motor rotates for 5000 steps, the positioning operation was successful.

[Remote I/O of **NETC01-ECT**]

CoE Index	Sub-Index	Item	Type	Access	Description							
2600h (address number 0)	0	–	U8	R	Sub-index number: 2							
	1	I/O command (lower)	U8	RW	bit[7]	bit[6]	bit[5]	bit[4]	bit[3]	bit[2]	bit[1]	bit[0]
					NET-IN7	NET-IN6	NET-IN5	NET-IN4	NET-IN3	NET-IN2	NET-IN1	NET-IN0
	2	I/O command (upper)	U8	RW	bit[7]	bit[6]	bit[5]	bit[4]	bit[3]	bit[2]	bit[1]	bit[0]
					NET-IN15	NET-IN14	NET-IN13	NET-IN12	NET-IN11	NET-IN10	NET-IN9	NET-IN8

[NET-IN of **AR** Series (initial value)]

CoE Index	Sub-Index	Item	Type	Access	Description							
2600h (address number 0)	0	–	U8	R	Sub-index number: 2							
	1	I/O command (lower)	U8	RW	NET-IN7	NET-IN6	NET-IN5	NET-IN4	NET-IN3	NET-IN2	NET-IN1	NET-IN0
					No function	FREE	STOP	HOME	START	M2	M1	M0
	2	I/O command (upper)	U8	RW	NET-IN15	NET-IN14	NET-IN13	NET-IN12	NET-IN11	NET-IN10	NET-IN9	NET-IN8
					RVS	FWD	–JOG	+JOG	SSTART	MS2	MS1	MS0

■ Monitor function

● Setting example

- Driver address number (slave address): 0
- Operation data No.0 (the speed was set to 1000 [Hz])
- Monitor item: Actual speed [r/min]
- Connected driver: **AR** Series

● Operating procedure

1. Send the following remote monitor command to turn the TRIG ON.
   The monitor of the actual speed [r/min] of the address number 0 is started.

[Remote monitor command of **NETC01-ECT**]

CoE Index	Sub-Index	Item	Type	Access	Description							
2A00h (address number 0)	0	–	U8	R	Sub-index number: 4							
	1	Axis	U8	RW	Address number: 0							
	2	Command	U16	RW	Command code: 2067h (monitor of actual speed [r/min])							
	3	Data	INT32	RW	Reserved (not used)							
	4	TRIG	U8	RW	bit[7]	bit[6]	bit[5]	bit[4]	bit[3]	bit[2]	bit[1]	bit[0]
					–	–	–	–	–	–	–	TRIG

2. Send the following remote I/O to turn the FWD (40h) of the address number 0 ON.
   Continuous operation in the forward direction is started.

[Remote I/O of **NETC01-ECT**]

CoE Index	Sub-Index	Item	Type	Access	Description							
2600h (address number 0)	0	–	U8	R	Sub-index number: 2							
	1	I/O command (lower)	U8	RW	bit[7]	bit[6]	bit[5]	bit[4]	bit[3]	bit[2]	bit[1]	bit[0]
					NET-IN7	NET-IN6	NET-IN5	NET-IN4	NET-IN3	NET-IN2	NET-IN1	NET-IN0
	2	I/O command (upper)	U8	RW	bit[7]	bit[6]	bit[5]	bit[4]	bit[3]	bit[2]	bit[1]	bit[0]
					NET-IN15	NET-IN14	NET-IN13	NET-IN12	NET-IN11	NET-IN10	NET-IN9	NET-IN8

[NET-IN of **AR** Series (initial value)]

CoE Index	Sub-Index	Item	Type	Access	Description							
2600h (address number 0)	0	–	U8	R	Sub-index number: 2							
	1	I/O command (lower)	U8	RW	NET-IN7	NET-IN6	NET-IN5	NET-IN4	NET-IN3	NET-IN2	NET-IN1	NET-IN0
					No function	FREE	STOP	HOME	START	M2	M1	M0
	2	I/O command (upper)	U8	RW	NET-IN15	NET-IN14	NET-IN13	NET-IN12	NET-IN11	NET-IN10	NET-IN9	NET-IN8
					RVS	FWD	–JOG	+JOG	SSTART	MS2	MS1	MS0

3. If the data of the address number 0 is monitored by the remote monitor response, the communication was successful.
   The TRIG_R is turned ON while the monitor is performed properly. At this time, the STATUS remains OFF.

memo The monitor is continued to update while the TRIG of the remote monitor command is being ON.

[Remote monitor response of **NETC01-ECT**]

CoE Index	Sub-Index	Item	Type	Access	Description							
2B00h (address number 0)	0	–	U8	R	Sub-index number: 4							
	1	Axis	U8	R	Address number response: 0							
	2	Command	U16	R	Command code response: 2067h							
	3	Data	INT32	R	Monitor data: 1000							
	4	Status	U8	R	bit[7]	bit[6]	bit[5]	bit[4]	bit[3]	bit[2]	bit[1]	bit[0]
					–	–	–	–	Command Error	Axis Error	STATUS	TRIG_R

4. Turn the TRIG OFF again to finish the monitor.

4 Details of remote I/O

Remote I/Os are common to all network converters.

4-1 Input signals to the driver

The input signals shown below can be assigned to the NET-IN0 to NET-IN15 of the remote I/O using the parameters. See the following table for the assignments of the NET-IN0 to NET-IN15. The value in [ ] is the initial value.
For details on parameter, refer to "5-5 User parameters" on p.300.

bit15	bit14	bit13	bit12	bit11	bit10	bit9	bit8
NET-IN15 [RVS]	NET-IN14 [FWD]	NET-IN13 [–JOG]	NET-IN12 [+JOG]	NET-IN11 [SSTART]	NET-IN10 [MS2]	NET-IN9 [MS1]	NET-IN8 [MS0]
bit7	bit6	bit5	bit4	bit3	bit2	bit1	bit0
NET-IN7 [No function]	NET-IN6 [FREE]	NET-IN5 [STOP]	NET-IN4 [HOME]	NET-IN3 [START]	NET-IN2 [M2]	NET-IN1 [M1]	NET-IN0 [M0]

Signal name	Function	Setting range
No function	Sets when the input terminal is not used.	–
FWD	Executes continuous operation in the positive direction.	0: Deceleration stop 1: Operation
RVS	Executes continuous operation in the negative direction.	
HOME	Executes return-to-home operation.	0: No operation 1: Start operation
START	Executes positioning operation.	
SSTART	Executes sequential positioning operation.	
+JOG	Executes JOG operation in the positive direction.	
–JOG	Executes JOG operation in the negative direction.	
MS0 to MS5	Executes direct positioning operation of the operation data No. set by the I/O parameter.	
FREE	Stops the motor excitation and release the electromagnetic brake.	0: No operation 1: Electromagnetic brake release, motor non-excitation
C-ON	Switches the motor excitation between excitation and non-excitation.	0: Motor non-excitation 1: Motor excitation
STOP	Stops of the motor operation.	0: No operation 1: Stop operation
ALM-RST *	Resets the current alarm.	0: No operation 1: Reset alarm
P-PRESET *	Executes position preset.	0: No operation 1: Execute preset
P-CLR *	Resets the absolute position error alarm.	0: No operation 1: Reset alarm
HMI	Releases of the function limitation of the **MEXE02** or **OPX-2A**.	0: Function limitation 1: Function limitation release
R0 to R15	General signals. Use these signals when controlling the system via RS-485 communication.	0: OFF 1: ON
M0 to M5	Selects the operation data No. using these six bits. See p.95 for details on the combination.	0: OFF 1: ON (Operation data Nos.0 to 63 can be selected.)

* It cannot be set in the driver that is before the specification change. Refer to p.7 for details.

memo

- Do not assign the same input signal to multiple input terminals. When the same input signal is assigned to multiple input terminals, the function will be executed if any of the terminals becomes active.
- The ALM-RST input and P-CLR input will be executed when turning from ON (1) to OFF (0). The P-PRESET input will be executed when turning from OFF (0) to ON (1).
- When the C-ON input and HMI input are not assigned to the input terminals, these inputs will always be set to ON (1). When assigning to both direct I/O and remote I/O, the function will be executed when both of them are set to ON (1).

4-2 Output signals from the driver

The output signals shown below can be assigned to the NET-OUT0 to NET-OUT15 of the remote I/O using the parameters.
See the following table for the assignments of the NET-OUT0 to NET-OUT15. The value in [ ] is the initial value.
For details on parameter, refer to "5-5 User parameters" on p.300.

bit15	bit14	bit13	bit12	bit11	bit10	bit9	bit8
NET-OUT15 [TLC]	NET-OUT14 [END]	NET-OUT13 [MOVE]	NET-OUT12 [TIM]	NET-OUT11 [AREA3]	NET-OUT10 [AREA2]	NET-OUT9 [AREA1]	NET-OUT8 [S-BSY]
bit7	bit6	bit5	bit4	bit3	bit2	bit1	bit0
NET-OUT7 [ALM]	NET-OUT6 [WNG]	NET-OUT5 [READY]	NET-OUT4 [HOME-P]	NET-OUT3 [START_R]	NET-OUT2 [M2_R]	NET-OUT1 [M1_R]	NET-OUT0 [M0_R]

Signal name	Function	Data read
No function	Sets when the output terminal is not used.	–
FWD_R	Outputs in response to the FWD input.	0: OFF 1: ON
RVS_R	Outputs in response to the RVS input.	
HOME_R	Outputs in response to the HOME input.	
START_R	Outputs in response to the START input.	
SSTART_R	Outputs in response to the SSTART input.	
+JOG_R	Outputs in response to the +JOG input.	
–JOG_R	Outputs in response to the –JOG input.	
MS0_R to MS5_R	Outputs in response to the MS0 to MS5 input.	
FREE_R	Outputs in response to the FREE input.	
C-ON_R	Outputs in response to the C-ON input.	
STOP_R	Outputs in response to the STOP input.	
R0 to R15	Outputs the status of the general signal R0 to R15.	
M0_R to M5_R	Outputs in response to the M0 to M5 input.	
+LS_R	Outputs in response to the +LS input.	
–LS_R	Outputs in response to the –LS input.	
HOMES_R	Outputs in response to the HOMES input.	
SLIT_R	Outputs in response to the SLIT input.	
ALM	Outputs the alarm status of the driver (normally open).	0: Alarm not present 1: Alarm present
WNG	Outputs the warning status of the driver.	0: Warning not present 1: Warning present
READY	Outputs when the driver is ready.	0: Not ready 1: Ready
MOVE	Outputs while the motor operates.	0: Motor stopped 1: Motor operating
END	Outputs when the positioning operation is completed.	0: Motor operating 1: Motor operating completion

Signal name	Function	Data read
HOME-P	Outputs when the motor is in home position.	0: Not home position 1: Home position
TLC	Outputs when the load is outside of the motor torque range.	0: Inside torque range 1: Outside torque range
TIM	Outputs once every 7.2° rotation of the motor Outputs shaft.	0: OFF 1: ON
AREA1 to AREA3	Outputs when the motor is within the area.	0: Outside area 1: Inside area
S-BSY	Outputs when the driver is in internal processing state.	0: OFF 1: ON
MPS *	Outputs while the driver main power is on.	0: OFF 1: ON

* AC power input only

5 Command code list

Command codes are common to all network converters.

5-1 Group function

The driver has a group function. Multiple slaves are made into a group and a operation command is sent to all slaves in the group at once.

■ Group composition

A group consists of one parent slave and child slaves.

■ Group address

To perform a group send, set a group address to the child slaves to be included in the group.
The child slaves to which the group address has been set can receive a command sent to the parent slave.
The operation command will be sent to the child slaves in the same group by sending it to the parent slave.

- **Parent slave**

No special setting is required on the parent slave to perform a group send. The address of the parent slave becomes the group address.

- **Child slave**

Use a "group (1018h)" to set a group address to each child slave.

memo Only remote I/O input can execute the group function. Read from commands and parameters or write to commands and parameters cannot be executed.

■ Group setting

The group setting is not saved in the non-volatile memory even when the maintenance command "batch non-volatile memory write" executes.

Command code		Name	Description	Initial value
Read	Write			
24 (0018h)	4120 (1018h)	Group	Set the group address. **[Setting range]** −1: Individual (No group setting) 0 to 15: Set the group address. (Address number of parent slave) *	−1

* Set in the 0 to 11 range when using the **NETC01-CC**, and set in the 0 to 15 range when using other network converter.

■ Example for setting of the group function

Set as follows when making a group by setting the driver of address number 0 to the parent slave and by setting the driver of address number 1 and 2 to the child slaves.

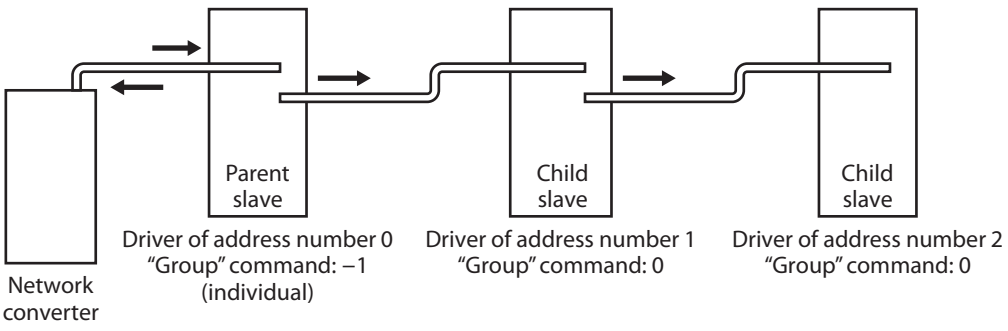

This is a timing chart for when assigning the START to NET-IN3 (remote I/O) of the driver in the group.

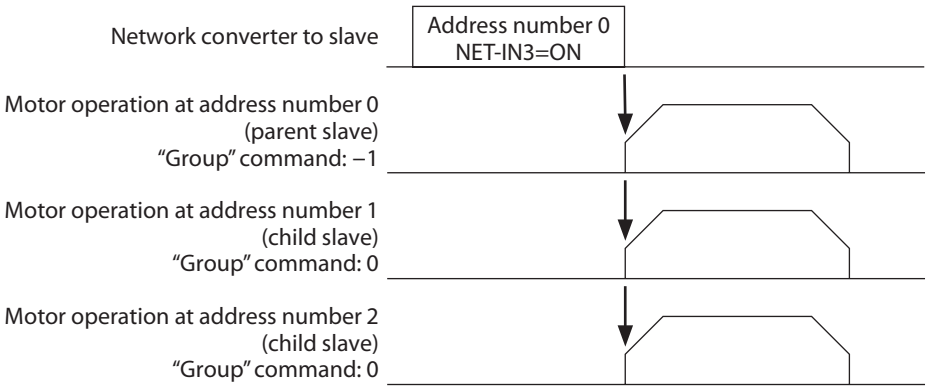

memo When inputting a remote I/O to the parent slave, the motors of the parent slave and child slaves will operate. The motors will not operate if the remote I/O is input to the child slaves.

5-2 Maintenance command

These commands are used to clear the alarm records and warning records. They are also used to execute the batch processing for the non-volatile memory.

Command code	Name	Description	Setting range
12480 (30C0h)	Reset alarm	Resets the alarms that are present. Some alarms cannot be reset with the "reset alarm."	1: Execute
12481 (30C1h)	Absolute position error alarm reset	Resets the absolute position error alarm. Since this alarm is the dedicated alarm for the absolute position error, other alarms cannot be reset.	
12482 (30C2h)	Clear alarm records	Clears alarm records.	
12483 (30C3h)	Clear warning records	Clears warning records.	
12484 (30C4h)	Clear communication error records	Clears communication error records.	
12485 (30C5h)	P-PRESET execute	Updates the command position to the value of the "preset position" parameter.	
12486 (30C6h)	Configuration	Executes the parameter recalculation and the setup.	
12487 (30C7h)	All data initialization	Resets the operation data and parameters saved in the non-volatile memory to the initial value. Note that "communication parity", "communication stop bit" and "transmission waiting time" parameters are not initialized.	
12488 (30C8h)	Batch non-volatile memory read	Reads the operation data and parameters saved in the non-volatile memory, to the RAM. All operation data and parameters previously saved in the RAM are overwritten.	
12489 (30C9h)	Batch non-volatile memory write	Writes the operation data and parameters saved in the RAM to the non-volatile memory.	

memo The non-volatile memory can be rewritten approximately 100,000 times.

5-3 Monitor command

These commands are used to monitor the driver condition.

Command code	Name	Description
8256 (2040h)	Present alarm	Monitors the present alarm code.
8257 (2041h)	Alarm record 1	Monitors the alarm records 1 to 10.
8258 (2042h)	Alarm record 2	
8259 (2043h)	Alarm record 3	
8260 (2044h)	Alarm record 4	
8261 (2045h)	Alarm record 5	
8262 (2046h)	Alarm record 6	
8263 (2047h)	Alarm record 7	
8264 (2048h)	Alarm record 8	
8265 (2049h)	Alarm record 9	
8266 (204Ah)	Alarm record 10	
8267 (204Bh)	Present warning	Monitors the present warning code.
8268 (204Ch)	Warning record 1	Monitors the warning records 1 to 10.
8269 (204Dh)	Warning record 2	
8270 (204Eh)	Warning record 3	
8271 (204Fh)	Warning record 4	
8272 (2050h)	Warning record 5	
8273 (2051h)	Warning record 6	
8274 (2052h)	Warning record 7	
8275 (2053h)	Warning record 8	
8276 (2054h)	Warning record 9	
8277 (2055h)	Warning record 10	
8279 (2057h)	Communication error code record 1	Monitors the communication error records 1 to 3 that have occurred in the past.
8280 (2058h)	Communication error code record 2	
8281 (2059h)	Communication error code record 3	

Command code	Name	Description
8282 (205Ah)	Communication error code record 4	Monitors the communication error records 4 to 10 that have occurred in the past.
8283 (205Bh)	Communication error code record 5	
8284 (205Ch)	Communication error code record 6	
8285 (205Dh)	Communication error code record 7	
8286 (205Eh)	Communication error code record 8	
8287 (205Fh)	Communication error code record 9	
8288 (2060h)	Communication error code record 10	
8289 (2061h)	Present selected data No.	Monitors the operation data No. currently selected.
8290 (2062h)	Present operation data No.	Monitors the operation data No. corresponding to the data used in the current positioning operation. This address is used in linked-motion operation and sequential positioning operation. While the motor is stopped, the last used operation data number is indicated.
8291 (2063h)	Command position	Monitors the command position.
8292 (2064h)	Command speed	Monitors the current command speed. (r/min)
8294 (2066h)	Actual position	Monitors the actual position.
8295 (2067h)	Actual speed	Monitors the actual speed. (r/min)
8297 (2069h)	Remaining dwell time	Monitors how much of the dwell time used in the linked-motion 2 operation remains.
8298 (206Ah)	Direct I/O and electromagnetic brake status	Monitors the each direct I/O signal and electromagnetic brake status. See the following table for the assignments.

■ Direct I/O and electromagnetic brake status [8298 (206Ah)]

Byte	bit7	bit6	bit5	bit4	bit3	bit2	bit1	bit0
0	IN1	IN0	–	–	SLIT	HOMES	–LS	+LS
1	–	–	IN7	IN6	IN5	IN4	IN3	IN2
2	–	–	OUT5	OUT4	OUT3	OUT2	OUT1	OUT0
3	–	–	–	–	–	–	–	MB

5-4 Operation data

Up to 64 operation data can be set (data Nos.0 to 63).
When the operation data is changed, a recalculation and setup will be performed after the operation is stopped and the changed value will be set.

Command code		Name	Setting range	Initial value
Read	Write			
512 (0200h) to 575 (023Fh)	4608 (1200h) to 4671 (123Fh)	Position No.0 to Position No.63	–8,388,608 to 8,388,607 step	0
576 (0240h) to 639 (027Fh)	4672 (1240h) to 4735 (127Fh)	Operating speed No.0 to Operating speed No.63	0 to 1,000,000 Hz	1000
640 (0280h) to 703 (02BFh)	4736 (1280h) to 4799 (12BFh)	Operation mode No.0 to Operation mode No.63	0: Incremental 1: Absolute	0
704 (02C0h) to 767 (02FFh)	4800 (12C0h) to 4863 (12FFh)	Operation function No.0 to Operation function No.63	0: Single-motion 1: Linked-motion 2: Linked-motion 2 3: Push	0
768 (0300h) to 831 (033Fh)	4864 (1300h) to 4927 (133Fh)	Acceleration No.0 to Acceleration No.63	1 to 1,000,000 (1=0.001 ms/kHz or 1=0.001 s) *1 *2	1000
832 (0340h) to 895 (037Fh)	4928 (1340h) to 4991 (137Fh)	Deceleration No.0 to Deceleration No.63	1 to 1,000,000 (1=0.001 ms/kHz or 1=0.001 s) *1 *2	1000
896 (0380h) to 959 (03BFh)	4992 (1380h) to 5055 (13BFh)	Push current No.0 to Push current No.63	0 to 1000 (1=0.1%) *3	200
960 (03C0h) to 1023 (03FFh)	5056 (13C0h) to 5119 (13FFh)	Sequential positioning No.0 to Sequential positioning No.63	0: Disable 1: Enable	0
1024 (0400h) to 1087 (043Fh)	5120 (1400h) to 5183 (143Fh)	Dwell time No.0 to Dwell time No.63	0 to 50000 (1=0.001 s)	0

*1 This item is effective when the “acceleration/deceleration type” parameter is set to “separate.” If this parameter is set to “common”, the values of the "common acceleration” and "common deceleration” parameters will be used (initial value: separate).
*2 Acceleration/deceleration rate (ms/kHz) or acceleration/deceleration time (s) can be selected using "acceleration/deceleration unit" parameter. (initial value: acceleration/deceleration rate).
*3 For the driver which is before the specification change, the setting range is 0 to 500 (1=0.1%). Refer to p.7 for details.

5-5 User parameters

The parameters are saved in the RAM or non-volatile memory. The data saved in the RAM will be erased once the DC power is turned off. On the other hand, the parameters saved in the non-volatile memory will be retained even after the DC power supply is turned off.
When turning the driver DC power ON, the parameters saved in the non-volatile memory will be sent to the RAM. Then, the recalculation and setup for the parameters are executed in the RAM.

The parameters are written in the RAM area when setting via industrial network. To save the parameters written in the RAM to non-volatile memory, execute the "batch non-volatile memory write" of the maintenance command.
The parameters set with the **MEXE02** will be saved in the non-volatile memory if "data writing" is performed.

When a parameter is changed, the timing to enable the new value varies depending on the parameter. See the following three types.

Update timing		Description
A	Immediately	Executes the recalculation and setup immediately when writing the parameter.
B	After stopping the operation	Executes the recalculation and setup after stopping the operation.
C	After executing the configuration or after cycling the power	Executes the recalculation and setup after executing the configuration or turning the DC power ON again.

In this chapter, each update timing is represented in A to C.

memo

- The parameters are written in the RAM area when setting via industrial network. If parameters, which are required turning on the power again in order to update, are changed, be sure to save them in the non-volatile memory before turning off the power.
- The non-volatile memory can be rewritten approximately 100,000 times.

■ I/O parameter

Command code		Description	Setting range	Initial value	Effective (p.300)
READ	WRITE				
256 (0100h)	4352 (1100h)	STOP input action	0: Immediate stop 1: Deceleration stop 2: Immediate stop & Current OFF 3: Deceleration stop & Current OFF	1	A
257 (0101h)	4353 (1101h)	Hardware overtravel	0: Disable 1: Enable	1	
258 (0102h)	4354 (1102h)	Overtravel action	0: Immediate stop 1: Deceleration stop	0	
259 (0103h)	4355 (1103h)	END signal range	0 to 180 (1=0.1°)	18	
260 (0104h)	4356 (1104h)	Position complete output offset	−18 to 18 (1=0.1°)	0	
261 (0105h)	4357 (1105h)	AREA1 positive direction position	−8,388,608 to 8,388,607 step	0	
262 (0106h)	4358 (1106h)	AREA1 negative direction position			
263 (0107h)	4359 (1107h)	AREA2 positive direction position			
264 (0108h)	4360 (1108h)	AREA2 negative direction position			

Command code		Description	Setting range	Initial value	Effective (p.300)
READ	WRITE				
265 (0109h)	4361 (1109h)	AREA3 positive direction position	−8,388,608 to 8,388,607 step	0	A
266 (010Ah)	4362 (110Ah)	AREA3 negative direction position			
267 (010Bh)	4363 (110Bh)	Minimum ON time for MOVE output	0 to 255 ms	0	
268 (010Ch)	4364 (110Ch)	LS contact configration	0: Make (N.O.) 1: Brake (N.C.)	0	C
269 (010Dh)	4365 (110Dh)	HOMES logic level			
270 (010Eh)	4366 (110Eh)	SLIT logic level			
2048 (0800h)	6144 (1800h)	MS0 operation No. selection	0 to 63	0	B
2049 (0801h)	6145 (1801h)	MS1 operation No. selection		1	
2050 (0802h)	6146 (1802h)	MS2 operation No. selection		2	
2051 (0803h)	6147 (1803h)	MS3 operation No. selection		3	
2052 (0804h)	6148 (1804h)	MS4 operation No. selection		4	
2053 (0805h)	6149 (1805h)	MS5 operation No. selection		5	
2054 (0806h)	6150 (1806h)	HOME-P output function selection	0: Home output 1: Return-to-home complete output	0	A

■ Motor parameter

Command code		Description	Setting range	Initial value	Effective (p.300)
READ	WRITE				
288 (0120h)	4384 (1120h)	RUN current	0 to 1000 (1=0.1%)	1000	A
289 (0121h)	4385 (1121h)	STOP current	0 to 500 (1=0.1%)	500	
290 (0122h)	4386 (1122h)	Position loop gain	1 to 50	10	
291 (0123h)	4387 (1123h)	Speed loop gain	10 to 200	180	
292 (0124h)	4388 (1124h)	Speed loop integral time constant	100 to 2000 (1=0.1 ms)	1000	
293 (0125h)	4389 (1125h)	Speed filter	0 to 200 ms	1	B
294 (0126h)	4390 (1126h)	Moving average time	1 to 200 ms	1	
2064 (0810h)	6160 (1810h)	Filter selection	0: Speed filter 1: Moving average filter	0	C
2065 (0811h)	6161 (1811h)	Speed difference gain 1	0 to 500	45	A
2066 (0812h)	6162 (1812h)	Speed difference gain 2	0 to 500	45	

Command code		Description	Setting range	Initial value	Effective (p.300)
READ	WRITE				
2067 (0813h)	6163 (1813h)	Control mode	0: Normal mode 1: Current control mode	0	C
2068 (0814h)	6164 (1814h)	Smooth drive	0: Disable 1: Enable	1	

■ Operation parameter

Command code		Description	Setting range	Initial value	Effective (p.300)
READ	WRITE				
320 (0140h)	4416 (1140h)	Common acceleration	1 to 1,000,000 (1=0.001 ms/kHz or 1=0.001 s) *	1000	B
321 (0141h)	4417 (1141h)	Common deceleration	1 to 1,000,000 (1=0.001 ms/kHz or 1=0.001 s) *	1000	
322 (0142h)	4418 (1142h)	Starting speed	0 to 1,000,000 Hz	500	
323 (0143h)	4419 (1143h)	JOG operating speed	1 to 1,000,000 Hz	1000	
324 (0144h)	4420 (1144h)	Acceleration/deceleration rate of JOG	1 to 1,000,000 (1=0.001 ms/kHz or 1=0.001 s) *	1000	
325 (0145h)	4421 (1145h)	JOG starting speed	0 to 1,000,000 Hz	500	
326 (0146h)	4422 (1146h)	Acceleration/deceleration type	0: Common 1: Separate	1	
327 (0147h)	4423 (1147h)	Acceleration/deceleration unit	0: ms/kHz 1: s	0	C
2080 (0820h)	6176 (1820h)	Automatic return operation	0: Disable 1: Enable	0	
2081 (0821h)	6177 (1821h)	Operation speed of automatic return	1 to 1,000,000 Hz	1000	B
2082 (0822h)	6178 (1822h)	Acceleration (deceleration) of automatic return	1 to 1,000,000 (1=0.001 ms/kHz or 1=0.001 s) *	1000	
2083 (0823h)	6179 (1823h)	Starting speed of automatic return	0 to 1,000,000 Hz	500	
2084 (0824h)	6180 (1824h)	JOG travel amount	1 to 8,388,607 step	1	

* Acceleration/deceleration rate (ms/kHz) or acceleration/deceleration time (s) can be selected using "acceleration/deceleration unit" parameter. (initial value: acceleration/deceleration rate).

■ Home operation parameter

Command code		Description	Setting range	Initial value	Effective (p.300)
READ	WRITE				
352 (0160h)	4448 (1160h)	Home-seeking mode	0: 2-sensor mode 1: 3-sensor mode 2: Push mode	1	B
353 (0161h)	4449 (1161h)	Operating speed of home-seeking	1 to 1,000,000 Hz	1000	
354 (0162h)	4450 (1162h)	Acceleration/deceleration of home-seeking	1 to 1,000,000 (1=0.001 ms/kHz or 1=0.001 s) *	1000	
355 (0163h)	4451 (1163h)	Starting speed of home-seeking	1 to 1,000,000 Hz	500	
356 (0164h)	4452 (1164h)	Position offset of home-seeking	−8,388,608 to 8,388,607 step	0	

Command code		Description	Setting range	Initial value	Effective (p.300)
READ	WRITE				
357 (0165h)	4453 (1165h)	Starting direction of home-seeking	0: Negative direction 1: Positive direction	1	B
358 (0166h)	4454 (1166h)	SLIT detection with home-seeking	0: Disable 1: Enable	0	
359 (0167h)	4455 (1167h)	TIM signal detection with home-seeking	0: Disable 1: Enable	0	
360 (0168h)	4456 (1168h)	Operating current of home-seeking with push-motion	0 to 1000 (1=0.1%)	1000	

* Acceleration/deceleration rate (ms/kHz) or acceleration/deceleration time (s) can be selected using "acceleration/deceleration unit" parameter. (initial value: acceleration/deceleration rate).

■ Alarm parameter

Command code		Description	Setting range	Initial value	Effective (p.300)
READ	WRITE				
384 (0180h)	4480 (1180h)	Overload alarm	1 to 300 (1=0.1 s)	50	A
385 (0181h)	4481 (1181h)	Excessive position deviation alarm at current ON	1 to 30000 (1=0.01 rev)	300	
388 (0184h)	4484 (1184h)	Return-to-home incomplete alarm	0: Disable 1: Enable	0	C
2112 (0840h)	6208 (1840h)	Excessive position deviation alarm at current OFF	1 to 30000 (1=0.01 rev)	10000	A

■ Warning parameter

Command code		Description	Setting range	Initial value	Effective (p.300)
READ	WRITE				
416 (01A0h)	4512 (11A0h)	Overheat warning	40 to 85 °C	85	A
417 (01A1h)	4513 (11A1h)	Overload warning	1 to 300 (1=0.1 s)	50	
418 (01A2h)	4514 (11A2h)	Overspeed warning	1 to 5000 r/min	4500	
419 (01A3h)	4515 (11A3h)	Overvoltage warning	• AC power input: 120 to 450 V • DC power input: 150 to 630 (1=0.1 V)	AC power input: 435 DC power input: 630	
420 (01A4h)	4516 (11A4h)	Undervoltage warning	• AC power input: 120 to 280 V • DC power input: 150 to 630 (1=0.1 V)	AC power input: 120 DC power input: 180	
421 (01A5h)	4517 (11A5h)	Excessive position deviation warning at current ON	1 to 30000 (1=0.01 rev)	300	

■ Coordinates parameter

Command code		Description	Setting range	Initial value	Effective (p.300)
READ	WRITE				
448 (01C0h)	4544 (11C0h)	Electronic gear A	1 to 65535	1	C
449 (01C1h)	4545 (11C1h)	Electronic gear B	1 to 65535	1	
450 (01C2h)	4546 (11C2h)	Motor rotation direction	0: Positive direction=CCW 1: Positive direction=CW	1	
451 (01C3h)	4547 (11C3h)	Software overtravel	0: Disable 1: Enable	1	A
452 (01C4h)	4548 (11C4h)	Positive software limit	–8,388,608 to 8,388,607 step	8,388,607	
453 (01C5h)	4549 (11C5h)	Negative software limit	–8,388,608 to 8,388,607 step	–8,388,608	
454 (01C6h)	4550 (11C6h)	Preset position	–8,388,608 to 8,388,607 step	0	
455 (01C7h)	4551 (11C7h)	Wrap setting	0: Disable 1: Enable	0	C
456 (01C8h)	4552 (11C8h)	Wrap setting range	1 to 8,388,607 step	1000	

■ Common parameter

Command code		Description	Setting range	Initial value	Effective (p.300)
READ	WRITE				
480 (01E0h)	4576 (11E0h)	Data setter speed display	0: Signed 1: Absolute value	0	A
481 (01E1h)	4577 (11E1h)	Data setter edit	0: Disable 1: Enable	1	
482 (01E2h)	4578 (11E2h)	Absolute back-up system	0: Disable 1: Enable	0	C

■ I/O function [Input] parameter

Command code		Description	Setting range	Initial value	Effective (p.300)
READ	WRITE				
2176 (0880h)	6272 (1880h)	IN0 input function selection	See table on next page.	3: HOME	C
2177 (0881h)	6273 (1881h)	IN1 input function selection		4: START	
2178 (0882h)	6274 (1882h)	IN2 input function selection		48: M0	
2179 (0883h)	6275 (1883h)	IN3 input function selection		49: M1	
2180 (0884h)	6276 (1884h)	IN4 input function selection		50: M2	
2181 (0885h)	6277 (1885h)	IN5 input function selection		16: FREE	
2182 (0886h)	6278 (1886h)	IN6 input function selection		18: STOP	
2183 (0887h)	6279 (1887h)	IN7 input function selection		24: ALM-RST	

Command code		Description	Setting range	Initial value	Effective (p.300)
READ	WRITE				
2192 (0890h)	6288 (1890h)	IN0 input logic level setting	0: Make (N.O) 1: Brake (N.C.)	0	C
2193 (0891h)	6289 (1891h)	IN1 input logic level setting			
2194 (0892h)	6290 (1892h)	IN2 input logic level setting			
2195 (0893h)	6291 (1893h)	IN3 input logic level setting			
2196 (0894h)	6292 (1894h)	IN4 input logic level setting			
2197 (0895h)	6293 (1895h)	IN5 input logic level setting			
2198 (0896h)	6294 (1896h)	IN6 input logic level setting			
2199 (0897h)	6295 (1897h)	IN7 input logic level setting			

Setting range for IN input function selection

0: No function	8: MS0	18: STOP	35: R3	43: R11	51: M3
1: FWD	9: MS1	24: ALM-RST	36: R4	44: R12	52: M4
2: RVS	10: MS2	25: P-PRESET	37: R5	45: R13	53: M5
3: HOME	11: MS3	26: P-CLR	38: R6	46: R14	
4: START	12: MS4	27: HMI	39: R7	47: R15	
5: SSTART	13: MS5	32: R0	40: R8	48: M0	
6: +JOG	16: FREE	33: R1	41: R9	49: M1	
7: –JOG	17: C-ON	34: R2	42: R10	50: M2	

■ I/O function [Output] parameter

Command code		Description	Setting range	Initial value	Effective (p.300)
READ	WRITE				
2208 (08A0h)	6304 (18A0h)	OUT0 output function selection	See table next.	70: HOME-P	C
2209 (08A1h)	6305 (18A1h)	OUT1 output function selection		69: END	
2210 (08A2h)	6306 (18A2h)	OUT2 output function selection		73: AREA1	
2211 (08A3h)	6307 (18A3h)	OUT3 output function selection		67: READY	
2212 (08A4h)	6308 (18A4h)	OUT4 output function selection		66: WNG	
2213 (08A5h)	6309 (18A5h)	OUT5 output function selection		65: ALM	

Setting range for OUT output function selection

0: No function	10: MS2_R	35: R3	45: R13	61: –LS_R	72: TIM
1: FWD_R	11: MS3_R	36: R4	46: R14	62: HOMES_R	73: AREA1
2: RVS_R	12: MS4_R	37: R5	47: R15	63: SLIT_R	74: AREA2
3: HOME_R	13: MS5_R	38: R6	48: M0_R	65: ALM	75: AREA3
4: START_R	16: FREE_R	39: R7	49: M1_R	66: WNG	80: S-BSY
5: SSTART_R	17: C-ON_R	40: R8	50: M2_R	67: READY	82: MPS *
6: +JOG_R	18: STOP_R	41: R9	51: M3_R	68: MOVE	
7: –JOG_R	32: R0	42: R10	52: M4_R	69: END	
8: MS0_R	33: R1	43: R11	53: M5_R	70: HOME-P	
9: MS1_R	34: R2	44: R12	60: +LS_R	71: TLC	

* AC power input only.

■ I/O function [RS-485] parameter

Command code		Description	Setting range	Initial value	Effective (p.300)
READ	WRITE				
2224 (08B0h)	6320 (18B0h)	NET-IN0 input function selection	See table on p.307.	48: M0	C
2225 (08B1h)	6321 (18B1h)	NET-IN1 input function selection		49: M1	
2226 (08B2h)	6322 (18B2h)	NET-IN2 input function selection		50: M2	
2227 (08B3h)	6323 (18B3h)	NET-IN3 input function selection		4: START	
2228 (08B4h)	6324 (18B4h)	NET-IN4 input function selection		3: HOME	
2229 (08B5h)	6325 (18B5h)	NET-IN5 input function selection		18: STOP	
2230 (08B6h)	6326 (18B6h)	NET-IN6 input function selection		16: FREE	
2231 (08B7h)	6327 (18B7h)	NET-IN7 input function selection		0: No function	
2232 (08B8h)	6328 (18B8h)	NET-IN8 input function selection		8: MS0	
2233 (08B9h)	6329 (18B9h)	NET-IN9 input function selection		9: MS1	
2234 (08BAh)	6330 (18BAh)	NET-IN10 input function selection		10: MS2	
2235 (08BBh)	6331 (18BBh)	NET-IN11 input function selection		5: SSTART	
2236 (08BCh)	6332 (18BCh)	NET-IN12 input function selection		6: +JOG	
2237 (08BDh)	6333 (18BDh)	NET-IN13 input function selection		7: –JOG	
2238 (08BEh)	6334 (18BEh)	NET-IN14 input function selection		1: FWD	
2239 (08BFh)	6335 (18BFh)	NET-IN15 input function selection		2: RVS	
2240 (08C0h)	6336 (18C0h)	NET-OUT0 output function selection	See table on p.307.	48: M0_R	C
2241 (08C1h)	6337 (18C1h)	NET-OUT1 output function selection		49: M1_R	
2242 (08C2h)	6338 (18C2h)	NET-OUT2 output function selection		50: M2_R	
2243 (08C3h)	6339 (18C3h)	NET-OUT3 output function selection		4: START_R	
2244 (08C4h)	6340 (18C4h)	NET-OUT4 output function selection		70: HOME-P	
2245 (08C5h)	6341 (18C5h)	NET-OUT5 output function selection		67: READY	
2246 (08C6h)	6342 (18C6h)	NET-OUT6 output function selection		66: WNG	
2247 (08C7h)	6343 (18C7h)	NET-OUT7 output function selection		65: ALM	
2248 (08C8h)	6344 (18C8h)	NET-OUT8 output function selection		80: S-BSY	
2249 (08C9h)	6345 (18C9h)	NET-OUT9 output function selection		73: AREA1	

Command code		Description	Setting range	Initial value	Effective (p.300)
READ	WRITE				
2250 (08CAh)	6346 (18CAh)	NET-OUT10 output function selection	See table next.	74: AREA2	C
2251 (08CBh)	6347 (18CBh)	NET-OUT11 output function selection		75: AREA3	
2252 (08CCh)	6348 (18CCh)	NET-OUT12 output function selection		72: TIM	
2253 (08CDh)	6349 (18CDh)	NET-OUT13 output function selection		68: MOVE	
2254 (08CEh)	6350 (18CEh)	NET-OUT14 output function selection		69: END	
2255 (08CFh)	6351 (18CFh)	NET-OUT15 output function selection		71: TLC	

- **Setting range for NET-IN input function selection**

0: No function	8: MS0	18: STOP	35: R3	43: R11	51: M3
1: FWD	9: MS1	24: ALM-RST *	36: R4	44: R12	52: M4
2: RVS	10: MS2	25: P-PRESET *	37: R5	45: R13	53: M5
3: HOME	11: MS3	26: P-CLR *	38: R6	46: R14	
4: START	12: MS4	27: HMI	39: R7	47: R15	
5: SSTART	13: MS5	32: R0	40: R8	48: M0	
6: +JOG	16: FREE	33: R1	41: R9	49: M1	
7: −JOG	17: C-ON	34: R2	42: R10	50: M2	

* These three signals cannot be set in the driver which is before the specification change. Refer to p.7 for details.

- **Setting range for NET-OUT output function selection**

0: No function	10: MS2_R	35: R3	45: R13	61: −LS_R	72: TIM
1: FWD_R	11: MS3_R	36: R4	46: R14	62: HOMES_R	73: AREA1
2: RVS_R	12: MS4_R	37: R5	47: R15	63: SLIT_R	74: AREA2
3: HOME_R	13: MS5_R	38: R6	48: M0_R	65: ALM	75: AREA3
4: START_R	16: FREE_R	39: R7	49: M1_R	66: WNG	80: S-BSY
5: SSTART_R	17: C-ON_R	40: R8	50: M2_R	67: READY	82: MPS *
6: +JOG_R	18: STOP_R	41: R9	51: M3_R	68: MOVE	
7: −JOG_R	32: R0	42: R10	52: M4_R	69: END	
8: MS0_R	33: R1	43: R11	53: M5_R	70: HOME-P	
9: MS1_R	34: R2	44: R12	60: +LS_R	71: TLC	

* AC power input only.

■ Communication parameter

Command code		Description	Setting range	Initial value	Effective (p.300)
READ	WRITE				
2304 (0900h)	6400 (1900h)	Communication timeout	0: Not monitored 1 to 10000 ms	0	A
2305 (0901h)	6401 (1901h)	Communication error alarm	1 to 10 times	3	

8 Appendix

◆Table of contents

1 Timing charts.....310

2 Specifications 321

3 General specifications 322

3-1 AC power input 322

3-2 DC power input 323

4 Regulations and standards.....324

4-1 UL Standards 324

4-2 EU Directives.....324

4-3 Republic of Korea, Radio Waves Act.....325

4-4 RoHS Directive 325

1 Timing charts

■ Power supply input (AC power input)

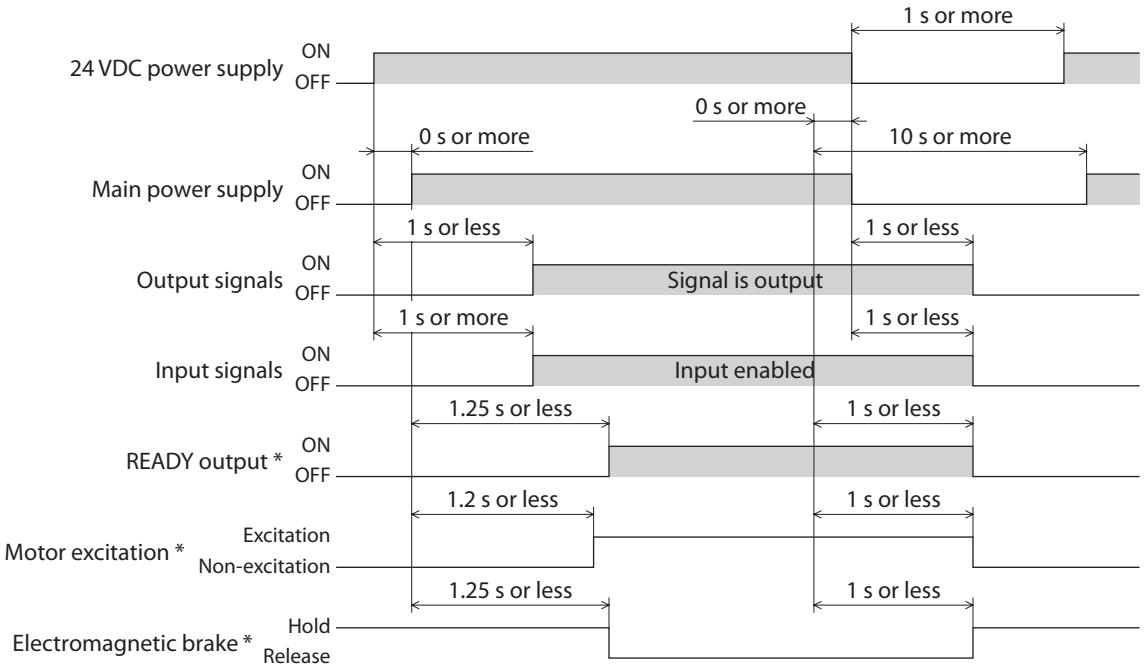

* When the C-ON input is not assigned or when the C-ON input is assigned as normally closed.

■ Power supply input (DC power input)

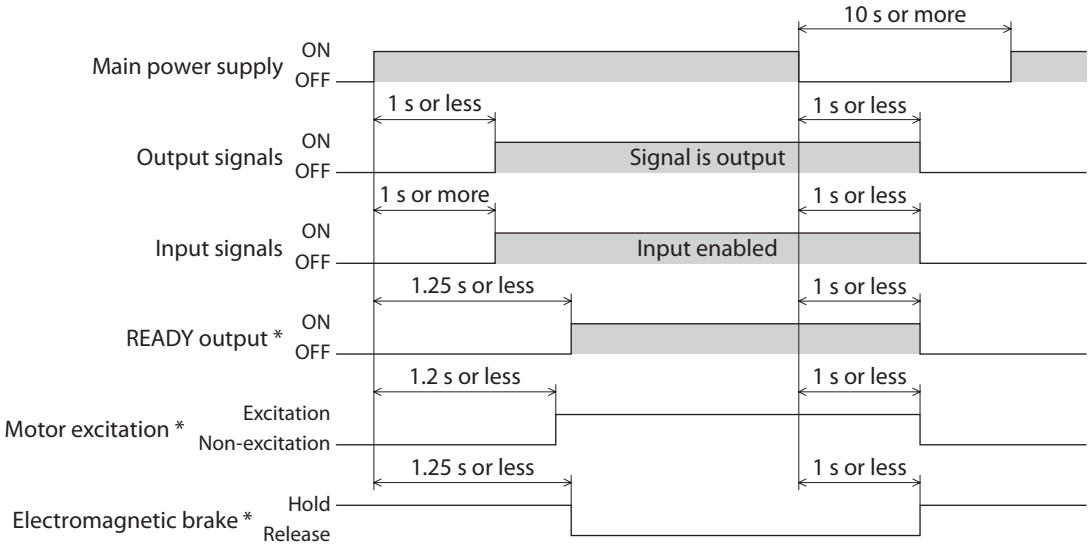

* When the C-ON input is not assigned or when the C-ON input is assigned as normally closed.

■ C-ON input

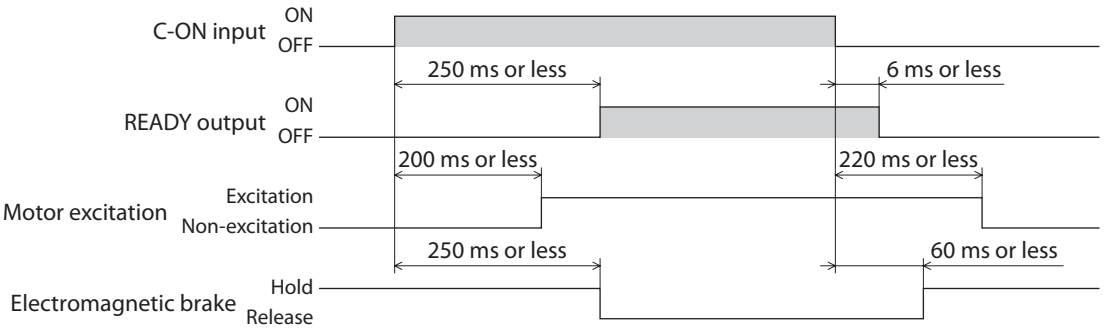

■ STOP input

- **When the "STOP input action" parameter is "immediate stop."**

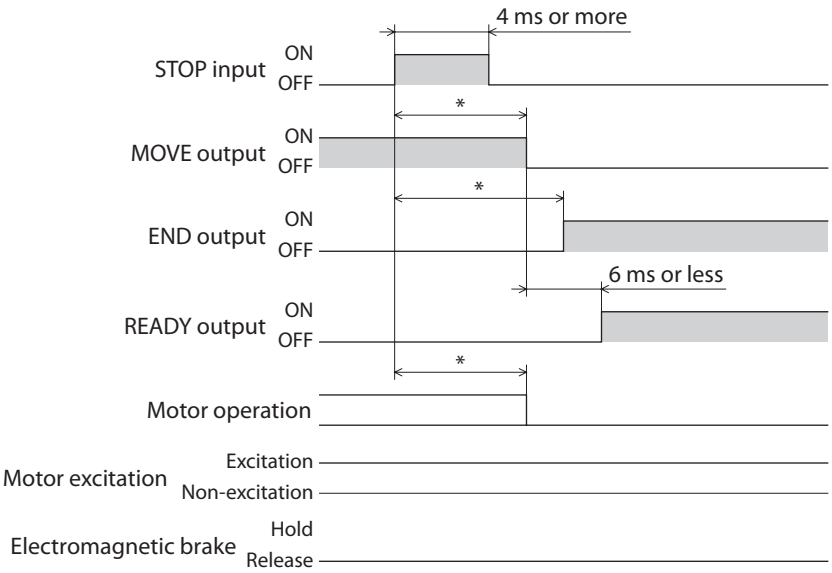

* The specific time varies depending on the load, operating speed, speed filter and other.

- **When the "STOP input action" parameter is "deceleration stop."**

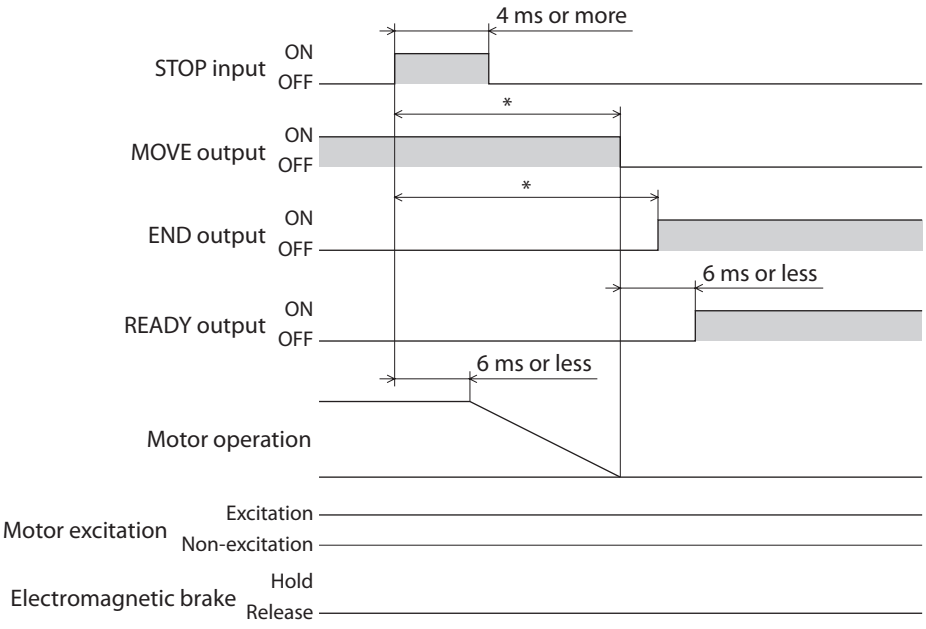

* The specific time varies depending on the load, operating speed, speed filter and other.

- **When the "STOP input action" parameter is "immediate stop & Current OFF."**

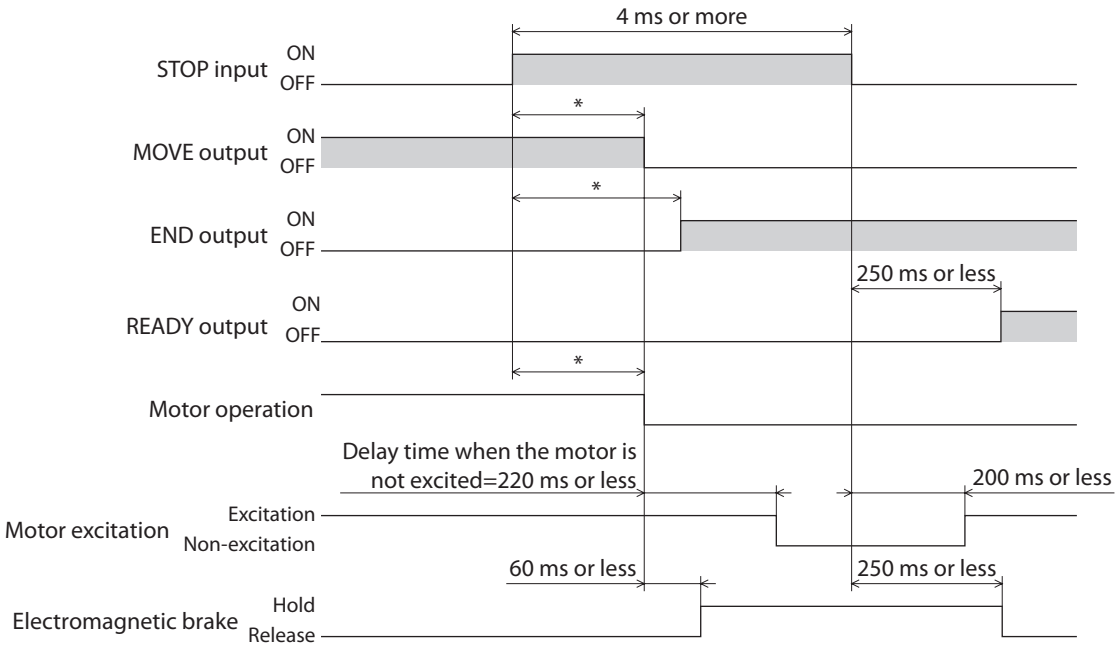

* The specific time varies depending on the load, operating speed, speed filter and other.

- **When the "STOP input action" parameter is "deceleration stop & Current OFF."**

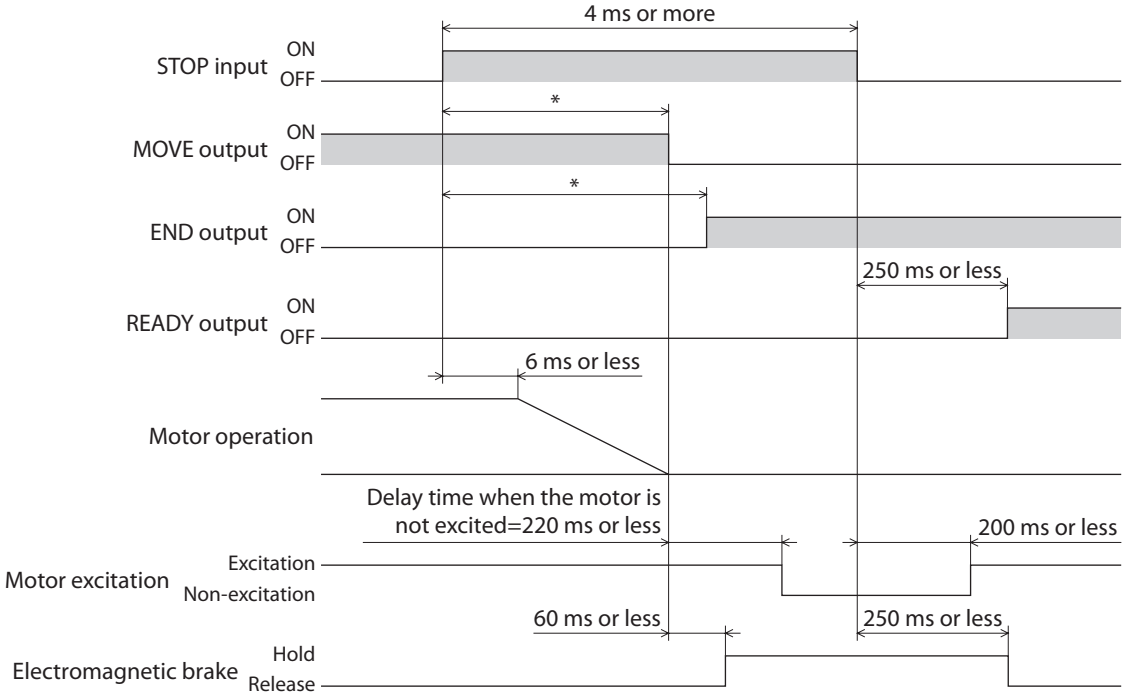

* The specific time varies depending on the load, operating speed, speed filter and other.

■ FREE input

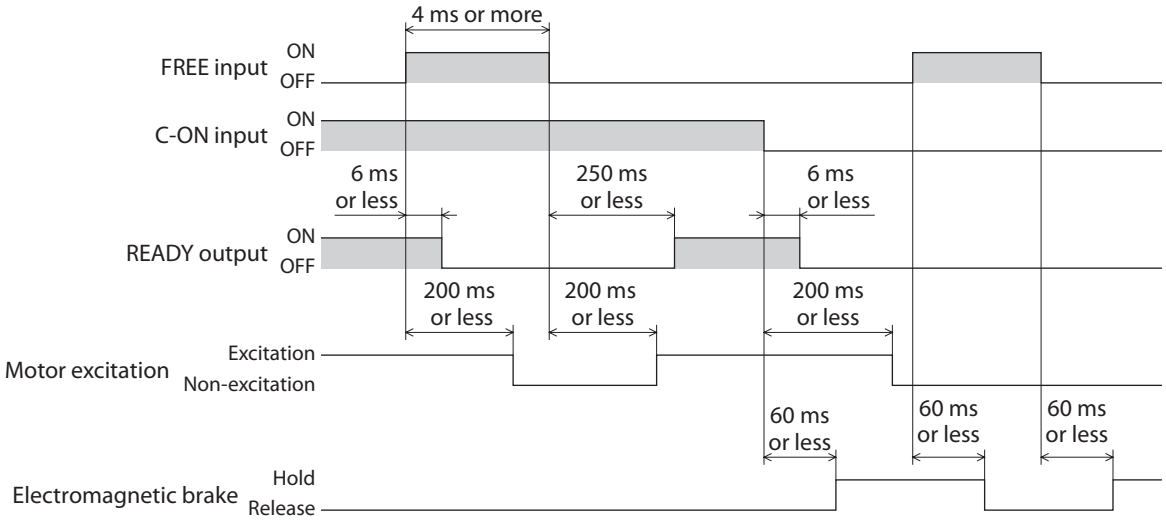

■ ALM-RST input

- **When an alarm generates and the motor maintains excitation**

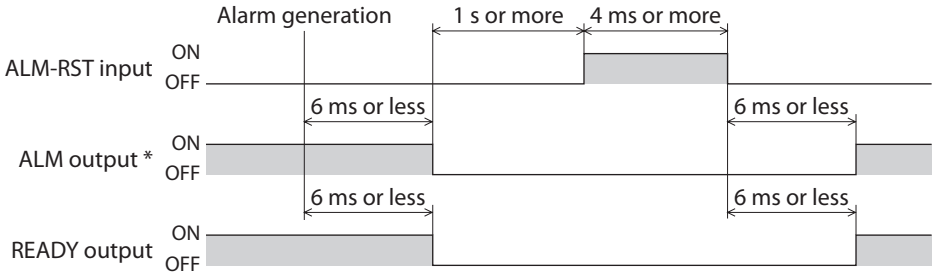

* ALM output is normally closed. It is ON during normal operation and it turns OFF when an alarm generates.

- **When an alarm generates and the motor does not maintain excitation**

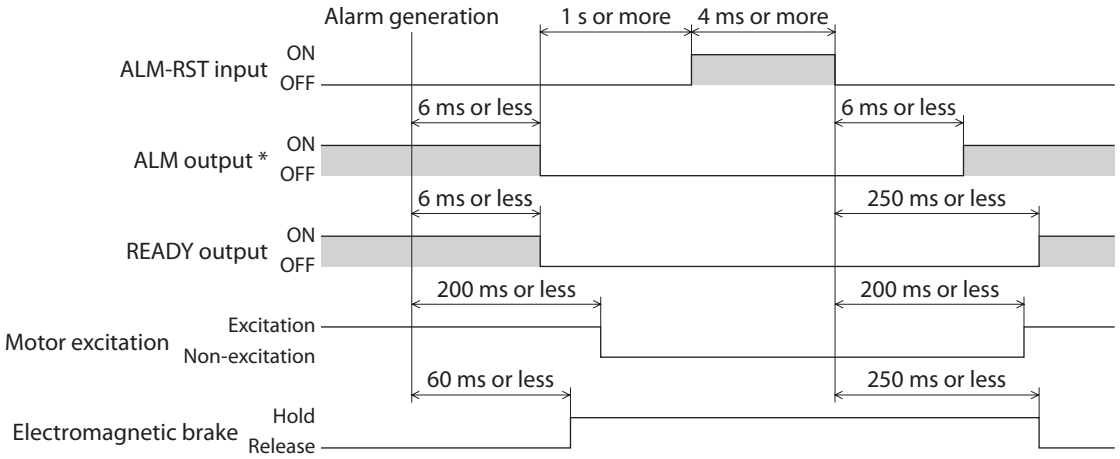

* ALM output is normally closed. It is ON during normal operation and it turns OFF when an alarm generates.

■ HMI input

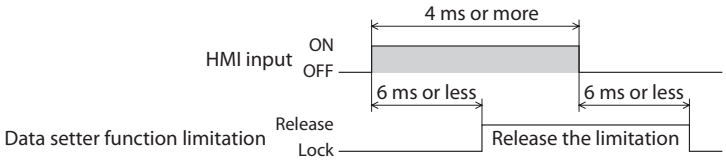

■ P-CLR input

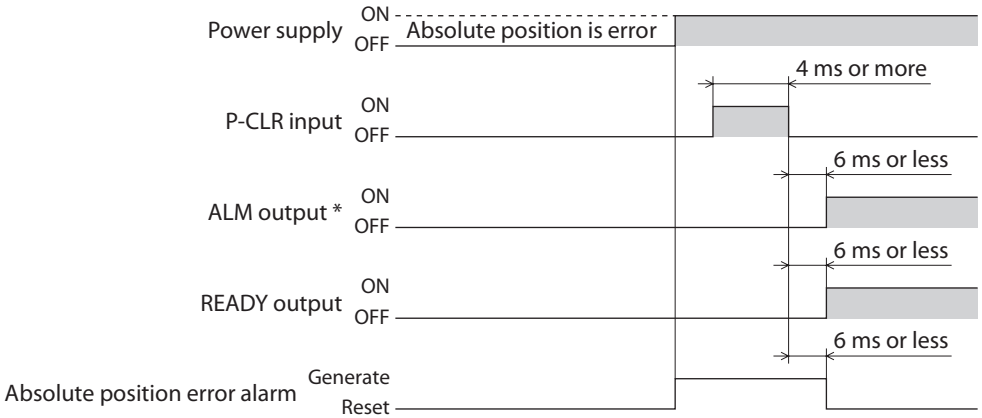

* ALM output is normally closed. It is ON during normal operation and it turns OFF when an alarm generates.

■ P-PRESET input

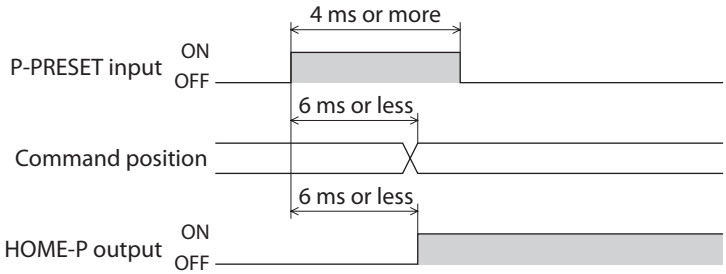

■ Single-motion operation (Positioning operation)

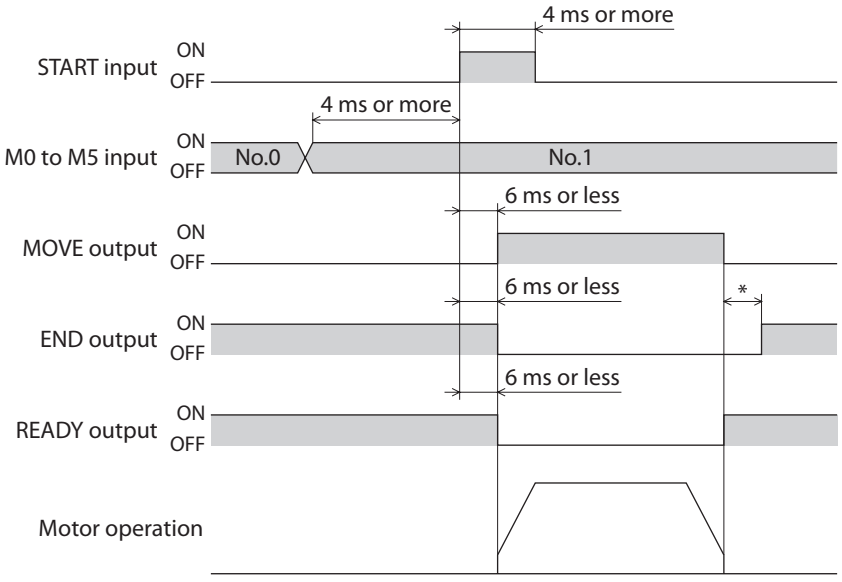

* The specific time varies depending on the load, operating speed, speed filter and other.

■ Linked-motion operation (Positioning operation)

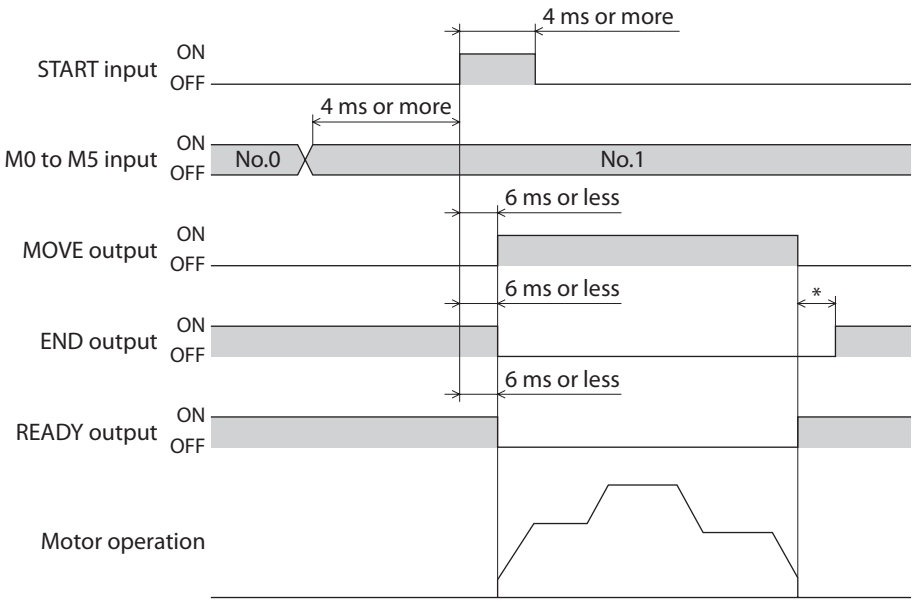

* The specific time varies depending on the load, operating speed, speed filter and other.

■ Linked-motion 2 operation (Positioning operation)

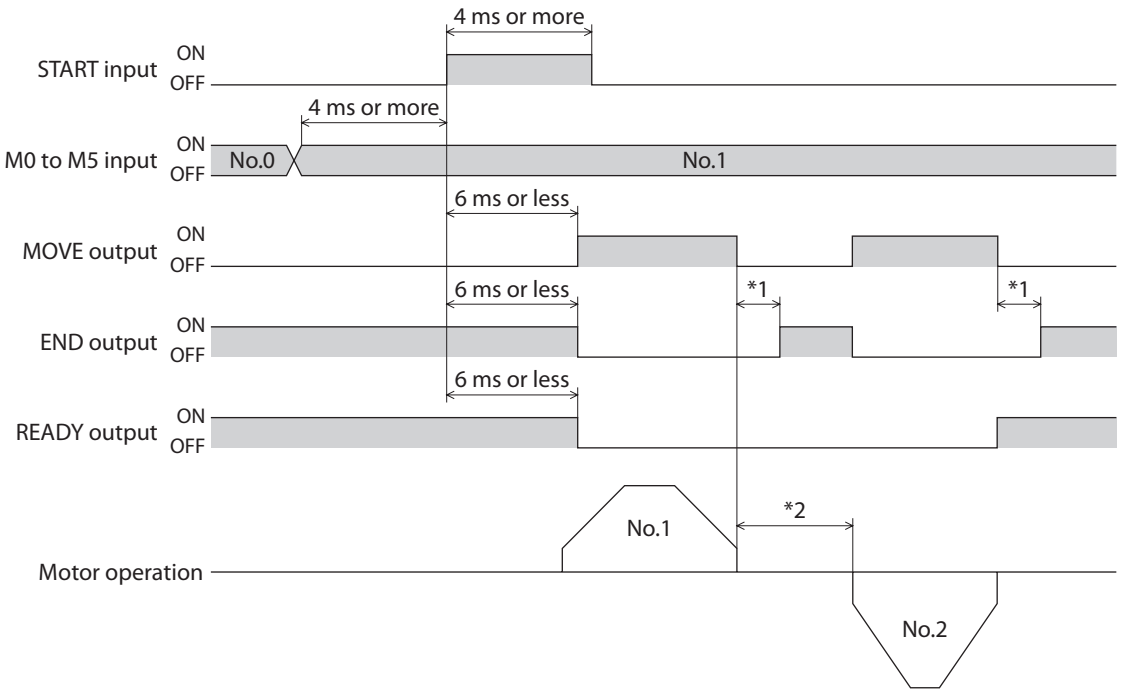

*1 The specific time varies depending on the load, operating speed, speed filter and other.
*2 This is the value of the dwell time to be set in operation data No.1.

■ Push operation

- **When the positioning operation is completed before turning to the "push-motion" status**

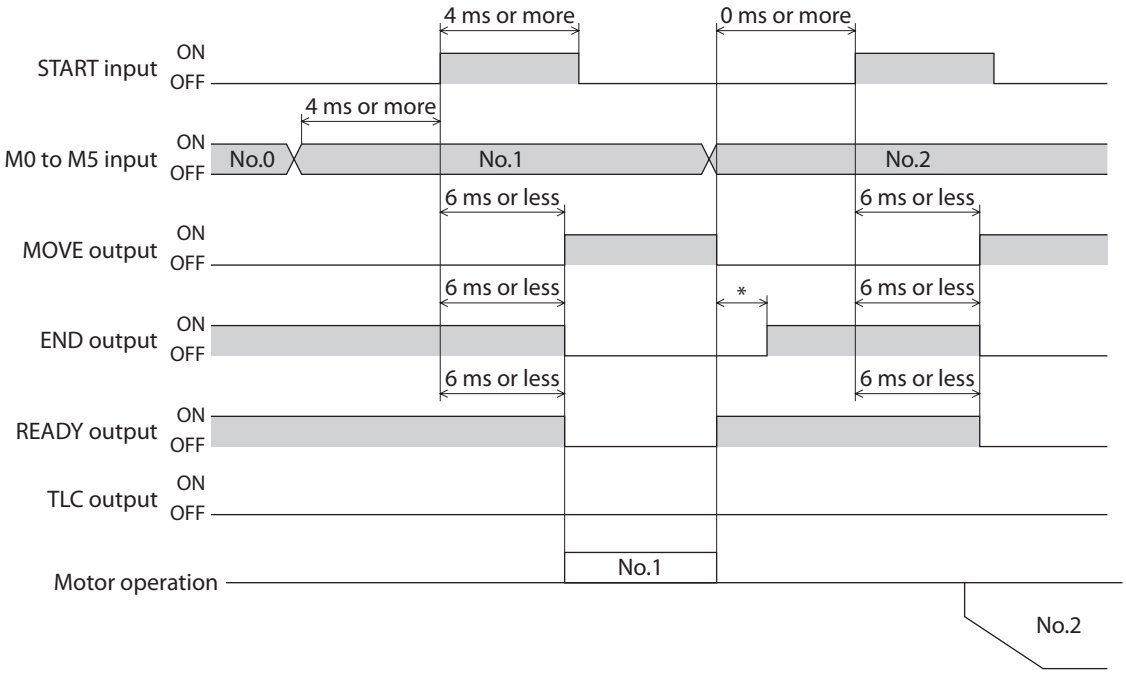

* The specific time varies depending on the load, operating speed, speed filter and other.

- **When the positioning operation is started from the "push-motion" status**

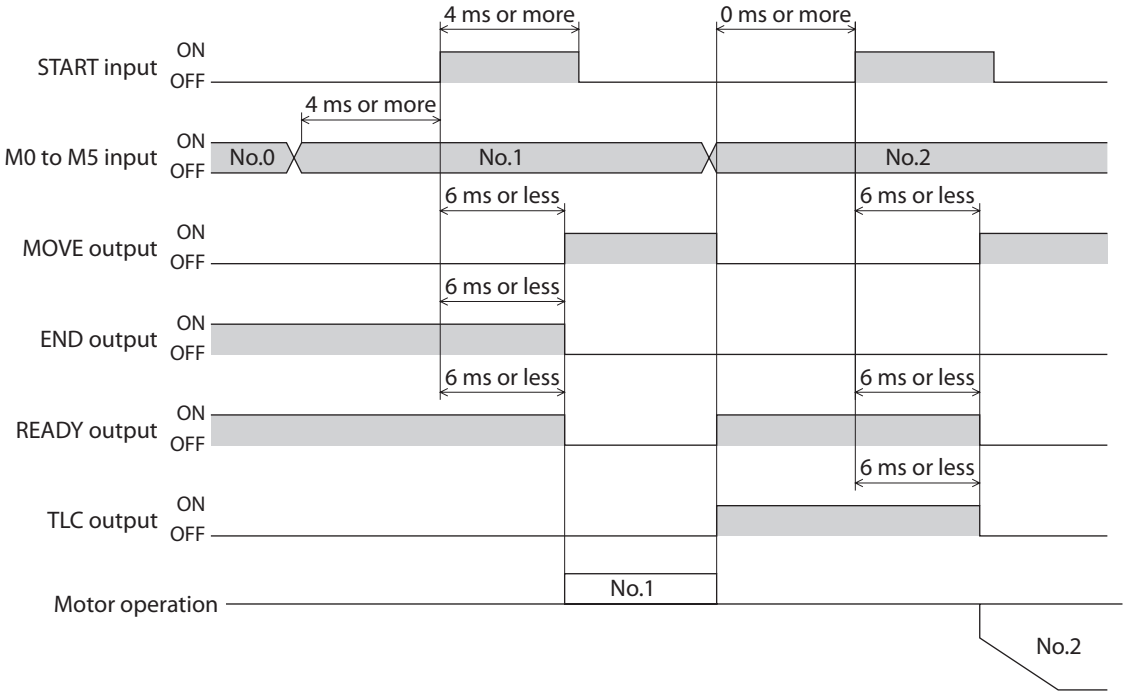

■ Direct positioning operation

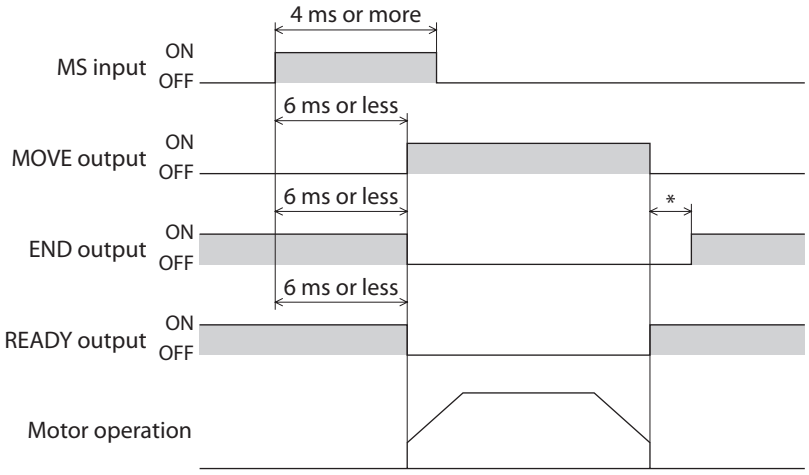

* The specific time varies depending on the load, operating speed, speed filter and other.

■ Sequential positioning operation

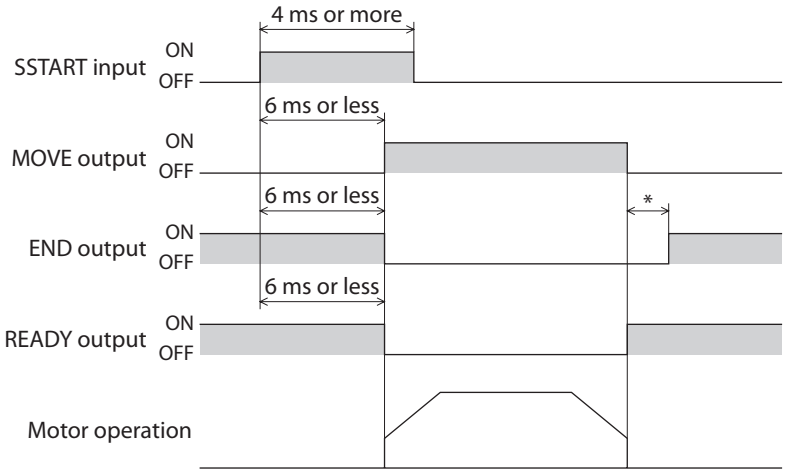

* The specific time varies depending on the load, operating speed, speed filter and other.

■ Continuous operation

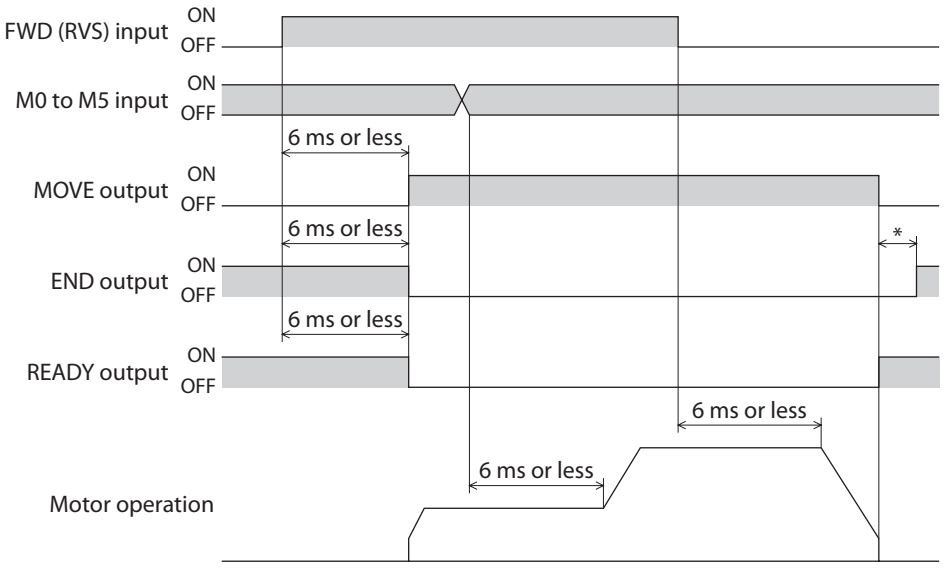

* The specific time varies depending on the load, operating speed, speed filter and other.

■ JOG operation

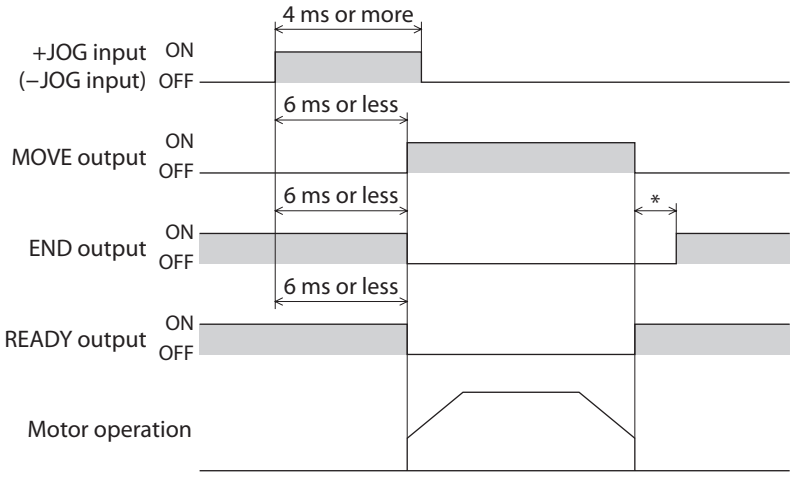

* The specific time varies depending on the load, operating speed, speed filter and other.

■ Return-to-home operation

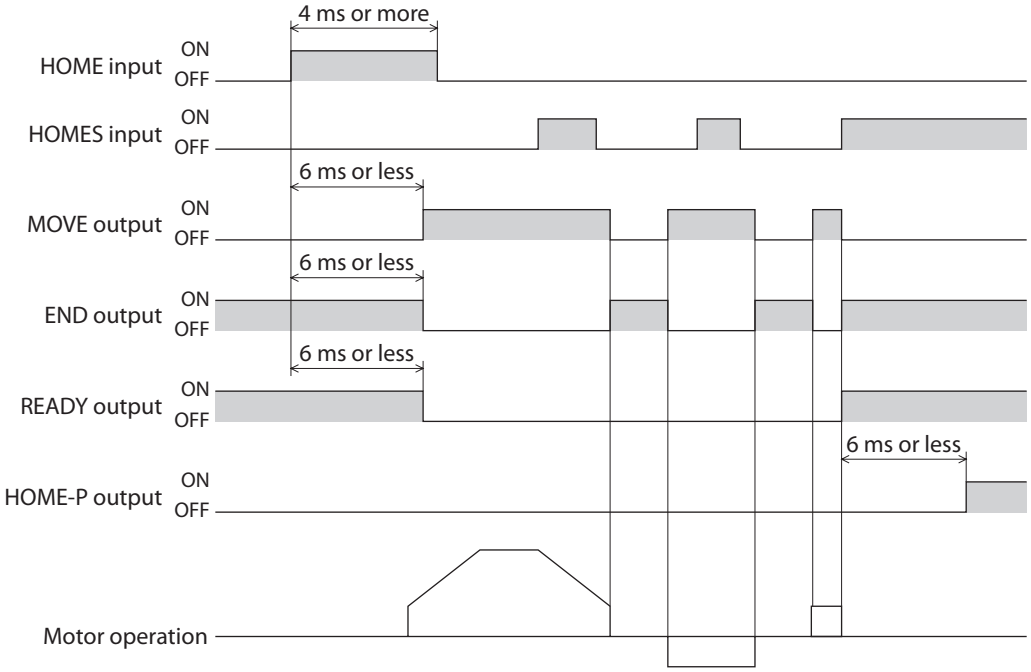

■ Automatic return operation

- **When the automatic return operation is performed using the main power supply (AC power input)**

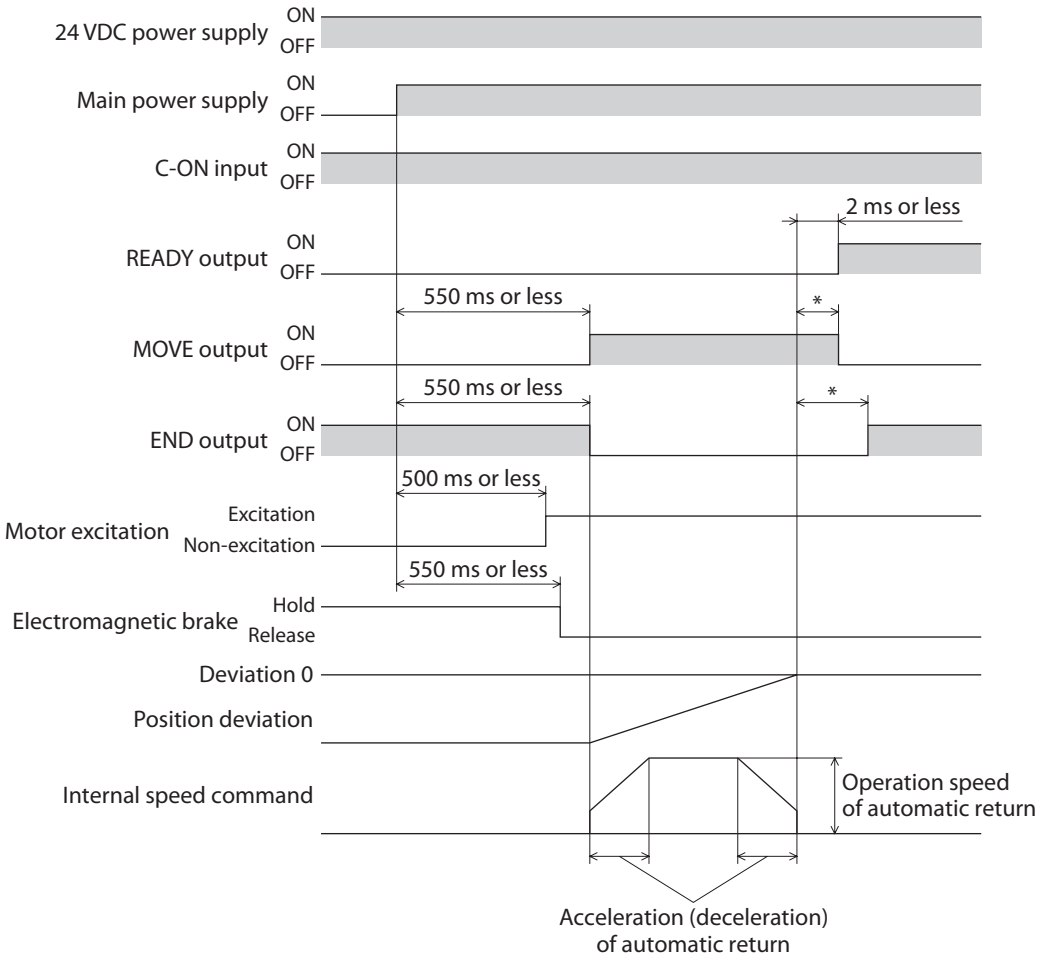

* The specific time varies depending on the load, operating speed, speed filter and other.

- **When the automatic return operation is performed using the C-ON input**

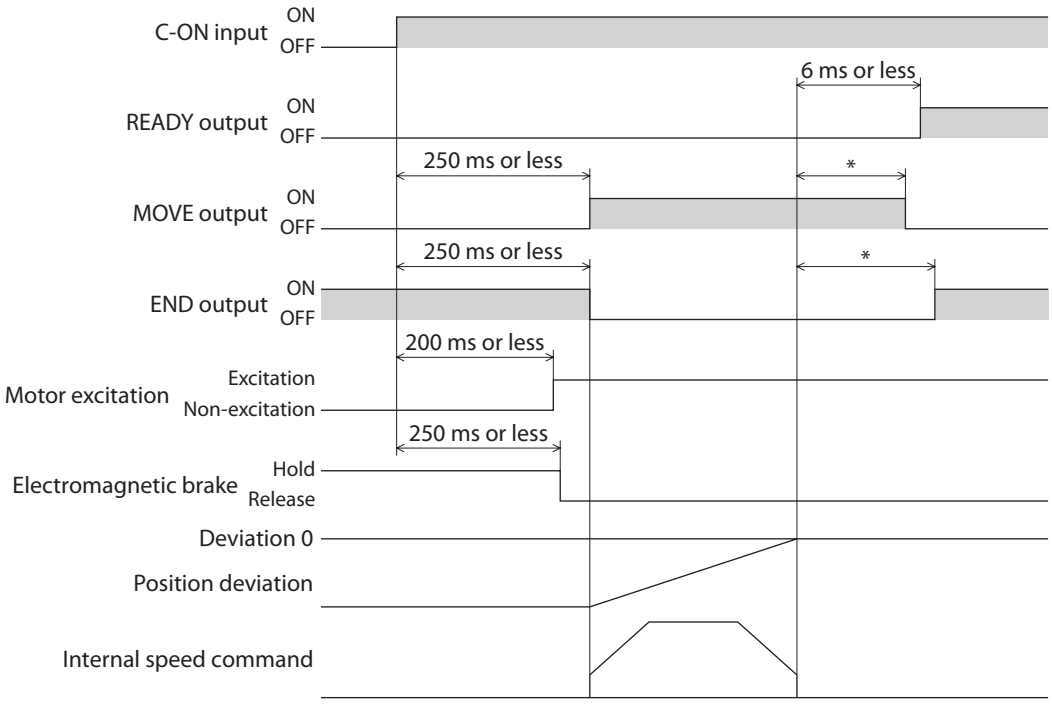

* The specific time varies depending on the load, operating speed, speed filter and other.

- **Operation is terminated with the STOP input**

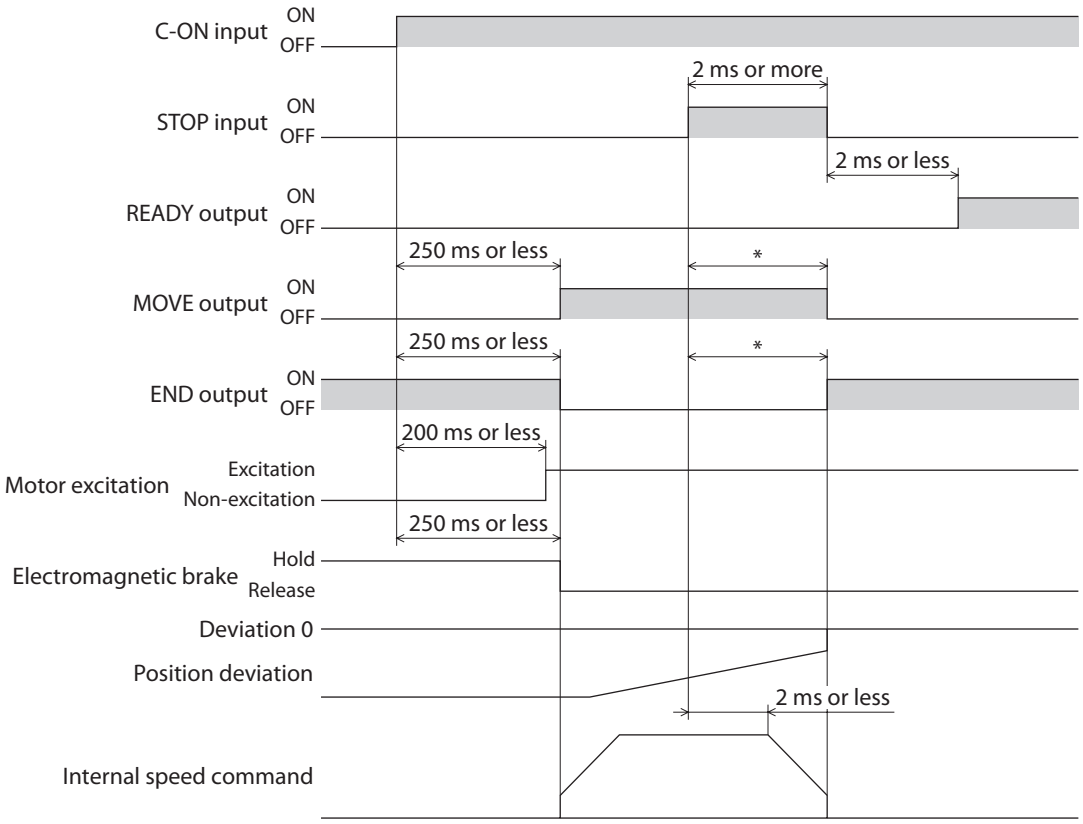

* The specific time varies depending on the load, operating speed, speed filter and other.

- **When the C-ON input is turned OFF while performing the automatic return operation**

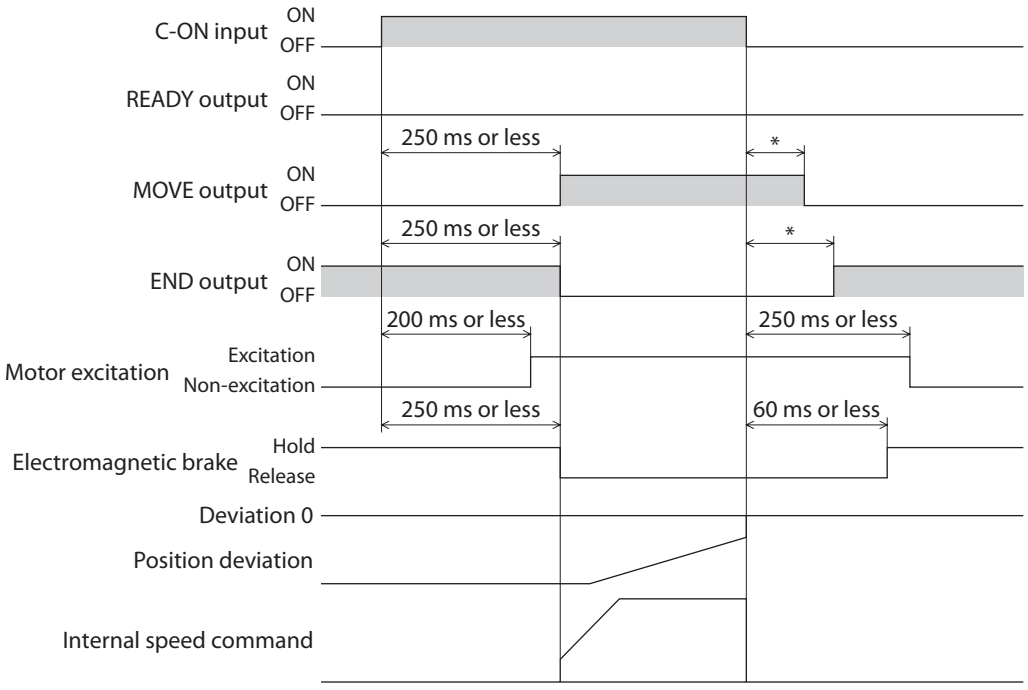

* The specific time varies depending on the load, operating speed, speed filter and other.

2 Specifications

Check on the Oriental Motor Website for the product specifications.

3 General specifications

3-1 AC power input

		Motor	Driver
Degree of protection		IP65 *1 (IP20 for the double-shaft type)	IP10
Operation environment	Ambient temperature	−10 to +50 °C (+14 to +122 °F) *2 (non-freezing) Harmonic geared type: 0 to +40 °C (+32 to +104 °F) *2 (non-freezing)	0 to +55 °C (+32 to +131 °F) *3 (non-freezing)
	Humidity	85% or less (non-condensing)	
	Altitude	Up to 1000 m (3300 ft.) above sea level	
	Surrounding atmosphere	No corrosive gas, dust, water or oil	
Storage environment	Ambient temperature	−20 to +60 °C (−4 to +140 °F) (non-freezing)	−25 to +70 °C (−13 to +158 °F) (non-freezing)
	Humidity	85% or less (non-condensing)	
	Altitude	Up to 3000 m (10000 ft.) above sea level	
	Surrounding atmosphere	No corrosive gas, dust, water or oil	
Shipping environment	Ambient temperature	−20 to +60 °C (−4 to +140 °F) (non-freezing)	−25 to +70 °C (−13 to +158 °F) (non-freezing)
	Humidity	85% or less (non-condensing)	
	Altitude	Up to 3000 m (10000 ft.) above sea level	
	Surrounding atmosphere	No corrosive gas, dust, water or oil	
Insulation resistance		100 MΩ or more when 500 VDC megger is applied between the following places: • Case - Motor and sensor windings • Case - Electromagnetic brake windings	100 MΩ or more when 500 VDC megger is applied between the following places: • Protective Earth Terminal - Power supply terminals • Signal I/O terminals - Power supply terminals
Dielectric strength		Sufficient to withstand 1.5 kVAC at 50/60 Hz applied between the following places for 1 minute: • Case - Motor and sensor windings • Case - Electromagnetic brake windings	Sufficient to withstand the following for 1 minute, leak current 13 mA or less. • Protective Earth Terminal - Power supply terminals 1.8 kVAC 50/60 Hz • Signal I/O terminals - Power supply terminals 1.9 kVAC 50/60 Hz

*1 Excluding the mounting surface and connectors.
*2 When installing a motor to a heat sink of a capacity at least equivalent to an aluminum plate [250×250 mm (9.84×9.84 in.), thickness 6 mm (0.24 in.)].
*3 When installing a driver to a heat sink of a capacity at least equivalent to an aluminum plate [200×200 mm (7.87×7.87 in.), thickness 2 mm (0.08 in.)].

3-2 DC power input

		Motor	Driver
Degree of protection		IP65 (Excluding the mounting surface and connectors.) IP20 (Double shaft type, models that the "motor identification" in the product model name is "**S**")	IP10
Operation environment	Ambient temperature	−10 to +50 °C (+14 to +122 °F) * (non-freezing) Harmonic geared type: 0 to +40 °C (+32 to +104 °F) * (non-freezing)	0 to +50 °C (+32 to +122 °F) (non-freezing)
	Humidity	85% or less (non-condensing)	
	Altitude	Up to 1000 m (3300 ft.) above sea level	
	Surrounding atmosphere	No corrosive gas, dust, water or oil	
Storage environment	Ambient temperature	−20 to +60 °C (−4 to +140 °F) (non-freezing)	−25 to +70 °C (−13 to +158 °F) (non-freezing)
	Humidity	85% or less (non-condensing)	
	Altitude	Up to 3000 m (10000 ft.) above sea level	
	Surrounding atmosphere	No corrosive gas, dust, water or oil	
Shipping environment	Ambient temperature	−20 to +60 °C (−4 to +140 °F) (non-freezing)	−25 to +70 °C (−13 to +158 °F) (non-freezing)
	Humidity	85% or less (non-condensing)	
	Altitude	Up to 3000 m (10000 ft.) above sea level	
	Surrounding atmosphere	No corrosive gas, dust, water or oil	
Insulation resistance		100 MΩ or more when 500 VDC megger is applied between the following places: • Case - Motor and sensor windings • Case - Electromagnetic brake windings	100 MΩ or more when 500 VDC megger is applied between the following places: • Frame ground terminal - Power supply terminals
Dielectric strength		Sufficient to withstand 1.0 kVAC (0.5 kVAC for ARM14, ARM15, ARM24 and ARM26) at 50/60 Hz applied between the following places for 1 minute: • Case - Motor and sensor windings • Case - Electromagnetic brake windings	Sufficient to withstand 500 VAC at 50/60 Hz applied between the following places for 1 minute: • Frame ground terminal - Power supply terminals

* When installing a motor to a heat sink of a capacity at least equivalent to an aluminum plate [100×100 mm (3.94×3.94 in.), thickness 6 mm (0.24 in.)].

4 Regulations and standards

4-1 UL Standards

Check the "APPENDIX UL Standards for **AR** Series" for recognition information about UL Standards.

4-2 EU Directives

■ CE Marking (AC power input)

This product is affixed the CE Marking under the Low Voltage Directive and EMC Directive.

- **Low Voltage Directive**

Applicable Standards

Motor	EN 60034-1, EN 60034-5, EN 60664-1
Driver	EN 61800-5-1

Installation conditions

Motor	To be incorporated in equipment Overvoltage category: II Pollution degree: 3 (2 for the double-shaft type) Protection against electric shock: Class I
Driver	To be incorporated in equipment Overvoltage category: II Pollution degree: 2 Protection against electric shock: Class I

- This product cannot be used in IT power distribution systems.
- Install the product within the enclosure in order to avoid contact with hands.
- Be sure to perform protective grounding if a product can be touched with hands. When installing the motor and driver, securely connect their Protective Earth Terminals.
- To protect against electric shock using an earth leakage breaker (RCD), connect a type B earth leakage breaker to the primary side of the driver.
- When using a circuit breaker (MCCB), use a unit conforming to the EN or IEC standard.
- Isolate the motor cable, power-supply cable and other drive cables from the signal cables (CN1, CN4 to CN9) by means of double insulation.
- The temperature of the driver's heat sink may exceed 90 °C (194 °F) depending on the driving conditions. Accordingly, take heed of the following items:
  • Do not touch the driver.
  • Do not use the driver near flammable objects.
  • Always conduct a trial operation to check the driver temperature.

- **EMC Directives**

This product is conducted EMC testing under the conditions specified in “Example of motor and driver installation and wiring” on p.50 . The conformance of your mechanical equipment with the EMC Directive will vary depending on such factors as the configuration, wiring, and layout for other control system devices and electrical parts used with this product. It therefore must be verified through conducting EMC measures in a state where all parts including this product have been installed in the equipment.

Applicable Standards

EMI	EN 55011 group 1 class A, EN 61000-6-4, EN 61800-3, EN 61000-3-2, EN 61000-3-3
EMS	EN 61000-6-2, EN 61800-3

⚠Caution This equipment is not intended for use in residential environments nor for use on a low-voltage public network supplied in residential premises, and it may not provide adequate protection to radio reception interference in such environments.

■ CE Marking (DC power input)

- **Low Voltage Directive**

  The input power supply voltage of this product is 24 VDC/48 VDC. Therefore this product is not subject to the Low Voltage Directive, but install and connect it as follows.
  - This product is designed and manufactured to be incorporated in equipment. Be sure to install the product in an enclosure.
  - For the driver power supply, use a DC power supply with reinforced insulation on its primary and secondary sides.

- **EMC Directives**

  This product is conducted EMC testing under the conditions specified in "Example of motor and driver installation and wiring" on p.80. The conformance of your mechanical equipment with the EMC Directive will vary depending on such factors as the configuration, wiring, and layout for other control system devices and electrical parts used with this product. It therefore must be verified through conducting EMC measures in a state where all parts including this product have been installed in the equipment.

  Applicable Standards

EMI	EN 55011 group 1 class A, EN 61000-6-4
EMS	EN 61000-6-2

⚠Caution This equipment is not intended for use in residential environments nor for use on a low-voltage public network supplied in residential premises, and it may not provide adequate protection to radio reception interference in such environments.

4-3 Republic of Korea, Radio Waves Act

This product is affixed the KC Mark under the Republic of Korea, Radio Waves Act.

4-4 RoHS Directive

The products do not contain the substances exceeding the restriction values of RoHS Directive (2011/65/EU).

■ Revision record

Revision number	Revised contents
First edition	
Second edition	• Revision of words and terms • Correction of minor erroneous descriptions

- Unauthorized reproduction or copying of all or part of this Manual is prohibited.
  If a new copy is required to replace an original manual that has been damaged or lost, please contact your nearest Oriental Motor branch or sales office.
- Oriental Motor shall not be liable whatsoever for any problems relating to industrial property rights arising from use of any information, circuit, equipment or device provided or referenced in this manual.
- Characteristics, specifications and dimensions are subject to change without notice.
- While we make every effort to offer accurate information in the manual, we welcome your input. Should you find unclear descriptions, errors or omissions, please contact the nearest office.
- **Orientalmotor** , α_{STEP} and FLEX are registered trademark or trademark of Oriental Motor Co., Ltd., in Japan and other countries.
  Modbus is a registered trademark of the Schneider Automation Inc.
  CC-Link is a registered trademark of the CC-Link Partner Association.
  EtherCAT® is registered trademark and patented technology, licensed by Beckhoff Automation GmbH, Germany.
  MECHATROLINK is a registered trademark of the MECHATROLINK Members Association.
  Other product names and company names mentioned in this manual may be registered trademarks or trademarks of their respective companies and are hereby acknowledged. The third-party products mentioned in this manual are recommended products, and references to their names shall not be construed as any form of performance guarantee. Oriental Motor is not liable whatsoever for the performance of these third-party products.

© Copyright ORIENTAL MOTOR CO., LTD. 2017

Published in December 2017

• Please contact your nearest Oriental Motor office for further information.

ORIENTAL MOTOR U.S.A. CORP.
Technical Support Tel:(800)468-3982
8:30 A.M. to 5:00 P.M., P.S.T. (M-F)
7:30 A.M. to 5:00 P.M., C.S.T. (M-F)
www.orientalmotor.com

ORIENTAL MOTOR DO BRASIL LTDA.
Tel:+55-11-3266-6018
www.orientalmotor.com.br

ORIENTAL MOTOR (EUROPA) GmbH
Schiessstraße 44, 40549 Düsseldorf, Germany
Technical Support Tel:00 800/22 55 66 22
www.orientalmotor.de

ORIENTAL MOTOR (UK) LTD.
Tel:01256-347090
www.oriental-motor.co.uk

ORIENTAL MOTOR (FRANCE) SARL
Tel:01 47 86 97 50
www.orientalmotor.fr

ORIENTAL MOTOR ITALIA s.r.l.
Tel:02-93906346
www.orientalmotor.it

ORIENTAL MOTOR ASIA PACIFIC PTE. LTD.
Singapore
Tel:1800-8420280
www.orientalmotor.com.sg

ORIENTAL MOTOR (MALAYSIA) SDN. BHD.
Tel:1800-806161
www.orientalmotor.com.my

ORIENTAL MOTOR (THAILAND) CO., LTD.
Tel:1800-888-881
www.orientalmotor.co.th

ORIENTAL MOTOR (INDIA) PVT. LTD.
Tel:+91-80-41125586
www.orientalmotor.co.in

TAIWAN ORIENTAL MOTOR CO., LTD.
Tel:0800-060708
www.orientalmotor.com.tw

SHANGHAI ORIENTAL MOTOR CO., LTD.
Tel:400-820-6516
www.orientalmotor.com.cn

INA ORIENTAL MOTOR CO., LTD.
Korea
Tel:080-777-2042
www.inaom.co.kr

ORIENTAL MOTOR CO., LTD.
Hong Kong Branch
Tel:+852-2427-9800

ORIENTAL MOTOR CO., LTD.
4-8-1 Higashiueno, Taito-ku, Tokyo
110-8536 Japan
Tel:03-6744-0361
www.orientalmotor.co.jp