Oriental motor

HM-60538-3

αSTEP AZ Series/ Motorized Actuator equipped with AZ Series

EtherNet/IP™ Compatible Driver

USER MANUAL

Introduction

AC power input type

DC power input type

Implicit communication

Parameter ID lists

Troubleshooting

Reference materials

Thank you for purchasing an Oriental Motor product.
This Manual describes product handling procedures and safety precautions.

- Please read it thoroughly to ensure safe operation.
- Always keep the manual where it is readily available.

Original instructions

1 Introduction

1 **Before using the product** 8

2 **Operating manuals** 9

2-1 Related operating manuals 9

2-2 How to use operating manuals 9

3 **Overview of the product** 11

4 **Safety precautions** 12

4-1 Graphical symbols on the driver's front panel (AC power input driver) 14

4-2 Warning indication (AC power input driver) 14

5 **Precautions for use** 15

2 AC power input type

1 **System configuration** 18

2 **Preparation** 19

2-1 Checking the product 19

2-2 How to identify the product model 19

2-3 Products possible to combine 19

2-4 Information about nameplate 20

2-5 Names and functions of parts 20

2-6 Indication of LEDs 22

3 **Installation** 24

3-1 Installation location 24

3-2 Installation method 24

4 **Connection** 26

4-1 Connection example 26

4-2 Connecting the control power supply 27

4-3 Connecting the regeneration resistor 28

4-4 Connecting the main power supply 29

4-5 Grounding the driver 30

4-6 Connecting the EtherNet/IP communication cable 30

4-7 Connecting the USB cable 30

4-8 Connecting the I/O signals 31

4-9 Noise elimination measures 36

4-10 Conformity to the EMC Directive/Regulations 37

5 **Setting of IP address** 39

5-1 When using the IP address setting switches 39

5-2 When setting with parameters 40

5-3 When setting with DHCP server 41

6 **Power removal function** 42

6-1 Safety parameters 42

6-2 Notes when using the power removal function 43

6-3 I/O signals 43

6-4 Operation of power removal function 44
6-5 Example of use 47
6-6 Verification testing of power removal function 48
6-7 Related functions 48

7 Inspection and maintenance 52

7-1 Inspection 52
7-2 Warranty 52
7-3 Disposal 52

8 Cables 53

8-1 Connection cable (For cable type) 53
8-2 Connection cables (For connector type) 56
8-3 I/O signal cable 57

9 Accessories 58

9-1 Pulse signal converter for noise immunity 58
9-2 Relay contact protection circuit/module 58
9-3 Regeneration resistor 58

3 DC power input type

1 System configuration 60

2 Preparation 61

2-1 Checking the product 61
2-2 How to identify the product model 61
2-3 Products possible to combine 61
2-4 Information about nameplate 62
2-5 Names and functions of parts 62
2-6 Indication of LEDs 64

3 Installation 66

3-1 Installation location 66
3-2 Installation method 66

4 Connection 68

4-1 Connection example 68
4-2 Connecting the control power supply 69
4-3 Connecting the main power supply and grounding 70
4-4 Connecting the EtherNet/IP communication cable 72
4-5 Connecting the USB cable 72
4-6 Connecting the I/O signals 73
4-7 Noise elimination measures 78
4-8 Conformity to the EMC Directive/Regulations 79

5 Setting of IP address 81

5-1 When using the IP address setting switches 81
5-2 When setting with parameters 82
5-3 When setting with DHCP server 83

6 Power removal function 84
6-1 Safety parameters 84
6-2 Notes when using the power removal function 85
6-3 I/O signals 85
6-4 Operation of power removal function 86
6-5 Example of use 89
6-6 Verification testing of power removal function 90
6-7 Related functions 90
7 Inspection and maintenance 94
7-1 Inspection 94
7-2 Warranty 94
7-3 Disposal 94
8 Cables 95
8-1 Connection cable (For cable type) 95
8-2 Connection cables (For connector type) 99
8-3 I/O signal cable 101
9 Accessories 102
9-1 Pulse signal converter for noise immunity 102
9-2 Relay contact protection circuit/module 102

4 Implicit communication

1 Flow of setting of Implicit communication 104
2 Guidance 105
3 Communications specifications 109
4 Implicit message 110
4-1 Implicit message format 110
4-2 Input data 111
4-3 Output data 114
4-4 Processing order of Implicit communication 118
4-5 Data writing 119
4-6 Data reading 120
5 Example of execution for operation 122
5-1 Positioning operation 122
5-2 Continuous operation 123
6 Direct data operation 124
6-1 Overview of direct data operation 124
6-2 OUTPUT data and parameters required for direct data operation 125
6-3 Operation example 128

5 Parameter ID lists

1 Timing for parameter to update 132

2 Maintenance commands 133

3 Monitor commands 135

4 Operation data R/W commands 139

4-1 Base address of each operation data number 139

4-2 Parameter ID 141

4-3 Setting example 142

5 Operation I/O event R/W commands 143

5-1 Base address of operation I/O event 143

5-2 Parameter ID for operation I/O event R/W command 143

6 Protect release commands 144

7 Extended operation data setting R/W command 145

8 Parameter R/W commands 146

8-1 Driver action simulation setting parameter 146

8-2 Basic setting parameters 146

8-3 Position coordinate parameters 147

8-4 Operation parameters 147

8-5 Direct data operation parameters 147

8-6 ABZO sensor setting parameters 148

8-7 Mechanism settings parameters 148

8-8 Initial coordinate generation & wrap coordinate parameters 148

8-9 JOG/HOME/ZHOME operation information setting parameters 149

8-10 Power removal function setting parameters 150

8-11 Alarm setting parameters 150

8-12 Information setting parameters 151

8-13 I/O parameters 152

8-14 Direct I/O setting parameters 156

8-15 Remote I/O setting parameters 157

8-16 Extended input setting parameters 158

8-17 Differential output setting parameters 159

8-18 Virtual input parameters 159

8-19 User output setting parameters 160

8-20 Driver mode setting parameters 160

8-21 EtherNet/IP communication setting parameters 160

9 I/O signals assignment list 162

9-1 Input signals 162

9-2 Output signals 163

6 Troubleshooting

1 Detection of communication errors 166

1-1 Communication timeout 166

1-2 IP address conflict 166

2 Alarms 167

2-1 Alarm reset 167

2-2 Alarm history 167

2-3 Generation condition of alarms 167

2-4 Alarm list 168

2-5 Timing chart 175

3 Information 177

3-1 Information history 180

3-2 Information list 180

4 Troubleshooting and remedial actions 183

7 Reference materials

1 Timing chart 186

2 Specifications 187

2-1 General specifications 187

2-2 Product specifications 188

3 Regulations and standards 190

3-1 UL Standards, CSA Standards 190

3-2 CE Marking / UKCA Marking (AC power input driver) 190

3-3 CE Marking / UKCA Marking (DC power input driver) 192

3-4 Functional safety 192

1 Introduction

This part explains the product overview and safety precautions in addition to the types and descriptions about operating manuals.

◆Table of contents

1 Before using the product 8

2 Operating manuals 9

2-1 Related operating manuals.....9

2-2 How to use operating manuals 9

3 Overview of the product..... 11

4 Safety precautions 12

4-1 Graphical symbols on the driver's front panel (AC power input driver)..... 14

4-2 Warning indication (AC power input driver) 14

5 Precautions for use..... 15

1 Before using the product

Only qualified personnel of electrical and mechanical engineering should work with the product.
Use the product correctly after thoroughly reading the section "4 Safety precautions" on p.12. In addition, be sure to observe the contents described in warning, caution, and note in this manual.
The product described in this manual is designed and manufactured to be incorporated in general industrial equipment. Do not use for any other purpose. Oriental Motor Co., Ltd. is not responsible for any compensation for damage caused through failure to observe this warning.

2 Operating manuals

2-1 Related operating manuals

For operating manuals, download from Oriental Motor Website Download Page or contact your nearest Oriental Motor sales office.

- **AZ** Series/Motorized Actuator equipped with **AZ** Series EtherNet/IP™ Compatible Driver USER MANUAL (this document)
- **AZ** Series/Motorized Actuator equipped with **AZ** Series OPERATING MANUAL Function Edition

Read the following operating manuals for motors and motorized actuators.

- OPERATING MANUAL Motor Edition
- OPERATING MANUAL Actuator Edition
- Motorized Actuator OPERATING MANUAL Function Setting Edition

2-2 How to use operating manuals

To use the product, read this manual together with the **AZ** Series OPERATING MANUAL Function Edition.
This manual describes contents specific to the EtherNet/IP compatible driver, and the **AZ** Series OPERATING MANUAL Function Edition describes contents common to the **AZ** Series products. Refer to the **AZ** Series OPERATING MANUAL Function Edition for the contents not included in this manual.
For each control method, reference destinations are indicated according to the flow of use.

■ How to read reference destinations

The title name of the operating manual is described in the reference destination.

memo The title number described in the reference destination may be changed. Use the title name when checking the reference destination.

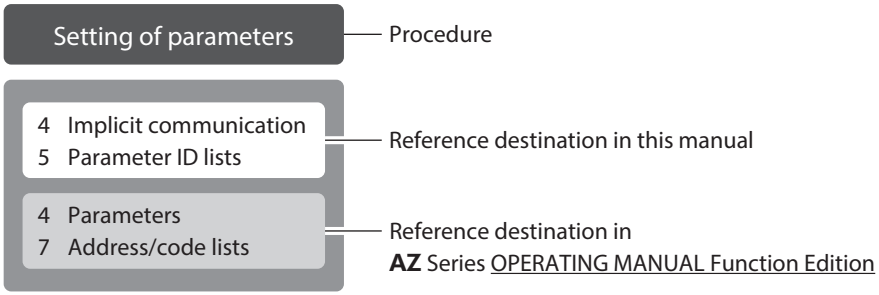

■ When controlling via EtherNet/IP

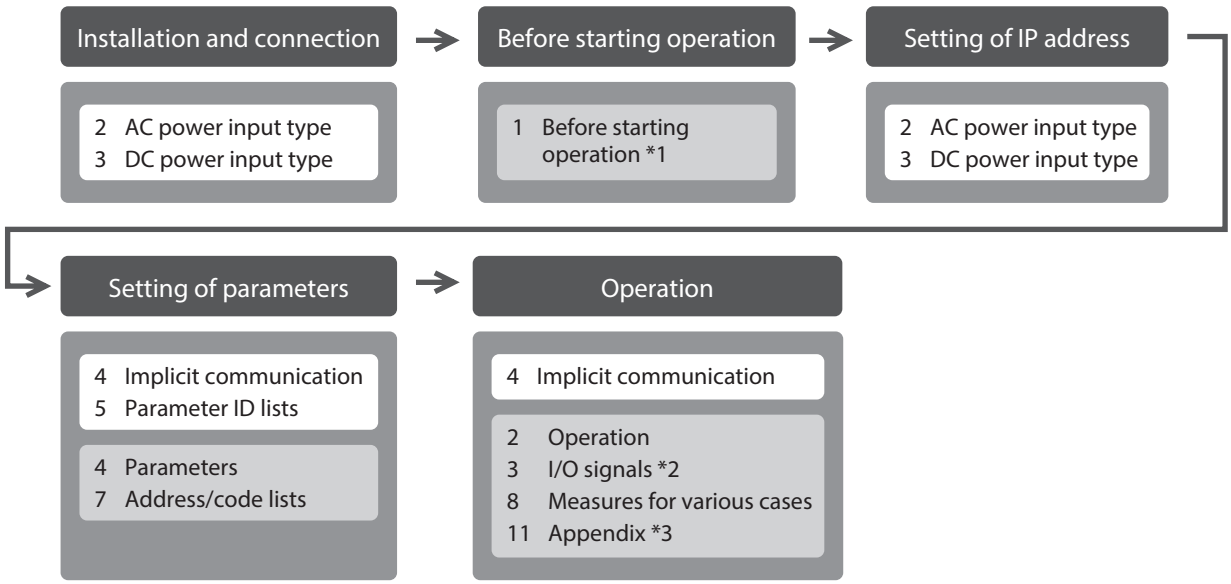

*1 When a motorized actuator is used, the following contents cannot be operated via EtherNet/IP. Use the support software **MEXE02**.
- Copying the fixed value (parameter) of the ABZO sensor to a driver
- Creation of recovery data file and method of recovery

*2 Refer to this manual for "power removal function."
- When the AC power input driver is used: p.42
- When the DC power input driver is used: p.84

*3 Refer to this manual for "LEDs of the driver."
- When the AC power input driver is used: p.22
- When the DC power input driver is used: p.64

■ When controlling by inputting pulse signals

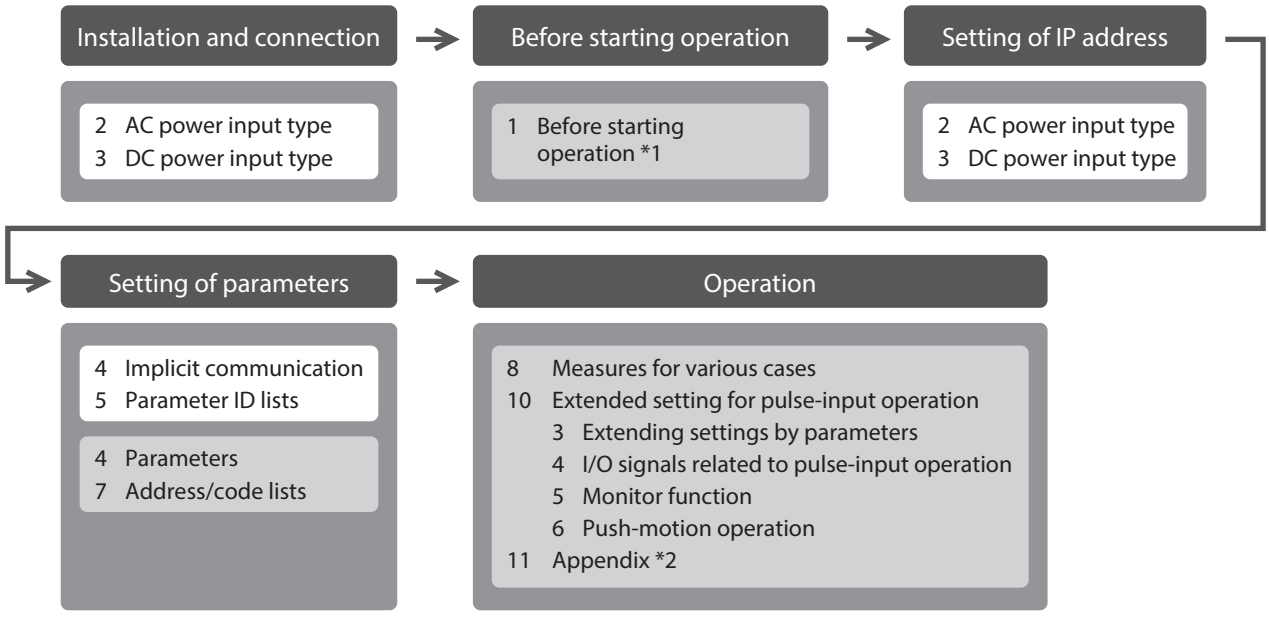

*1 When a motorized actuator is used, the following contents cannot be operated via EtherNet/IP. Use the support software **MEXE02**.
- Copying the fixed value (parameter) of the ABZO sensor to a driver
- Creation of recovery data file and method of recovery

*2 Refer to this manual for "LEDs of the driver."
- When the AC power input driver is used: p.22
- When the DC power input driver is used: p.64

3 Overview of the product

The **AZ** Series EtherNet/IP compatible driver is the dedicated driver for the **AZ** Series products.

■ Lineup

Two types of the **AZ** Series EtherNet/IP compatible drivers are available: AC power input type and DC power input type.

■ Two types of control methods

- **Operation by Implicit communication (periodic communication) of EtherNet/IP**
- **Operation by inputting pulses**

■ Setting methods of operation data and parameters

Operation data and parameters can be set via EtherNet/IP or using the **MEXE02**.
This manual describes how to set operation data and parameters via EtherNet/IP.

■ Equipped with direct data operation function

The direct data operation is a function to start operation at the same time as rewriting of the data. It can be used when the setting of the operation data is changed frequently, such as changing the speed or travel amount according to a load.

■ Equipped with power removal function

The power removal function is a function that stops supplying the power to the motor by the hardware. The power removal function is assumed to be used to prevent unexpected starting of the moving parts of equipment when an operator works inside the operating range of the moving parts.

■ Providing the EDS file

The EDS file (Electronic Data Sheets file) is a file that describes the specific information of the EtherNet/IP compatible products. By importing the EDS file to the setting tool of the scanner, settings of EtherNet/IP can be performed before you receive the driver.
For details, contact your nearest Oriental Motor sales office.

4 Safety precautions

The precautions described below are intended to ensure the safe and correct use of the product, and to prevent the customer and others from exposure to the risk of injury. Use the product only after carefully reading and fully understanding these instructions.

⚠WARNING	Handling the product without observing the instructions that accompany a "WARNING" symbol may result in serious injury or death.
⚠CAUTION	Handling the product without observing the instructions that accompany a "CAUTION" symbol may result in injury or property damage.
Note	The items under this heading contain important handling instructions that the user should observe to ensure the safe use of the product.
memo	The items under this heading contain related information and contents to gain a further understanding of the text in this manual.

⚠WARNING

■ Common to AC power input driver and DC power input driver

General

- Do not use the driver in explosive or corrosive environments, in the presence of flammable gases, in places subjected to splashing water, or near combustibles. Doing so may result in fire, electric shock, or injury.
- Assign qualified personnel to the task of installing, wiring, operating/controlling, inspecting, and troubleshooting the driver. Handling by unqualified personnel may result in fire, electric shock, injury, or damage to equipment.
- Do not transport, install, connect, or inspect the driver while the power is supplied. Doing so may result in electric shock.
- Do not touch the driver while the power is supplied. Doing so may result in fire or electric shock.
- Take measures to keep the moving part in position if the product is used in vertical operations such as elevating equipment. Failure to do so may result in injury or damage to equipment.
- When an alarm is generated in the driver (any of the driver's protective functions is triggered), remove the cause before clearing the alarm (protective function). Continuing the operation without removing the cause of the problem may cause malfunction of the motor and the driver, leading to injury or damage to equipment.

Installation

- Install the driver inside an enclosure. Failure to do so may result in electric shock or injury.

Connection

- Always keep the power supply voltage of the driver within the specified range. Failure to do so may result in fire or electric shock.
- Connect the product securely according to the wiring diagram. Failure to do so may result in fire or electric shock.
- Do not forcibly bend, pull, or pinch the cable. Doing so may result in fire or electric shock.

Operation

- Turn off the main power supply and the control power supply in the event of a power failure. Failure to do so may result in injury or damage to equipment.
- Take safety measures in the event of a momentary voltage drop. Failure to do so may cause the motor to stop or reduce the holding force or rotational torque, resulting in injury or damage to equipment.
- Do not remove the motor excitation during operation. Doing so may cause the motor to stop and lose the holding force, resulting in injury or damage to equipment.

Repair, disassembly, and modification

- Do not disassemble or modify the driver. Doing so may result in injury or damage to equipment.

■ AC power input driver

General

- Do not touch the terminals indicated ⚠ ⚠ signs on the driver's front panel while the power is supplied because high voltage is applied. Doing so may result in fire or electric shock.

Installation

- Be sure to ground the driver as it is Class I equipment. Failure to do so may result in electric shock.

Inspection and maintenance

- Do not touch the connection terminals of the driver immediately after turning off the main power supply and the control power supply. Before performing connection or inspection, turn off the main power supply and the control power supply, and check the CHARGE LED has been turned off. The residual voltage may cause electric shock.

⚠CAUTION

■ Common to AC power input driver and DC power input driver

General

- Do not use the driver beyond its specifications. Doing so may result in electric shock, injury, or damage to equipment.
- Keep your fingers and objects out of the openings in the driver. Failure to do so may result in fire, electric shock, or injury.
- Do not touch the driver during operation or immediately after stopping. Doing so may result in a skin burn(s).
- Do not forcibly bend or pull the cable that is connected to the driver. Doing so may result in damage.

Installation

- Keep the area around the driver free of combustible materials. Failure to do so may result in fire or a skin burn(s).
- Do not leave anything around the driver that would obstruct ventilation. Doing so may result in damage to equipment.

Operation

- Use a motor and a driver only in the specified combination. An incorrect combination may cause a fire.
- Provide an emergency stop device or emergency stop circuit external to the equipment so that the entire equipment will operate safely in the event of a system failure or malfunction. Failure to do so may result in injury.
- Before turning on the main power supply and the control power supply, turn all input signals to the driver to OFF. Failure to do so may result in injury or damage to equipment.
- When moving the moving part manually, put the motor into a non-excitation state. Continuing the work while the motor is in an excitation state may result in injury.
- When an abnormal condition has occurred, immediately stop operation to turn off the main power supply and the control power supply. Failure to do so may result in fire, electrical shock, or injury.
- Take measures against static electricity when operating the switches of the driver. Failure to do so may result in the driver malfunction or damage to equipment.

Inspection and maintenance

- Do not touch the terminals while conducting the insulation resistance measurement or the dielectric strength test. Doing so may result in electric shock.

■ AC power input driver

Operation

- For the control power supply, use a DC power supply with reinforced insulation on its primary and secondary sides. Failure to do so may result in electric shock.

■ DC power input driver

Operation

- For the main power supply and the control power supply, use a DC power supply with reinforced insulation on its primary and secondary sides. Failure to do so may result in electric shock.

4-1 Graphical symbols on the driver's front panel (AC power input driver)

	⚠WARNING	This is the Protective Earth Terminal. Be sure to ground because improper grounding may result in electric shock.
	⚠WARNING	A high voltage is applied to the motor connector (CN3) and the main power supply input terminals (CN4). Do not touch them while the power is supplied. Doing so may result in fire or electric shock.

4-2 Warning indication (AC power input driver)

A warning about handling precautions is described on the driver. Be sure to observe the description contents when handling the product.

Electrical hazard warning label



Material: PET

5 Precautions for use

This chapter covers restrictions and requirements the user should consider when using the product.

■ Common to AC power input driver and DC power input driver

- **Be sure to use our cable to connect the motor and the driver.**

  Check the cable models on p.53 (AC power input driver) or p.95 (DC power input driver).

- **When conducting the insulation resistance measurement or the dielectric strength test, be sure to separate the connection between the motor and the driver.**

  Conducting the insulation resistance measurement or dielectric strength test with the motor and the driver connected may result in damage to the product.

- **Note on connecting a power supply whose positive terminal is grounded**

  The USB communication connector and CN7 connector on the driver are not electrically insulated. When grounding the positive terminal of the power supply, do not connect any equipment (PC, etc.) whose negative terminal is grounded. Doing so may cause the driver and this equipment to short, damaging both. When connecting, do not ground equipment.

- **Storing data in the non-volatile memory**

  Do not turn off the control power supply while writing the data to the non-volatile memory, and also do not turn off for 5 seconds after the completion of writing the data. Doing so may abort writing the data and cause an alarm of EEPROM error to generate. The non-volatile memory can be rewritten approximately 100,000 times.

- **Noise elimination measures**

  Refer to p.36 (AC power input driver) or p.78 (DC power input driver) for the noise elimination measures.

■ AC power input driver

- **Preventing leakage current**

  Stray capacitance exists between the driver's current-carrying line and other current-carrying lines, the earth and the motor, respectively. A high-frequency current may leak out through such capacitance, having a detrimental effect on the surrounding equipment. The actual leakage current depends on the driver's switching frequency, the length of wiring between the driver and the motor, and so on. When installing an earth leakage breaker, use a product offering resistance against high frequency current such as the one specified below.
  Mitsubishi Electric Corporation: NV series

- **If vertical drive (gravitational operation) such as elevating applications is performed or if sudden start-stop operation of a large inertia load is repeated frequently, connect our regeneration resistor RGB100.**

  An alarm of overvoltage may be detected depending on the operating condition of the motor. When the alarm of overvoltage has been detected, reconsider the operating condition or use our regeneration resistor **RGB100**. Refer to p.28 for the connection method.

2 AC power input type

This part explains contents specific to the AC power input type driver.

◆Table of contents

1 System configuration 18

2 Preparation 19

2-1 Checking the product 19
2-2 How to identify the product model 19
2-3 Products possible to combine 19
2-4 Information about nameplate 20
2-5 Names and functions of parts 20
2-6 Indication of LEDs 22

3 Installation 24

3-1 Installation location 24
3-2 Installation method 24

4 Connection 26

4-1 Connection example 26
4-2 Connecting the control power supply 27
4-3 Connecting the regeneration resistor 28
4-4 Connecting the main power supply 29
4-5 Grounding the driver 30
4-6 Connecting the EtherNet/IP communication cable 30
4-7 Connecting the USB cable 30
4-8 Connecting the I/O signals 31
4-9 Noise elimination measures 36
4-10 Conformity to the EMC Directive/ Regulations 37

5 Setting of IP address 39

5-1 When using the IP address setting switches 39
5-2 When setting with parameters 40
5-3 When setting with DHCP server 41

6 Power removal function 42

6-1 Safety parameters 42
6-2 Notes when using the power removal function 43
6-3 I/O signals 43
6-4 Operation of power removal function 44
6-5 Example of use 47
6-6 Verification testing of power removal function 48
6-7 Related functions 48

7 Inspection and maintenance 52

7-1 Inspection 52
7-2 Warranty 52
7-3 Disposal 52

8 Cables 53

8-1 Connection cable (For cable type) 53
8-2 Connection cables (For connector type) 56
8-3 I/O signal cable 57

9 Accessories 58

9-1 Pulse signal converter for noise immunity 58
9-2 Relay contact protection circuit/ module 58
9-3 Regeneration resistor 58

1 System configuration

The figure shows an example when the cable type electromagnetic brake motor with single-phase 200-240 VAC input is used.

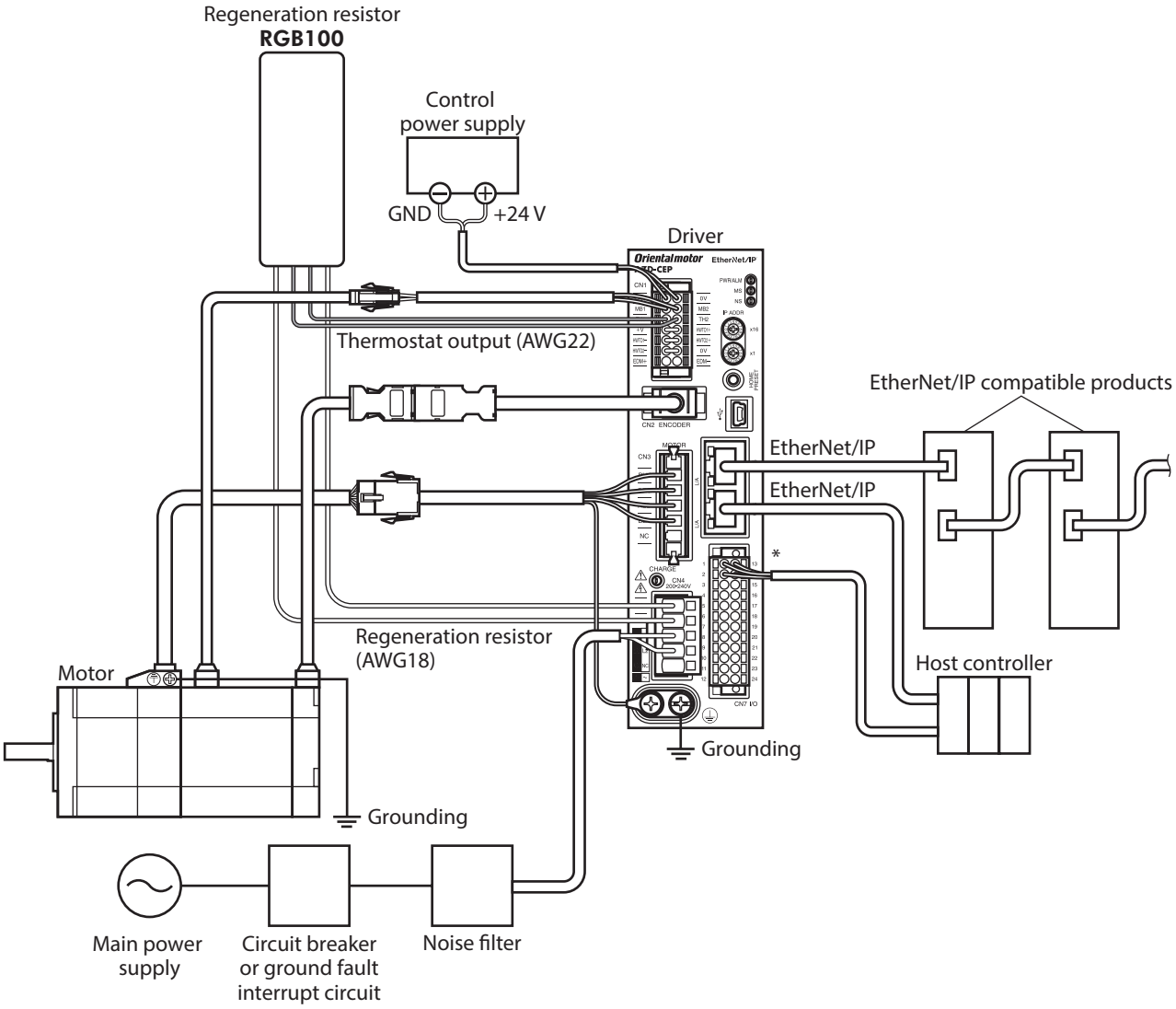

* Connect when using direct I/O or sensors.

2 Preparation

This chapter explains the items you should check, as well as names and functions of each part.

2-1 Checking the product

Verify that the items listed below are included. Report any missing or damaged items to the Oriental Motor sales office from which you purchased the product.

- Driver ..... 1 unit
- CN1 connector (14 pins) ..... 1 pc.
- CN4 connector (5 pins)..... 1 pc.
- CN7 connector (24 pins) ..... 1 pc.
- Connector lever..... 1 pc. (for CN4 connector)
- Instructions and Precautions for Safe Use..... 1 copy

Included connector model

Type	Part number	Manufacturer
CN1 connector	DFMC1,5/7-ST-3,5-LR	PHOENIX CONTACT GmbH & Co. KG
CN4 connector	05JFAT-SAXGDK-H5.0	J.S.T. Mfg. Co., Ltd.
CN7 connector	DFMC1,5/12-ST-3,5	PHOENIX CONTACT GmbH & Co. KG

2-2 How to identify the product model

Check the model name of the driver against the number shown on the nameplate. Refer to p.20 for how to identify the nameplate.

AZD - C EP
1 2 3

1	Series	**AZD**: **AZ** Series driver
2	Power supply input	**A**: Single-phase 100-120 VAC **C**: Single-phase/Three-phase 200-240 VAC
3	Network type	**EP**: EtherNet/IP

2-3 Products possible to combine

Products with which the driver can be combined are listed below. Check the model name of the product with the nameplate.

Power supply type	Product type	Applicable series	Model name representing series name *1	Example of model name
AC input	Stepping motor	**AZ** Series	**AZM**	**AZM46AC** **AZM66AC-TS10**
	Motorized actuator	**EAS** Series *2	**EASM**	**EASM4NXD005AZAC**
		EAC Series *2	**EACM**	**EACM4RWE15AZMC**
		EZS Series *2	**EZSM**	**EZSM6D005AZAC**
		EZSH Series *2	**EZSHM**	**EZSHM6H020AZAC**
		DGII Series	**DGM** **DGB** **DGR**	**DGM85R-AZAC** **DGB85R12-AZACR** **DGR85R36-AZACHR**
		L Series	**LM**	**LM4F500AZMC-10**

*1 The driver described in this manual can be combined with products that begin with these model names.
*2 For these motorized actuators, the equipped motors have been evaluated to affix the CE Marking. Check the model name of the equipped motor with the nameplate.

2-4 Information about nameplate

The figure shows an example.

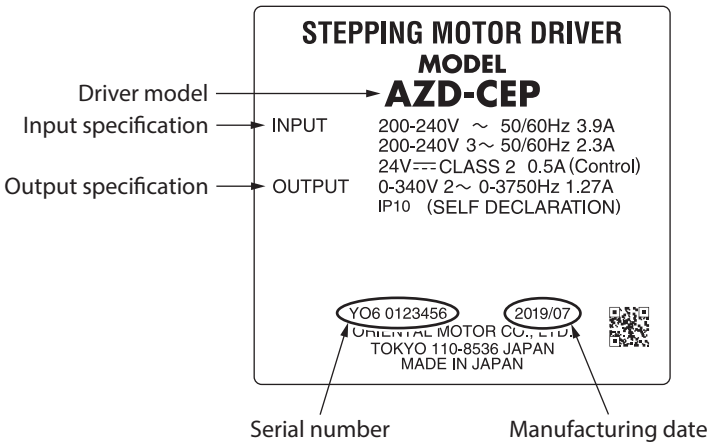

memo The position describing the information may vary depending on the product.

2-5 Names and functions of parts

The figure shows the **AZD-CEP**.

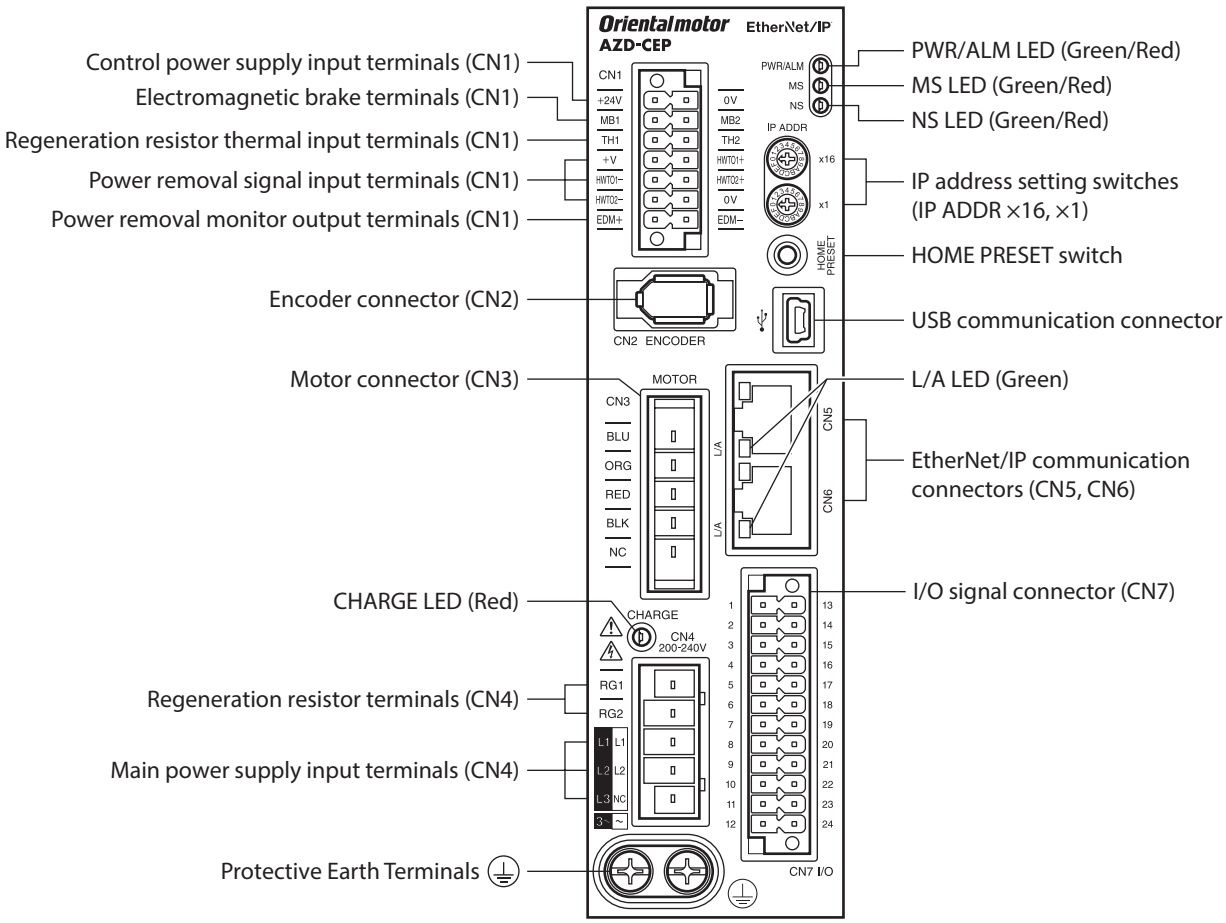

Type	Name	Sign	Description
LED	CHARGE LED (Red)	CHARGE	This LED is lit while the main power supply is turned on. After the main power has been turned off, the LED will turn off once the residual voltage in the driver drops to a safe level.
	PWR/ALM LED (Green/Red)	PWR/ALM	• This LED is lit in green while the control power supply is turned on. • If an alarm (protective function) is generated, the LED will blink in red. • If the power removal function (p.42) is triggered, the LED will blink in green. • If information is generated, the LED will simultaneously blink in red and green twice. (Green and red colors may overlap and it may be visible to orange.)
	MS LED (Green/Red)	MS	This LED indicates the status of the driver.
	NS LED (Green/Red)	NS	This LED indicates the communication status of EtherNet/IP.
	L/A LED (Green)	L/A	This LED indicates the LINK/ACT status of EtherNet/IP.
Switch	IP address setting switches	IP ADDR ×16 IP ADDR ×1	These switches are used to set an IP address. Factory setting: 00 (×16: 0, ×1: 0)
	HOME PRESET switch	HOME PRESET	This switch is used to set the starting position (home) when positioning operation is performed.
Connector	Encoder connector (CN2)	ENCODER	Connects the encoder.
	Motor connector (CN3)	MOTOR	Connects the motor.
	USB communication connector		Connects a PC in which the **MEXE02** has been installed. (USB2.0 mini-B port)
	EtherNet/IP communication connectors (CN5, CN6)	–	Connects the EtherNet/IP communication cable.
	I/O signal connector (CN7)	I/O	Connects when using direct I/O or sensors.
Terminal	Control power supply input terminals (CN1)	+24V, 0V	Connects the control power supply.
	Electromagnetic brake terminals (CN1)	MB1, MB2	Connects the lead wires from the electromagnetic brake.
	Regeneration resistor thermal terminals (CN1)	TH1, TH2	Connects our regeneration resistor **RGB100**. If the regeneration resistor **RGB100** is not connected, short the TH1 and TH2 terminals.
	Power removal signal input terminals (CN1)	HWTO1+, HWTO1– HWTO2+, HWTO2–	Connects the external device.
	Power removal monitor output terminals (CN1)	EDM+, EDM–	
	Regeneration resistor terminals (CN4)	RG1, RG2	Connects our regeneration resistor **RGB100**.
	Main power supply input terminals (CN4)	L, N, NC L1, L2, NC L1, L2, L3	Connects the main power supply.
	Protective Earth Terminals		Ground using a grounding wire of AWG16 to 14 (1.25 to 2.0 mm^2).

2-6 Indication of LEDs

■ PWR/ALM LED

This LED indicates the status of the driver.

LED status		Description
Green	Red	
Unlit	Unlit	The control power supply is not turned on.
Lit	Unlit	The control power supply is turned on.
Unlit	Blinking	An alarm is being generated. Details about the generated alarm can be checked by counting the number of times the LED blinks. The LED is lit in green when the alarm is reset.
Blinking	Unlit	The power removal function has been activated. After the power removal function is released, the LED is lit in green when the ETO-CLR input is turned ON.
Blinking twice at the same time *		• Information is being generated. The LED is lit in green when the information is cleared. • Teaching, remote operation is being executed with the **MEXE02**. The LED is lit in green when teaching, remote operation is complete.
Blinking at the same time *		The interlock was released by holding down the HOME PRESET switch. The LED is lit in green when the time set in the "Extended input (EXT-IN) interlock releasing duration" parameter is elapsed.
Lit at the same time *		The input signal assigned to the HOME PRESET switch is being executed. The LED is lit in green when it is complete.
Repeating "Green → Red → Simultaneously lit → Unlit"		This is the driver simulation mode.

* Green and red colors may overlap and it may be visible to orange.

■ MS LED

This LED indicates the status of the driver.

LED status		Description
Green	Red	
Unlit	Unlit	The control power supply of the driver is not turned on.
Blinking	Unlit	The communication setting of EtherNet/IP is invalid.
Lit	Unlit	The driver operates properly.
Unlit	Blinking	• An alarm that can be reset with EtherNet/IP or the **MEXE02** was generated. • The setting of an IP address is duplicated in the same system.
Unlit	Lit	An alarm that cannot be reset with EtherNet/IP or the **MEXE02** was generated.
Blinking alternately		Self-diagnosis when turning on the power is executing.

The timing to blink the LED is as follows.

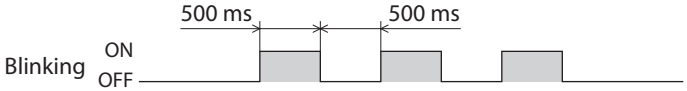

■ NS LED

This LED indicates the communication status of EtherNet/IP.

LED status		Description
Green	Red	
Unlit	Unlit	• In an offline state. • The control power supply of the driver is not turned on.
Blinking	Unlit	In an online state. Connection with the scanner is not established.
Lit	Unlit	In an online state. Connection with the scanner is being established.
Unlit	Blinking	Connection with the scanner became time-out.
Unlit	Lit	The setting of an IP address is duplicated in the same system.
Blinking alternately		Self-diagnosis when turning on the power is executing.

The timing to blink the LED is as follows.

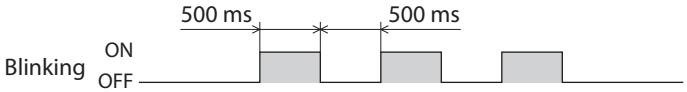

■ L/A LED

This LED indicates the LINK/ACT status of EtherNet/IP.

LED status	Description
Unlit	• In an offline state. • The frame of EtherNet/IP is not sent and received.
Blinking	• In an online state. • The frame of EtherNet/IP is sent and received.
Lit	• In an online state. • The frame of EtherNet/IP is not sent and received.

3 Installation

This chapter explains the installation location and installation method of the driver.

3-1 Installation location

The driver is designed and manufactured to be incorporated in equipment. Install it in a well-ventilated location that provides easy access for inspection. The location must also satisfy the following conditions:

- Inside an enclosure that is installed indoors (provide vent holes)
- Operating ambient temperature: 0 to +55 °C (+32 to +131 °F) (non-freezing)
- Operating ambient humidity: 85 % or less (non-condensing)
- Area free of explosive atmosphere, toxic gas (such as sulfuric gas), or liquid
- Area not exposed to direct sun
- Area free of excessive amount of dust, iron particles or the like
- Area not subject to splashing water (rain, water droplets), oil (oil droplets) or other liquids
- Area free of excessive salt
- Area not subject to continuous vibrations or excessive shocks
- Area free of excessive electromagnetic noise (from welders, power machinery, etc.)
- Area free of radioactive materials, magnetic fields or vacuum
- Up to 1,000 m (3,300 ft.) above sea level

3-2 Installation method

The driver is designed so that heat is dissipated via air convection and conduction through the enclosure. Install the driver to a flat metal plate [material: aluminum, 200×200×2 mm (7.87×7.87×0.08 in.) or equivalent] offering high heat conductivity. When installing drivers, provide clearances of at least 25 mm (0.98 in.) in the horizontal and vertical directions between the driver and enclosure or other equipment within the enclosure.
When installing the driver, use two screws (M4, not included) to secure the driver through the mounting holes.

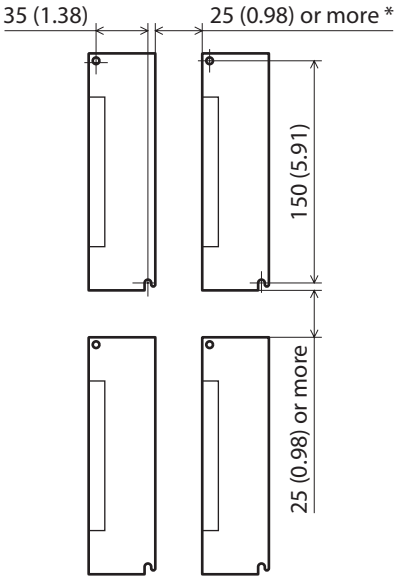

* The drivers can be installed closely in the horizontal direction when the following conditions are satisfied.
  - Metal plate [material: aluminum, 350×350×2 mm (13.78×13.78×0.08 in.) or equivalent]
  - Ambient temperature: 0 to 40 °C (+32 to +104 °F)

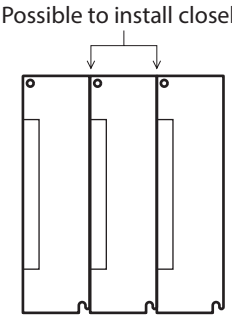

Unit: mm (in.)

Note

- Install the driver in an enclosure whose degree of protection is IP54 minimum when used in a pollution degree 3 environment.
- Do not install any equipment that generates a large amount of heat or noise near the driver.
- Do not install the driver underneath the scanner or other equipment vulnerable to heat.
- If the ambient temperature of the driver exceeds 55 °C (131 °F), reconsider the ventilation condition such as providing forced cooling by using fans or creating spaces between the drivers.
- Be sure to install the driver vertically (in vertical position).

■ Dimensions

- Unit: mm (in.)
- Mass: 0.68 kg (1.5 lb.)

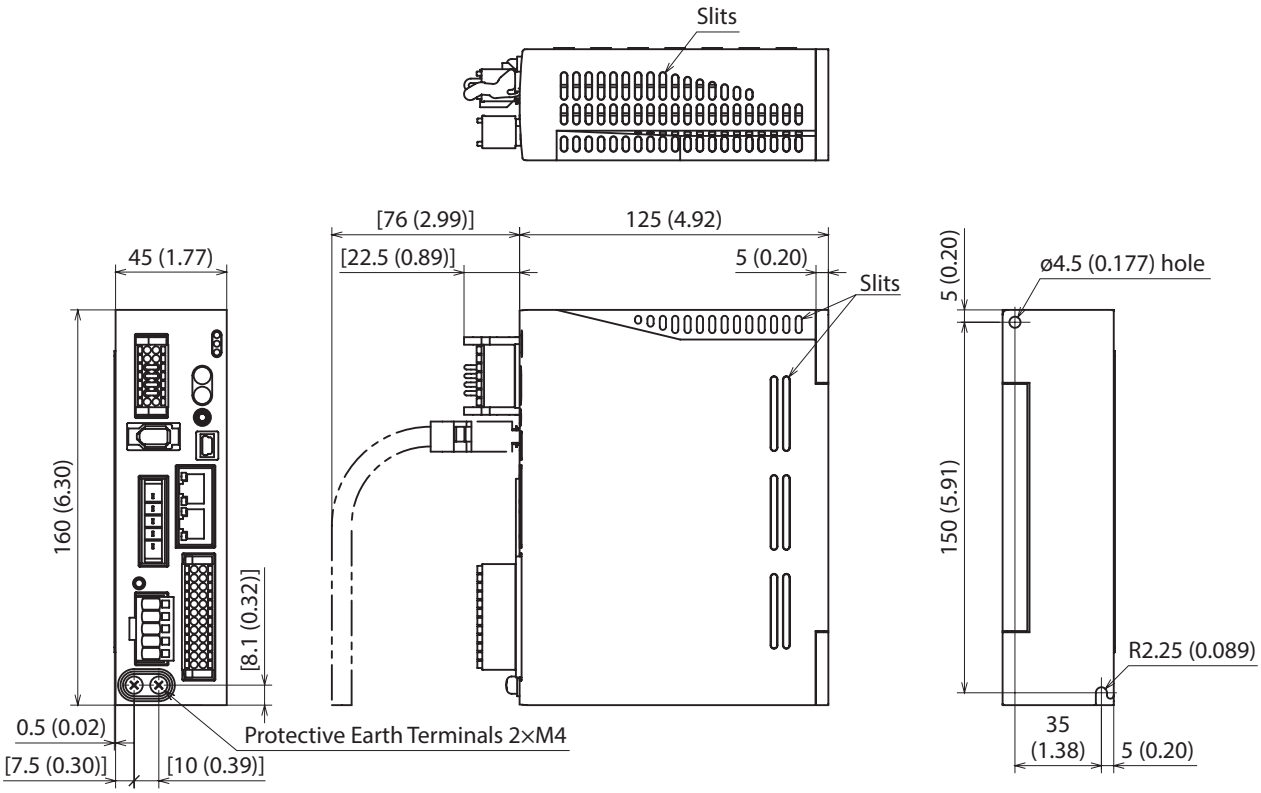

4 Connection

This chapter explains a connection example of a driver and a motor, connection methods of power supplies and the regeneration resistor **RGB100**, the grounding method, and others.
The installation and wiring methods in compliance with the EMC Directive/Regulations as well as protection against noise are also explained.

⚠WARNING

- For protection against electric shock, do not turn on the power supply until the wiring is completed.
- A high voltage is applied to the motor connector (CN3) and the main power supply input terminals (CN4). Do not touch them while the power is on. Doing so may result in fire or electric shock.

4-1 Connection example

Use connection cables of Oriental Motor to connect the motor. Check the cable models on p.53.
The figure shows an example when the cable type electromagnetic brake motor with single-phase 200-240 VAC input is used.

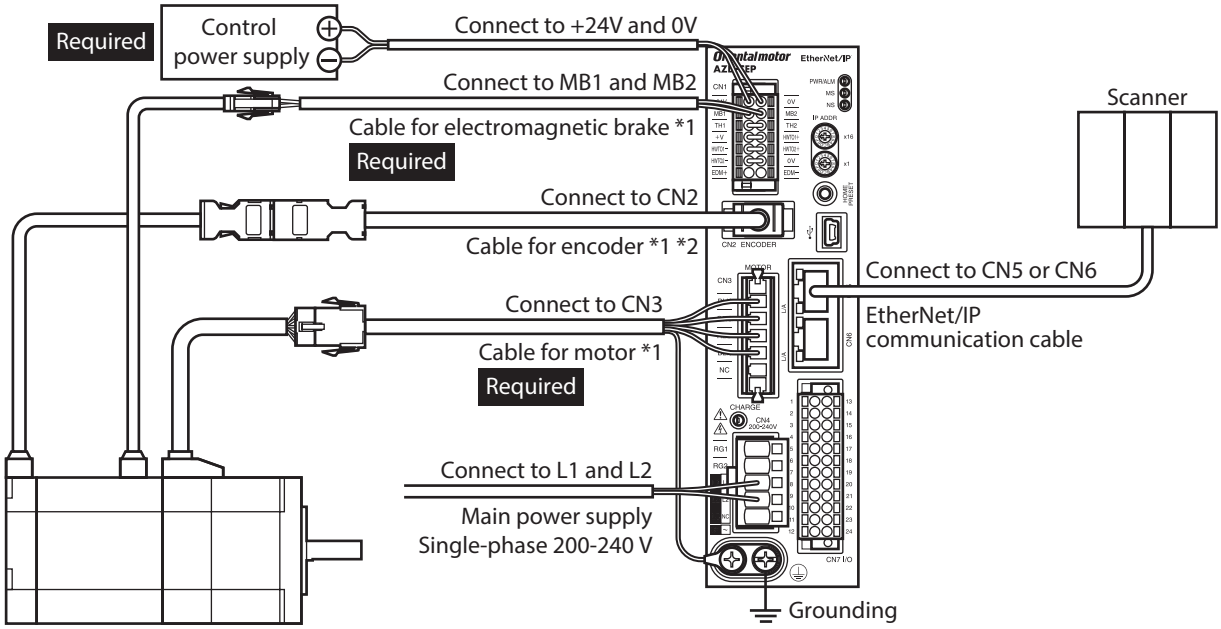

*1 These cables are provided as our products. Purchase it separately.
*2 Use the cable for encoder when the length of the encoder cable of motor is not enough.

Note

- Connect the connectors securely. Insecure connections may cause malfunction or damage to the motor or driver.
- Before connecting or disconnecting a connector, turn off the main power supply and the control power supply, and check the CHARGE LED has been turned off. The residual voltage may cause electric shock.
- The lead wires of the "cable for electromagnetic brake" have polarities, so connect them in the correct polarities. If the lead wires are connected with their polarities reversed, the electromagnetic brake will not operate properly.
- Do not wire the power supply cable of the driver in the same cable duct with other power lines or motor cable. Doing so may cause malfunction due to noise.
- Keep the wiring distance between the motor and the driver equal to or less than the following values. Exceeding the following wiring distance may cause the driver to generate heat or increase the electrical noise emitted from the product.
  Cable type: 20 m (65.6 ft.)
  Connector type: 10 m (32.8 ft.)

memo
- A control power supply is required with or without an electromagnetic brake. Be sure to connect it.
- When pulling off the motor cable, do so while pressing the latches on the connector with fingers.
- When installing the motor on a moving part, use a flexible cable. Refer to p.53 for the model name.

■ Electrical wire size

Connector	Terminal symbol	Recommended wire size
CN1	+24V, 0V, MB1, MB2, TH1, TH2, HWTO1+, HWTO1–, HWTO2+, HWTO2–, EDM+, EDM–	Stranded wire or solid wire AWG24 to 16 (0.2 to 1.25 mm^2)
CN4	RG1, RG2, L, N, L1, L2, L3	Stranded wire or solid wire AWG18 to 14 (0.75 to 2.0 mm^2)
CN7	–	Stranded wire or solid wire AWG24 to 16 (0.2 to 1.25 mm^2)

4-2 Connecting the control power supply

■ Pin assignment

There are two terminals for 0 V: One for control power supply and the other is for internal connection. Check each position in the figure and table shown.

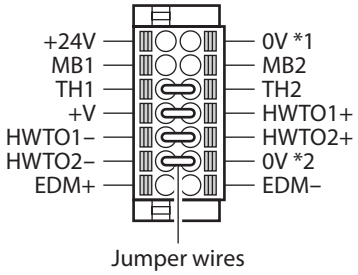

Sign	Description
+24V, 0V *1	Connects the control power supply.
MB1, MB2	Connects the lead wires from the electromagnetic brake. MB1: Electromagnetic brake– (Black) MB2: Electromagnetic brake+ (White)
TH1, TH2	Connects the signal lines of our regeneration resistor **RGB100**. If the regeneration resistor is not used, connect a jumper wire between the terminals to short-circuit as shown in the figure.
HWTO1+, HWTO1– HWTO2+, HWTO2–	Connects the external device. When using the power removal function, remove the jumper wires and connect the external device. If the power removal function is not used, connect jumper wires between the terminals to short-circuit as shown in the figure.
EDM+, EDM–	Connects the external device. If the power removal function is not used, do not connect anything.
+V, 0V *2	These are for internal connection. Do not connect anything. If the power removal function is not used, connect a jumper wire between the terminals to short-circuit as shown in the figure.

■ Wiring method of CN1 connector

- Applicable lead wire: AWG24 to 16 (0.2 to 1.25 mm^2)
- Stripping length of wire insulation: 10 mm (0.39 in.)

1. Strip the insulation of the lead wire.
2. Insert the lead wire while pushing the button of the orange color with a slotted screwdriver.
3. After having inserted, release the button to secure the lead wire.

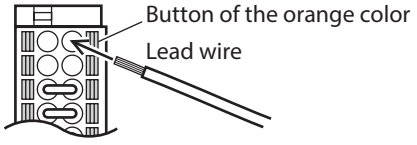

■ Power supply current capacity

Input power supply voltage	Power supply current capacity	
	Without electromagnetic brake	With electromagnetic brake
24 VDC±5 % *1	0.25 A	0.5 A *2

*1 When an electromagnetic brake motor is used, if the wiring distance between the cable type motor and the driver is extended to 20 m (65.6 ft.) using our cable, the input voltage is 24 VDC±4 %.
*2 The **AZM46** type is 0.33 A.

4-3 Connecting the regeneration resistor

If vertical drive (gravitational operation) such as elevating applications is performed or if sudden start-stop operation of a large inertia is repeated frequently, connect our regeneration resistor **RGB100**.

- The two thin lead wires (AWG22: 0.3 mm^2) of the regeneration resistor are the thermostat outputs. Connect them to the TH1 and TH2 using the CN1 connector.
- Regenerative current flows through the two thick lead wires (AWG18: 0.75 mm^2) of the regeneration resistor. Connect them to the RG1 and RG2 using the CN4 connector.

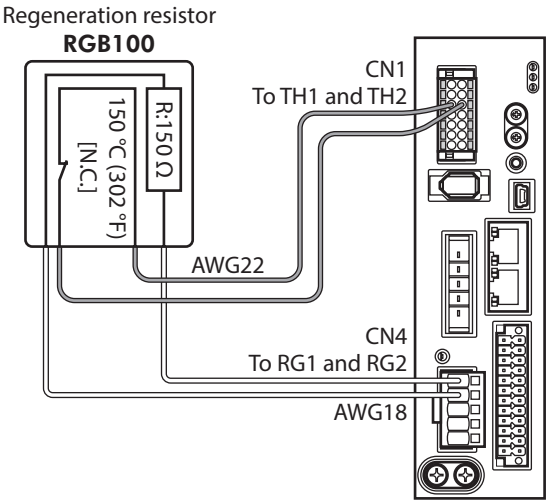

Note A sticker is placed on RG1 and RG2 of the CN4 connector to prevent incorrect wiring. Remove the sticker only when connecting the regeneration resistor.
Incorrectly connecting the lead wires of the main power supply may result in damage to the product.

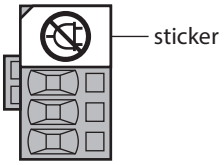

memo
- When connecting the regeneration resistor, be sure to remove the jumper wire from the CN1 connector.
- If the allowable power consumption of the regeneration resistor exceeds the allowable level, the thermostat will be triggered to generate an alarm of regeneration resistor overheat. When an alarm of regeneration resistor overheat is generated, turn off the main power supply and check the error content.

● Regeneration resistor specifications

Model	**RGB100**
Allowable power consumption	Continuous regenerative power: 50 W * Instantaneous regenerative power: 600 W
Resistance value	150 Ω
Thermostat operating temperature	Operation: Opens at 150±7 °C (302±12.6 °F) Reset: Closes at 145±12 °C (293±21.6 °F) [normally closed]
Thermostat electrical rating	120 VAC 4 A or 30 VDC 4A (minimum current 5 mA)

* Install the regeneration resistor in a location where heat dissipation capacity equivalent to a level achieved with a aluminum plate [350×350×3 mm (13.78×13.78×0.12 in.)] is ensured.

4-4 Connecting the main power supply

The connecting method varies depending on the power supply specification.

Note Do not connect the lead wires of the main power supply to the regeneration resistor connection terminals (RG1, RG2). Doing so may result in damage to the product.

Single-phase 100-120 V –15 % to +6 % 50/60 Hz

Connect to L and N

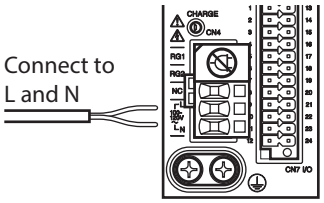

Single-phase 200-240 V –15 % to +6 % 50/60 Hz

Connect to L1 and L2

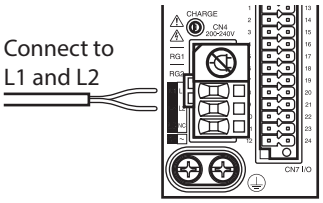

Three-phase 200-240 V –15 % to +6 % 50/60 Hz

Connect to L1, L2 and L3

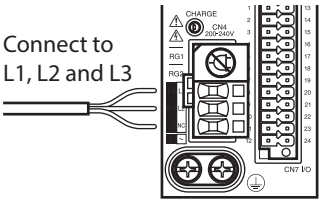

■ Wiring method of CN4 connector

- Applicable lead wire: AWG18 to 14 (0.75 to 2.0 mm^2)
- Stripping length of wire insulation: 9 mm (0.35 in.)

1. Strip the insulation of the lead wire.
2. Insert the connector lever.
3. Insert the lead wire while pushing down the connector lever.

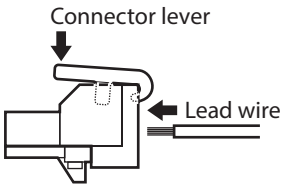

■ Power supply current capacity

The current capacity of the power supply varies depending on the product combined.
Check the current capacity in reference to the equipped motor model when using the **EAS** Series, **EAC** Series, **EZS** Series, or **EZSH** Series.
The box (☐) in the model indicates an alphabet (**B**, **M**, or **R**) representing the shape of the actuator.

● **Single-phase 100-120 VAC**

Model	Power supply current capacity
AZM46	2.7 A or more
AZM48	2.7 A or more
AZM66	3.8 A or more
AZM69	5.4 A or more
AZM98	5.5 A or more
AZM911	6.4 A or more
DG☐85	2.7 A or more
DG☐130	3.8 A or more
DG☐200	6.4 A or more
LM2	3.8 A or more
LM4	3.8 A or more

● **Single-phase 200-240 VAC**

Model	Power supply current capacity
AZM46	1.7 A or more
AZM48	1.6 A or more
AZM66	2.3 A or more
AZM69	3.3 A or more
AZM98	3.3 A or more
AZM911	3.9 A or more
DG☐85	1.7 A or more
DG☐130	2.3 A or more
DG☐200	3.9 A or more
LM2	2.3 A or more
LM4	2.3 A or more

● **Three-phase 200-240 VAC**

Model	Power supply current capacity
AZM46	1.0 A or more
AZM48	1.0 A or more
AZM66	1.4 A or more
AZM69	2.0 A or more
AZM98	2.0 A or more
AZM911	2.3 A or more
DG☐85	1.0 A or more
DG☐130	1.4 A or more
DG☐200	2.3 A or more
LM2	1.4 A or more
LM4	1.4 A or more

4-5 Grounding the driver

Two Protective Earth Terminals (screw size: M4) are provided on the driver. Be sure to ground one of the Protective Earth Terminals. Either of the two Protective Earth Terminals can be used for grounding the driver.

- Grounding wire: AWG16 to 14 (1.25 to 2.0 mm^2)
- Tightening torque: 1.2 N·m (170 oz-in)

Connect the grounding wire of the "cable for motor" to the other terminal to ground the motor.
Do not share the grounding wire with a welder or any other power equipment.
When grounding the Protective Earth Terminal, use a round terminal and secure the grounding point near the driver.

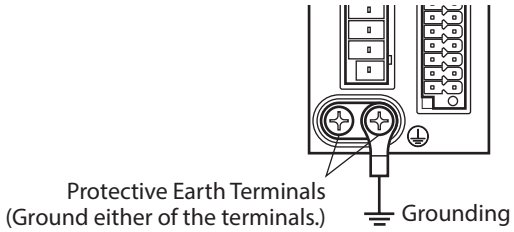

4-6 Connecting the EtherNet/IP communication cable

Connect the EtherNet/IP communication cable to the EtherNet/IP communication connector (CN5, CN6).

■ Pin assignment

Signal name	Description
TXP	Transmitted data+
TXN	Transmitted data–
RXP	Received data+
N.C.	–
N.C.	–
RXN	Received data–
N.C.	–
N.C.	–

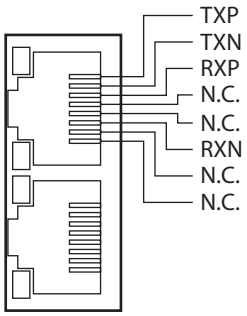

4-7 Connecting the USB cable

Using a USB cable of the following specification, connect a PC in which the **MEXE02** has been installed to the USB communication connector.

Specification	USB2.0 (full speed)
Cable	Length: 3 m (9.8 ft.) or less Shape: A to mini B

memo

- Connect the driver and PC directly using the USB cable.
- In large electrically noisy environments, use the USB cable with a ferrite core or install a ferrite core to the USB cable.

4-8 Connecting the I/O signals

Connect when using direct I/O or sensors.

■ Pin assignment

Pin No.	Signal name *	Description *
1	CW+ [PLS+]	CW pulse input + [Pulse input +]
2	CCW+ [DIR+]	CCW pulse input + [Rotation direction switching input +]
3	IN0	Control input 0 (ZHOME)
4	IN2	Control input 2 (STOP)
5	IN-COM 0-3	IN0 to IN3 inputs common
6	IN4	Control input 4 (FW-JOG)
7	OUT0	Control output 0 (HOME-END)
8	OUT2	Control output 2 (PLS-RDY)
9	OUT4	Control output 4 (MOVE)
10	OUT-COM	Output common
11	ASG+	Phase A pulse output +
12	BSG+	Phase B pulse output +

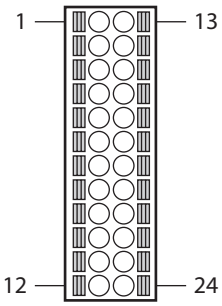

Pin No.	Signal name *	Description *
13	CW– [PLS–]	CW pulse input – [Pulse input –]
14	CCW– [DIR–]	CCW pulse input – [Rotation direction switching input –]
15	IN1	Control input 1 (FREE)
16	IN3	Control input 3 (ALM-RST)
17	IN-COM 4-5	IN4, IN5 inputs common
18	IN5	Control input 5 (RV-JOG)
19	OUT1	Control output 1 (IN-POS)
20	OUT3	Control output 3 (READY)
21	OUT5	Control output 5 (ALM-B)
22	GND	GND
23	ASG–	Phase A pulse output –
24	BSG–	Phase B pulse output –

* Values in brackets [ ] are signals when the 1-pulse input mode is set.
  Values in parentheses ( ) are initial values.

■ Wiring method of CN7 connector

- Applicable lead wire: AWG24 to 16 (0.2 to 1.25 mm^2)
- Stripping length of wire insulation: 10 mm (0.39 in.)

1. Strip the insulation of the lead wire.
2. Insert the lead wire while pushing the button of the orange color with a slotted screwdriver.
3. After having inserted, release the button to secure the lead wire.

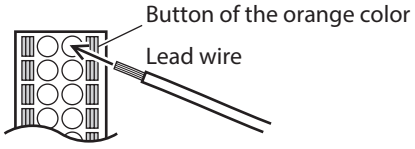

memo Be certain the I/O signal cable is as short as possible. The maximum input frequency will decrease as the cable length increases.

■ Connection example with a current sink output circuit

● **When the pulse input circuit of the driver is of line driver type**

The pin No.1, No.2, No.13, and No.14 are only available to the pulse input. Other functions cannot be assigned.

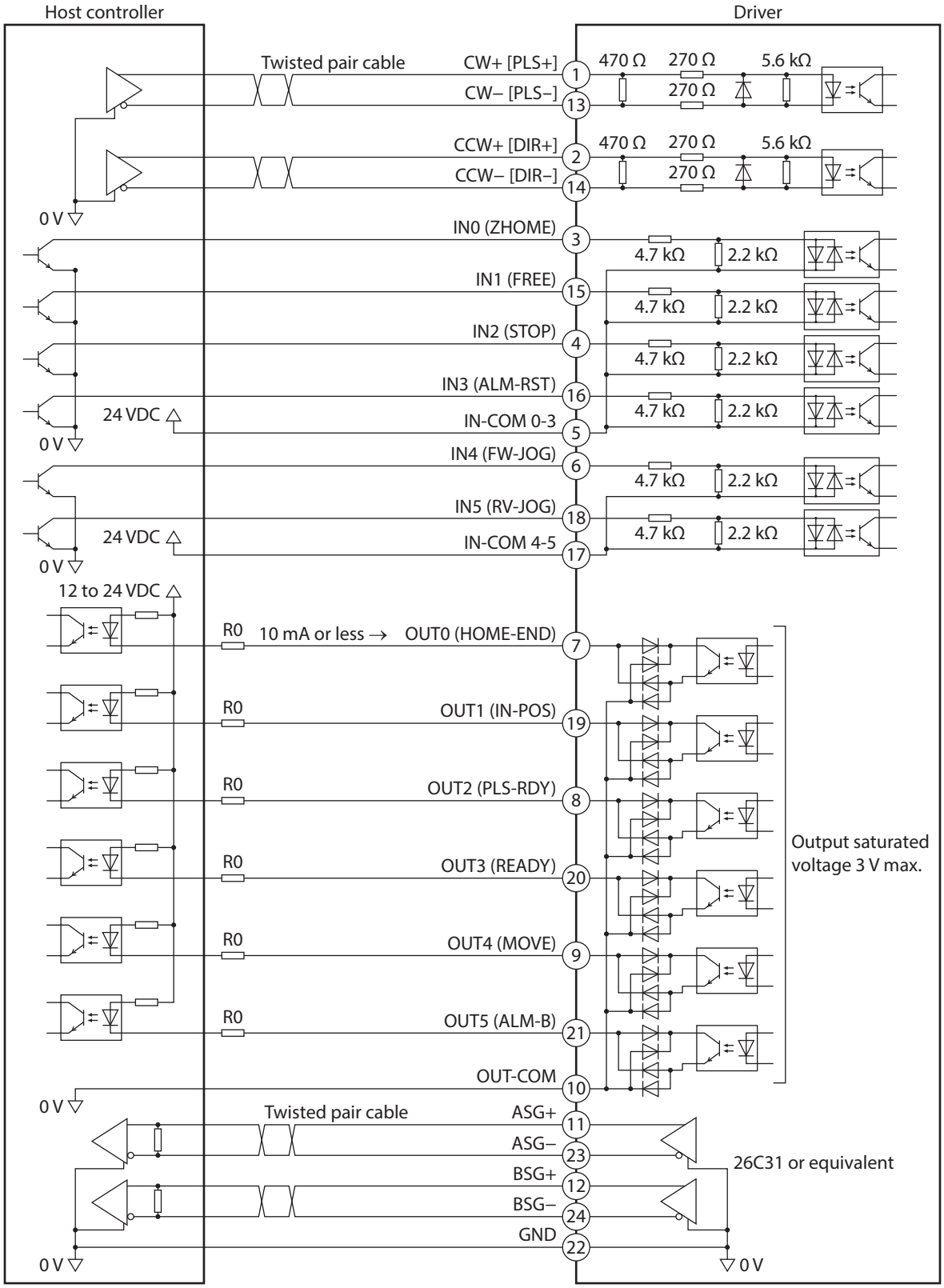

* Values in brackets [ ] are signals when the 1-pulse input mode is set.
Values in parentheses ( ) are initial values.

memo
- Use input signals at 24 VDC.
- Use output signals at 12 to 24 VDC, 10 mA or less. If the current exceeds 10 mA, connect an external resistor R0 so that the current becomes 10 mA or less.
- The saturated voltage of the output signal is 3 V maximum.

● **When the pulse input circuit of the driver is of open collector type**

The pin No.1, No.2, No.13, and No.14 are only available to the pulse input. Other functions cannot be assigned.

memo Use the CW [PLS] input and CCW [DIR] input at 5 to 24 VDC. When using signals at 24 VDC, connect an external resistor R1 (1.2 kΩ to 2.2 kΩ, 0.5 W or more). When using signals at 5 VDC, apply the voltage directly.

When the voltage of pulse input signals is 5 VDC

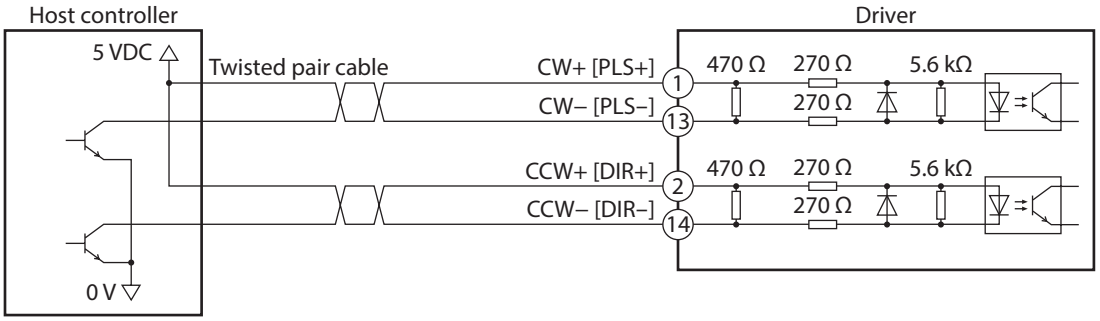

* Values in brackets [ ] are signals when the 1-pulse input mode is set.

When the voltage of pulse input signals is 24 VDC

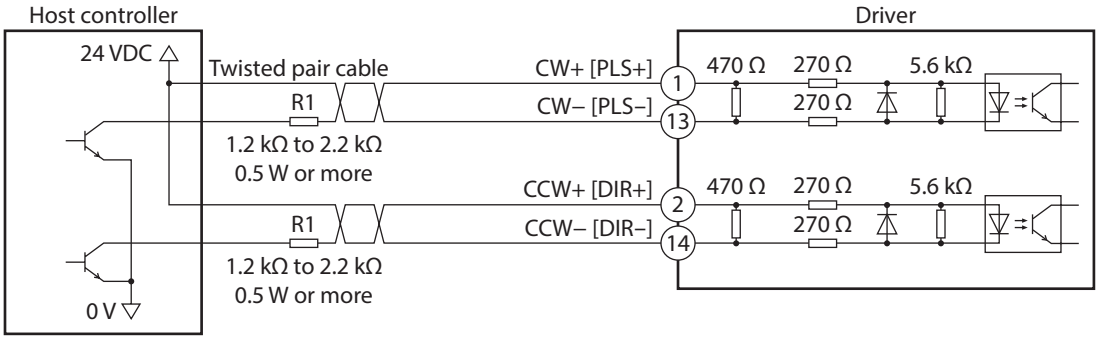

* Values in brackets [ ] are signals when the 1-pulse input mode is set.

■ Connection example with a current source output circuit

● **When the pulse input circuit of the driver is of line driver type**

The pin No.1, No.2, No.13, and No.14 are only available to the pulse input. Other functions cannot be assigned.

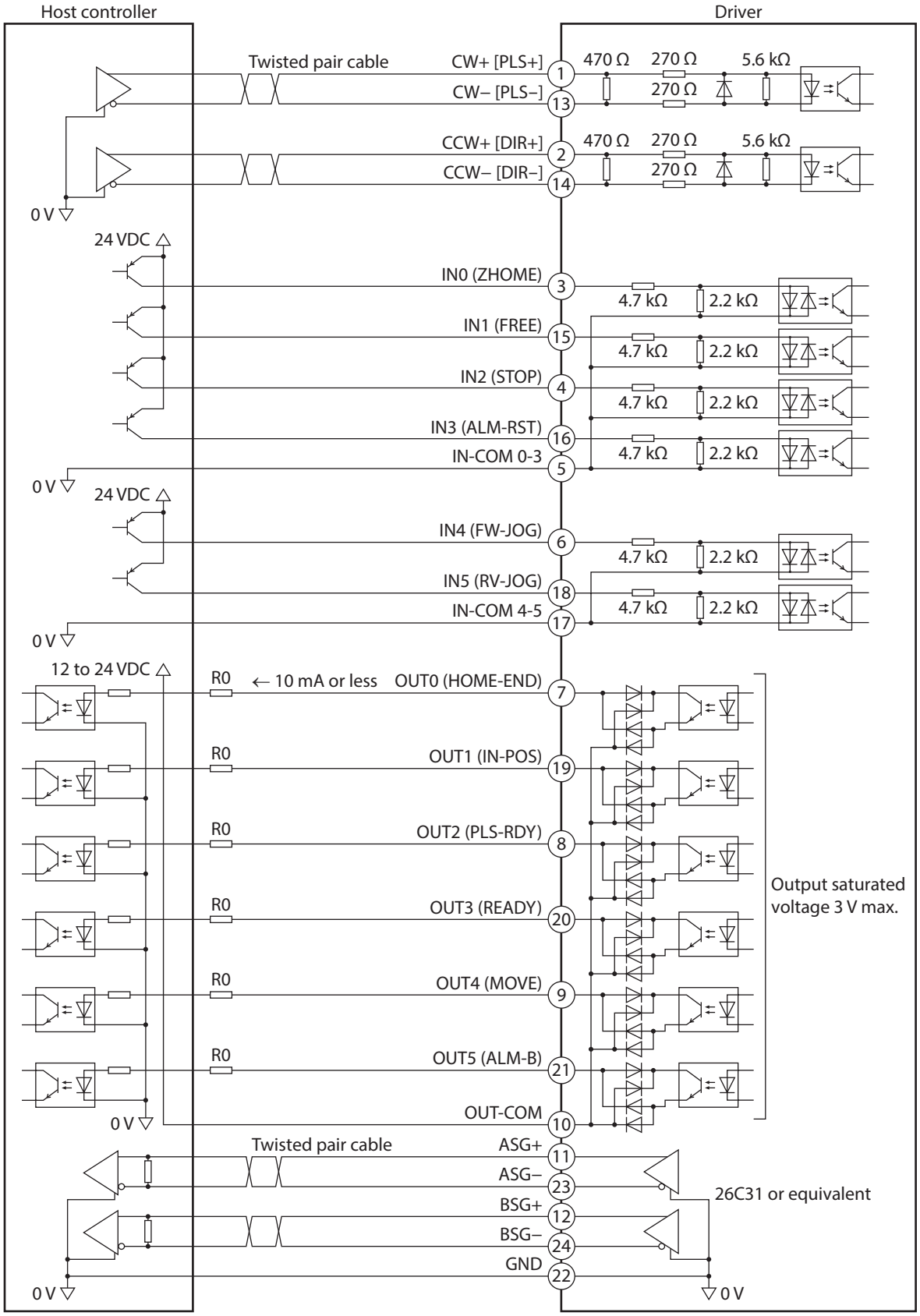

* Values in brackets [ ] are signals when the 1-pulse input mode is set.
Values in parentheses ( ) are initial values.

memo
- Use input signals at 24 VDC.
- Use output signals at 12 to 24 VDC, 10 mA or less. If the current exceeds 10 mA, connect an external resistor R0 so that the current becomes 10 mA or less.
- The saturated voltage of the output signal is 3 V maximum.

● **When the pulse input circuit of the driver is of open collector type**

The pin No.1, No.2, No.13, and No.14 are only available to the pulse input. Other functions cannot be assigned.

memo Use the CW [PLS] input and CCW [DIR] input at 5 to 24 VDC. When using signals at 24 VDC, connect an external resistor R1 (1.2 kΩ to 2.2 kΩ, 0.5 W or more). When using signals at 5 VDC, apply the voltage directly.

When the voltage of pulse input signals is 5 VDC

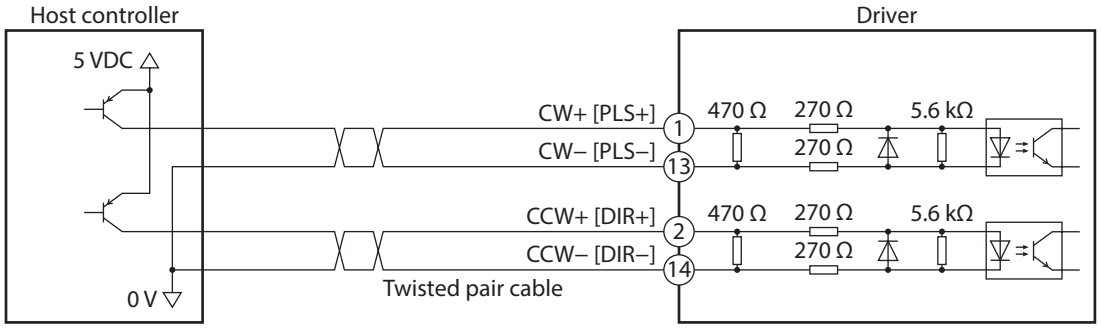

* Values in brackets [ ] are signals when the 1-pulse input mode is set.

When the voltage of pulse input signals is 24 VDC

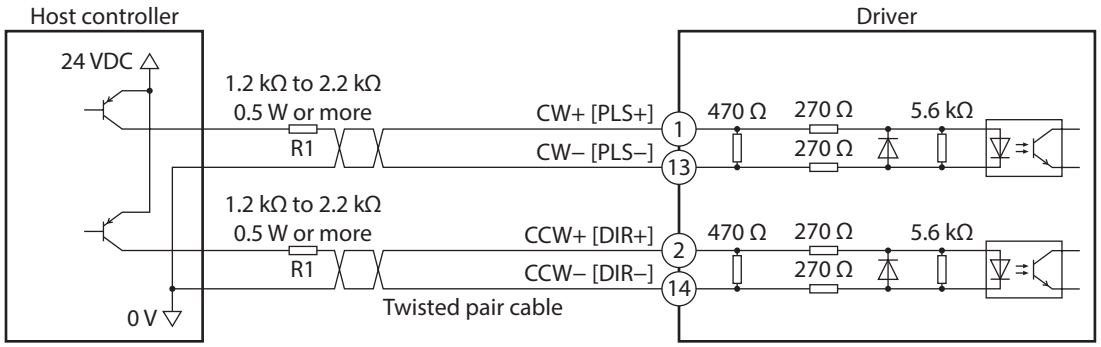

* Values in brackets [ ] are signals when the 1-pulse input mode is set.

4-9 Noise elimination measures

There are two types of electrical noises: One is a noise to invade into the driver from the outside and cause the driver malfunction, and the other is a noise to emit from the driver and cause peripheral equipment malfunction.
For the noise that is invaded from the outside, take measures to prevent the driver malfunction. It is needed to take adequate measures because signal lines are very likely to be affected by the noise.
For the noise that is emitted from the driver, take measures to suppress it.

■ Measures against electrical noise

There are the following three methods mainly to take measures against the electrical noise.

● Noise suppression

- When relays or electromagnetic switches are used, use noise filters or CR circuits to suppress surge generated by them.
- Use our connection cable when extending the wiring distance between the motor and the driver. Refer to p.53 for the model name. This is effective in suppressing the electrical noise emitted from the motor.
- Cover the driver by a metal plate such as aluminum. This is effective in shielding the electrical noise emitted from the driver.

● Prevention of noise propagation

- Connect a noise filter to the power supply cable of the driver.
- Place the power lines, such as the motor and the power supply cables, keeping a distance of 200 mm (7.87 in.) or more from the signal lines, and also do not bundle them or wire them in parallel. If a power cable and a signal cable have to cross, cross them at a right angle.
- Use shielded twisted pair cables for power lines and signal lines.
- Keep cables as short as possible without coiling and bundling extra lengths.
- Grounding multiple points will increase effect to block electrical noise because impedance on the grounding points is decreased. However, ground them so that a potential difference does not occur among the grounding points. I/O signal cable that includes a ground wire are provided in our product line. Refer to p.57 for the model name.
- To ground a shielded cable, use a metal cable clamp that can maintain contact with the entire circumference of the shielded cable, and ground as near the product as possible.

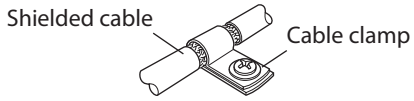

● Suppression of effect by noise propagation

- Loop the noise propagated cable around a ferrite core. Doing so will prevent the propagated noise invades into the driver or emits from the driver. The frequency band in which an effect by the ferrite core can be seen is generally 1 MHz or more. Check the frequency characteristics of the ferrite core used. When increasing the effect of noise attenuation by the ferrite core, loop the cable a lot.
- Change the transmission method of the pulse signal to the line driver type in order to prevent noise effects. If the pulse signal of the host controller is of the open collector type, use our pulse signal converter for noise immunity. Refer to p.58 for the model name.

■ Noise suppression products

● Noise filter

- Connect the following noise filter (or equivalent) to the power line. Doing so will prevent the propagated noise through the power line. Install the noise filter as close to the driver as possible.

Manufacturer	Single-phase 100-120 VAC Single-phase 200-240 VAC	Three-phase 200-240 VAC
SOSHIN ELECTRIC CO., LTD.	HF2010A-UPF	HF3010C-SZA
Schaffner EMC	FN2070-10-06	FN3025HP-10-71

- Use the AWG18 (0.75 mm^2) or thicker wire for the input and output cables of the noise filter, and secure firmly using a cable clamp or others so that the cable does not come off the enclosure.
- Place the input cable as far apart as possible from the output cable, and do not wire the cables in parallel. If the input and output cables are placed at a close distance or if they are wired in parallel, the noise in the enclosure affects the power cable through stray capacitance, and the noise suppressing effect will reduce.
- Connect the ground terminal of the noise filter to the grounding point, using as thick and short a wire as possible.
- When connecting a noise filter inside an enclosure, wire the input cable of the noise filter as short as possible. Wiring in long distance may reduce the noise suppressing effect.

■ Our noise suppression products

Check the model names on p.57 and p.58.

- **I/O signal cable**

  This is a shielded cable for good noise immunity to connect the driver and host controller. The ground wire useful to grounding is extracted from both ends of the cable. The EMC testing is conducted using our I/O signal cable.

- **Pulse signal converter for noise immunity**

  This product converts a pulse signal, which is output from the open collector output, to a pulse signal for good noise immunity by outputting the pulse signal again from the differential output.

- **Surge suppressor**

  This product is effective to suppress the surge which occurs in a relay contact part. Connect it when using a relay or electromagnetic switch. CR circuit for surge suppression and CR circuit module are provided.

4-10 Conformity to the EMC Directive/Regulations

Effective measures must be taken against the EMI that the motor and the driver may give to adjacent control-system equipment, as well as the EMS of the motor and the driver itself, in order to prevent a serious functional impediment in the machinery. The use of the following installation and wiring methods will enable the motor and the driver to be compliant with the EMC Directive/Regulations.
Oriental Motor conducts EMC testing on its motors and drivers in accordance with "Example of installation and wiring" on p.38
The user is responsible for ensuring the machine's compliance with the EMC, based on the installation and wiring explained next.

⚠CAUTION This equipment is not intended for use in residential environments nor for use on a low-voltage public network supplied in residential premises, and it may not provide adequate protection to radio reception interference in such environments.

- **Connecting the noise filter**

  In large electrically noisy environments, connect a noise filter. Refer to "Noise filter" on p.36 for details.

- **Connecting the control power supply**

  Use a DC power supply compliant with the EMC Directive/Regulations for the control power supply.
  Wire and ground the power supply over the shortest possible distance using a shielded cable.
  Refer to "Prevention of noise propagation" on p.36 for how to ground the shielded cable.

- **Connecting the motor cable**

  Use our connection cable when extending the wiring distance between the motor and the driver. Refer to p.53 for the model name.

- **Connecting the signal cable**

  Refer to "Prevention of noise propagation" on p.36.

- **Grounding method**
  - The cable used to ground the motor, the driver, and the noise filter must be as thick and short as possible so that no potential difference is generated.
  - Choose a large, thick and uniformly conductive surface for the grounding point.
  - When installing the motor and the driver, ground their Protective Earth Terminals. Refer to the p.30 for how to ground the driver.

● Example of installation and wiring

Use connection cables of Oriental Motor to connect the motor. Check the cable models on p.53.
The figure shows an example when the cable type electromagnetic brake motor is used.
The line driver system is used to drive the pulse signals.

Note The driver uses parts that are sensitive to electrostatic charge. Take measures against static electricity since static electricity may cause the driver to malfunction or suffer damage.

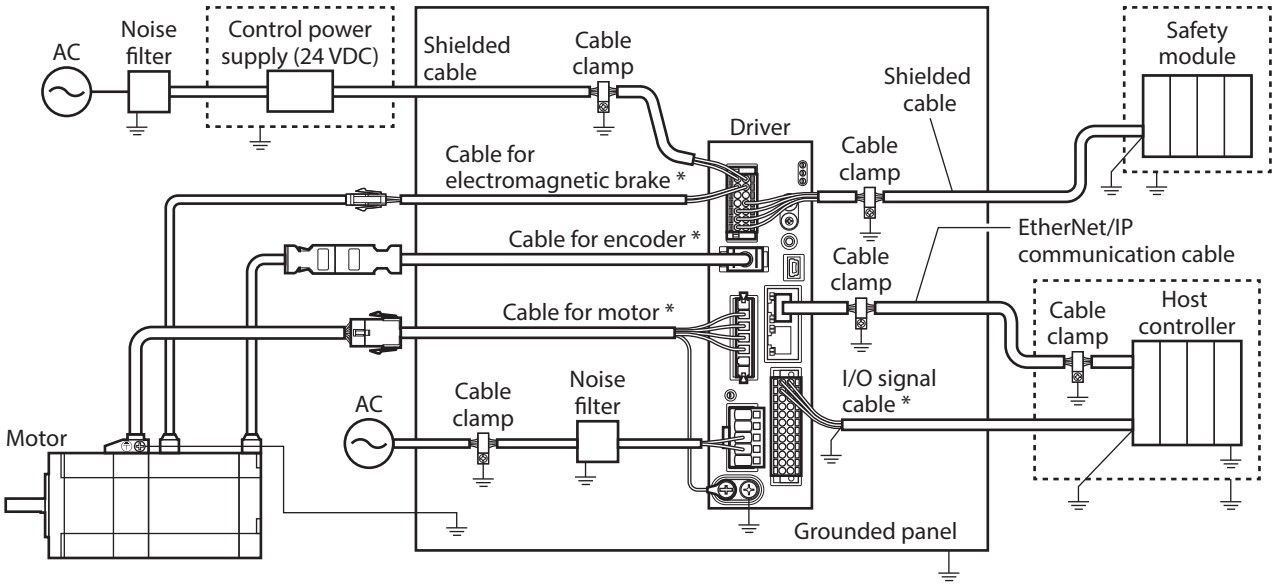

⏚ symbol indicate the grounding.
--- is a shielded box.
* It is the cable in our products.

For the connector type motor with an 85 mm (3.35 in.) frame size, the EMC test is conducted in a state where a ferrite core is installed to the following position.

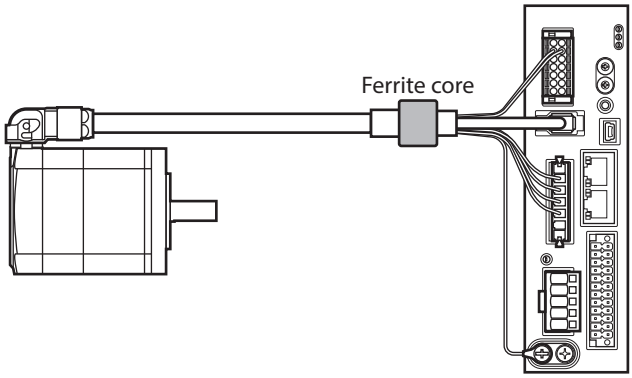

5 Setting of IP address

The IP address, subnet mask, and default gateway are configured respectively as follows.

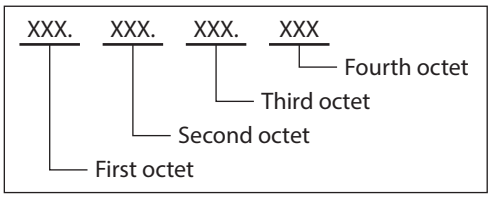

The IP address is set using the switches on the driver, parameters, and the DHCP server. Items that can be set vary depending on the setting method.

• When using the IP address setting switches

IP address	XXX.	XXX.	XXX.	XXX	← Set with the IP address setting switches
Subnet mask	XXX.	XXX.	XXX.	XXX	← Set with parameters or DHCP server
Default gateway	XXX.	XXX.	XXX.	XXX	

• When setting with parameters or DHCP server

IP address	XXX.	XXX.	XXX.	XXX	
Subnet mask	XXX.	XXX.	XXX.	XXX	← Set all items with parameters or DHCP server
Default gateway	XXX.	XXX.	XXX.	XXX	

5-1 When using the IP address setting switches

Set the IP address with the IP address setting switches of the driver, and the subnet mask and default gateway with the parameters.

■ Setting of IP address

Set the fourth octet of the IP address using two IP address setting switches (IP ADDR ×16, ×1).
The IP address setting switches are hexadecimal number. Convert the IP address from decimal to hexadecimal to set.

Factory setting: ×16: 0, ×1: 0 (Setting of parameter or DHCP server is enabled)

Setting example

Setting of switches		Value of IP address	Note
×16	×1		
0	0	The setting of the parameter or DHCP server is enabled.	Whether either the parameter or the DHCP server is enabled can be checked with the "Configuration control" parameter.
0	1	XXX.XXX.XXX.1	The fourth octet is set to "1."
F	E	XXX.XXX.XXX.254	The fourth octet is set to "254."
F	F	192.168.1.1	This value is applied regardless of the setting of the parameter and DHCP server.

Note

- When the switches were set, turn on the control power supply again. The new setting will be enabled when the control power supply is turned on again.
- When connecting two or more EtherNet/IP compatible products, set so that an IP address is not duplicated. If an IP address is duplicated, a communication error of the "IP address conflict" is detected.

memo
- Set the first octet to third octet of the IP address with the parameters.
- If the IP address setting switches are other than "00," the "Configuration Control" parameter is automatically set to "0: Parameter."

■ Setting of subnet mask and default gateway

Set the subnet mask and the default gateway with the parameters.

Related parameters

Name	Description	Setting range	Initial value
Network mask 1	Sets the first octet of the subnet mask.	0 to 255	255
Network mask 2	Sets the second octet of the subnet mask.		255
Network mask 3	Sets the third octet of the subnet mask.		255
Network mask 4	Sets the fourth octet of the subnet mask.		0
Gateway address 1	Sets the first octet of the default gateway.	0 to 255	0
Gateway address 2	Sets the second octet of the default gateway.		0
Gateway address 3	Sets the third octet of the default gateway.		0
Gateway address 4	Sets the fourth octet of the default gateway.		0

5-2 When setting with parameters

Set the IP address setting switches of the driver to "00" and the "Configuration control" parameter to "0: Parameter." The parameters and the DHCP server cannot be used in combination.

Related parameters

Name	Description	Setting range	Initial value
Configuration control	Sets how to obtain the IP address.	0: Parameter 2: DHCP server	2
IP address 1	Sets the first octet of the IP address.	0 to 255	192
IP address 2	Sets the second octet of the IP address.		168
IP address 3	Sets the third octet of the IP address.		1
IP address 4	Sets the fourth octet of the IP address.		1
Network mask 1	Sets the first octet of the subnet mask.	0 to 255	255
Network mask 2	Sets the second octet of the subnet mask.		255
Network mask 3	Sets the third octet of the subnet mask.		255
Network mask 4	Sets the fourth octet of the subnet mask.		0
Gateway address 1	Sets the first octet of the default gateway.	0 to 255	0
Gateway address 2	Sets the second octet of the default gateway.		0
Gateway address 3	Sets the third octet of the default gateway.		0
Gateway address 4	Sets the fourth octet of the default gateway.		0

Note
When connecting two or more EtherNet/IP compatible products, set so that an IP address is not duplicated. If an IP address is duplicated, a communication error of the "IP address conflict" is detected.

5-3 When setting with DHCP server

The IP address, subnet mask and default gateway are automatically assigned from the DHCP server.
Set the IP address setting switches of the driver to "00" and the "Configuration control" parameter to "2: DHCP server."
The parameters and the DHCP server cannot be used in combination.

memo If the control power supply is shut off, the IP address obtained from the DHCP server is cleared.

Related parameter

Name	Description	Setting range	Initial value
Configuration control	Sets how to obtain the IP address.	0: Parameter 2: DHCP server	2

6 Power removal function

The power removal function is a function that stops supplying the power to the motor by the hardware.
This function shuts off the drive signal of the inverter circuit that controls the motor current with two input channels (HWTO1 input, HWTO 2 input). This brings a shutoff state of the power supplying to the motor (power removal status).
The power removal function is assumed to be used to prevent unexpected starting of the moving parts of equipment when an operator works inside the operating range of the moving parts.

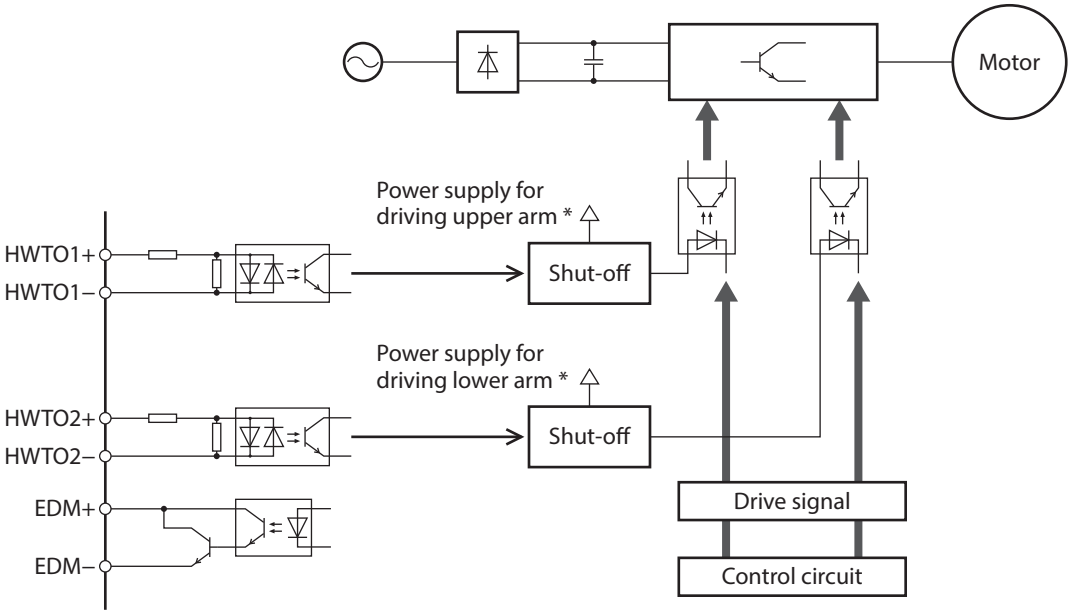

* Turning the HWTO1 input OFF causes the upper arm drive signal of the inverter circuit to shut off.
Turning the HWTO2 input OFF causes the lower arm drive signal of the inverter circuit to shut off.

Note Be sure to check the motor is in a standstill state before executing the power removal function. If the power removal function is executed while the motor is operated, it may cause damage to the motor, driver, or equipment.

6-1 Safety parameters

Item	Specifications
Safety integrity level	SIL 3 *
Average frequency of a dangerous failure per hour	PFH=2.96×10^{-9} [1/h]
Hardware fault tolerance	HFT=1
Subsystem	Type A
Mission time	10 years
Response time	15 ms or less
Performance level	PL e (Category 3) *
Mean time to dangerous failure	MTTFd: High
Average diagnostic coverage	DC_{avg}: Medium
Stop category	0 (IEC 60204-1)

* It is necessary to monitor the EDM output using an external device.

6-2 Notes when using the power removal function

- **When the power removal function is used, be sure to conduct a risk assessment of equipment in advance and check that the safety requirements of the safety-related parts of a control system are satisfied.**
- **The design of the safety-related parts of a control system using the power removal function should be performed by qualified personnel who are trained in the relevant safety standards and understand the contents of this chapter.**
- **If the power removal function operates, the motor output shaft may rotate due to external forces (such as gravity on a vertical axis). To hold the motor output shaft in position, install an external brake mechanism or equivalent. The brake mechanism of the electromagnetic brake motor is used for the purpose to hold the position. Do not use the brake mechanism of the electromagnetic brake motor for braking the motor rotation. This may result in injury or damage to equipment.**
- **If the power removal function operates, the driver stops supplying the power to the motor. However, the power supplying to the driver is not shut off, and the driver is not performed electrical insulation either. Before performing maintenance or inspection, always turn off the driver power, and check the CHARGE LED is turned off. Failure to do so may result in electric shock.**
- **If the inverter circuit is failed, the motor output shaft may rotate up to 180 degrees in an electrical angle (3.6 degrees in a mechanical angle) even when the power removal function operates. Make sure this movement does not cause hazardous situations. Failure to do so may result in injury or damage to equipment.**
- **Connect the I/O signals related to the power removal function to an external device that is certified under safety standards.**
- **Be sure to perform the verification testing of the power removal function when starting up or maintaining the equipment, or when replacing the driver. This may result in injury or damage to equipment. If the power removal function is used in an incorrect state such as incorrect wiring of I/O signals, the power removal function may not operate properly, causing hazardous situations.**

6-3 I/O signals

■ HWTO1 input, HWTO2 input

The HWTO1 input and HWTO2 input are signals to operate the power removal function.
Connect 24 VDC to the HWTO1+ and HWTO2+ terminals and 0 VDC to the HWTO1– and HWTO2– terminals.

Note Provide individual contacts for operating the HWTO1 input and the HWTO2 input.

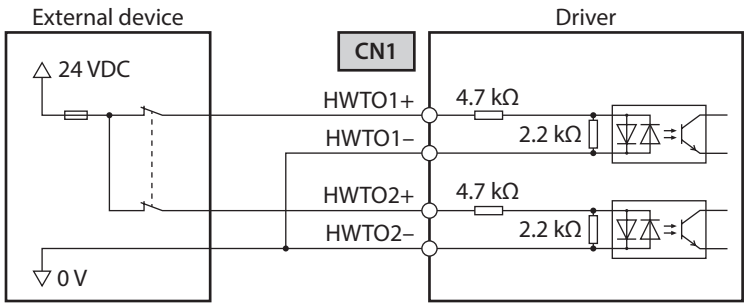

Specification

- Input voltage: 24 VDC±10 %

Safety input-off shot pulse for self-diagnosis of external device

If the safety output signal output from an external device includes the safety input-off shot pulse for self-diagnosis, use an external device which pulse width is 1 ms or less. If the OFF-time of the HWTO1 input or the HWTO2 input by the safety input-off shot pulse is 1 ms or less, the power removal function does not operate.

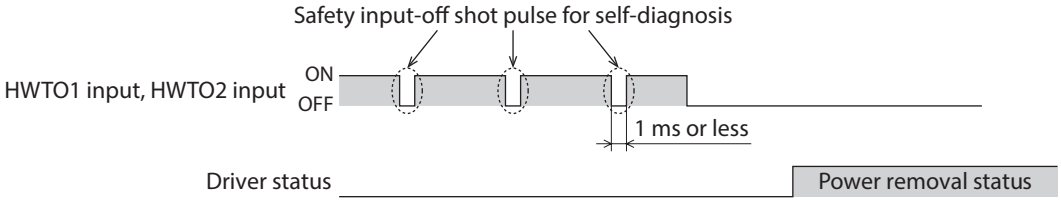

■ EDM output

The EDM output is a signal to monitor a failure in the power removal function.

Note The EDM output is not an output signal to ensure the safety. Do not use the EDM output for any other purpose except for monitoring a failure.

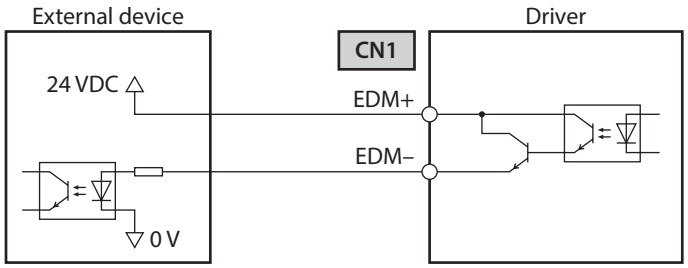

Specifications

- Voltage: 30 VDC or less
- Current: 50 mA or less
- Output saturated voltage: 1.1 V max.

6-4 Operation of power removal function

■ Transition to power removal status

If both the HWTO1 and HWTO2 inputs are turned OFF, the driver transitions to the power removal status, and the power supplying to the motor is shut off by the hardware, causing the motor to put into a non-excitation state.
In the power removal status, the status of the motor and driver will be as follows. [When the "HWTO mode selection" parameter is set to "0: Alarm is not present (initial value)"]

- The ETO-MON output is ON.
- The DCMD-RDY output, the READY output, the PLS-RDY output, and the MBC output are OFF.
- The PWR/ALM LED blinks in green.
- When an electromagnetic brake motor is used, the electromagnetic brake is in a state of holding the motor shaft.

Note

- Be sure to check the motor is in a standstill state before executing the power removal function. If the power removal function is executed while the motor is operated, it may cause damage to the motor, driver, or equipment.
- It takes 15 ms maximum from when the HWTO1 and HWTO2 inputs are turned OFF until when the driver is in the power removal status.
- To transition to the power removal status, be sure to turn the HWTO1 and HWTO2 inputs OFF for at least 15 ms.
- The ETO-MON output, the DCMD-RDY output, the READY output, the PLS-RDY output, the MBC output, the PWR/ALM LED, and the electromagnetic brake are not safety-related parts of a control system.

● **Timing chart**

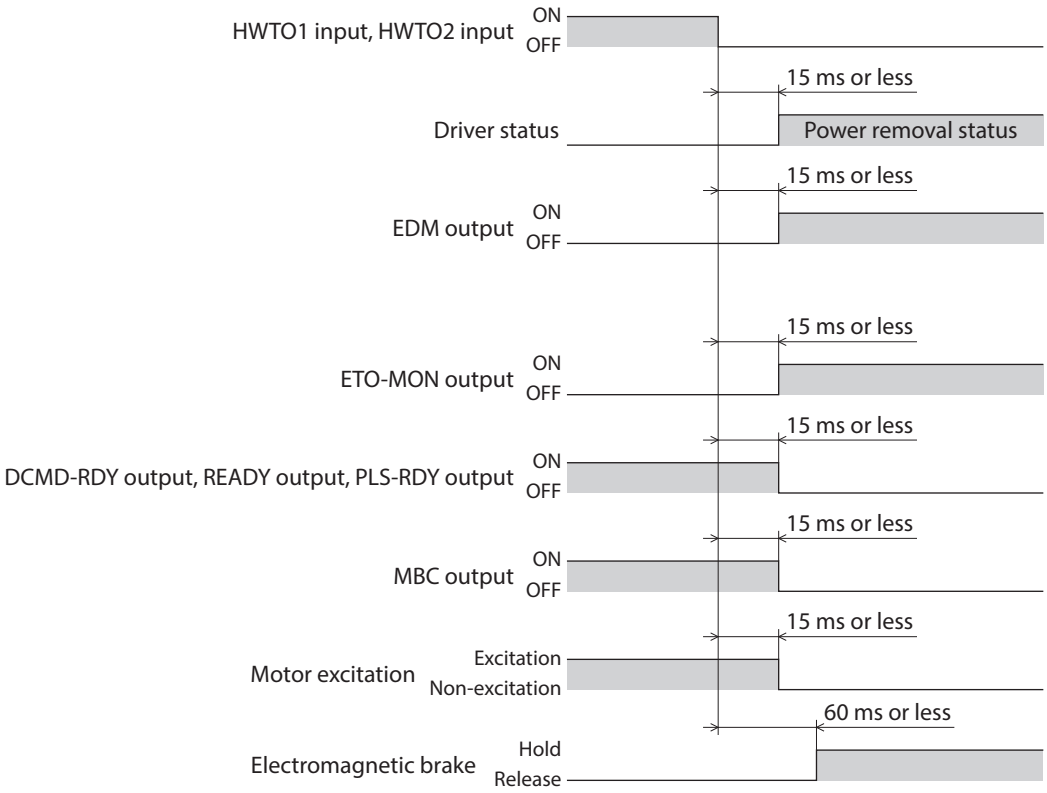

■ Return from power removal status

If both the HWTO1 and the HWTO2 inputs are turned ON, the power removal status is released. At this time, the motor remains in a non-excitation state.
To excite the motor, turn the ETO-CLR input ON (initial value: enabled at the ON edge). When the ETO-CLR input is turned ON, the status of the motor and driver will be as follows.

- The ETO-MON output is OFF.
- The DCMD-RDY output, the READY output, the PLS-RDY output, and the MBC output are ON.
- The PWR/ALM LED is lit in green.
- When an electromagnetic brake motor is used, the electromagnetic brake is in a state of releasing the motor shaft.

Note

- Check the equipment is in a safe state before returning the driver from the power removal status.
- Even if either the HWTO1 input or the HWTO2 input is turned ON, the power removal status cannot be released.
- If the ON-time of the HWTO1 and HWTO2 inputs is less than 15 ms, the power removal status may not be released.
- When the power removal status is released, a shut-off state of supplying the power to the motor by the hardware is also released.
- The ETO-CLR input is not safety-related part of a control system.

● **Timing chart**

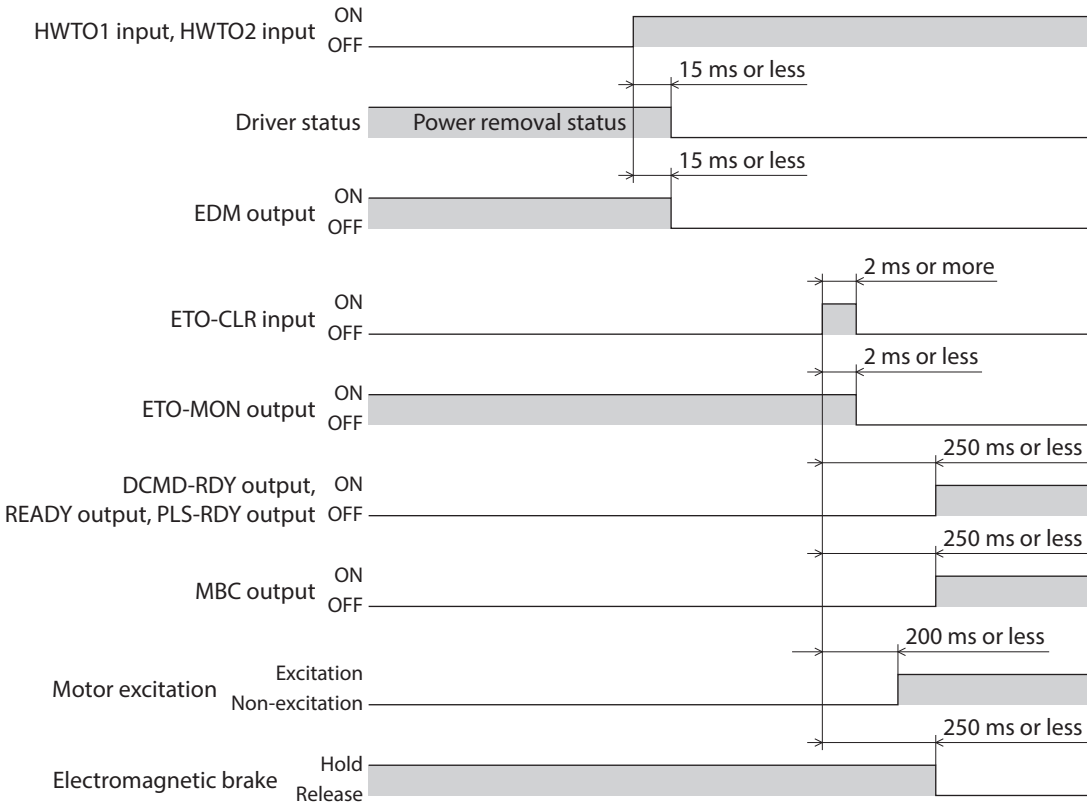

■ Detection for failure of the power removal function

Monitoring the input status of the HWTO1 and HWTO2 inputs and the output status of the EDM output relative to the inputs can detect the failure of the power removal function.
When the power removal function is properly operated, the combination of each signal is any of the following. Combinations other than the table indicate the power removal function of the driver is in a failure state.

HWTO1 input	HWTO2 input	EDM output
ON	**ON**	OFF
OFF	OFF	**ON**
ON	OFF	OFF
OFF	**ON**	OFF

If only one of the HWTO1 input and the HWTO2 input is ON or OFF, the external device or wiring has failed. Check the cause and take a measure immediately. At this time, the EDM output is in an OFF state and the motor puts into a non-excitation state.

Note

- Do not release the power removal function when the EDM output is in an OFF state.
- If the driver or external device is failed or an error in wirings occurs, check the cause and take a measure immediately.
- The power removal function of the driver is classified in Category 3 of ISO 13849-1. Not all dangerous failures can be detected with the EDM output.

6-5 Example of use

This section describes the connection method that the power removal function operates when the door (guard) is opened using a safety module.

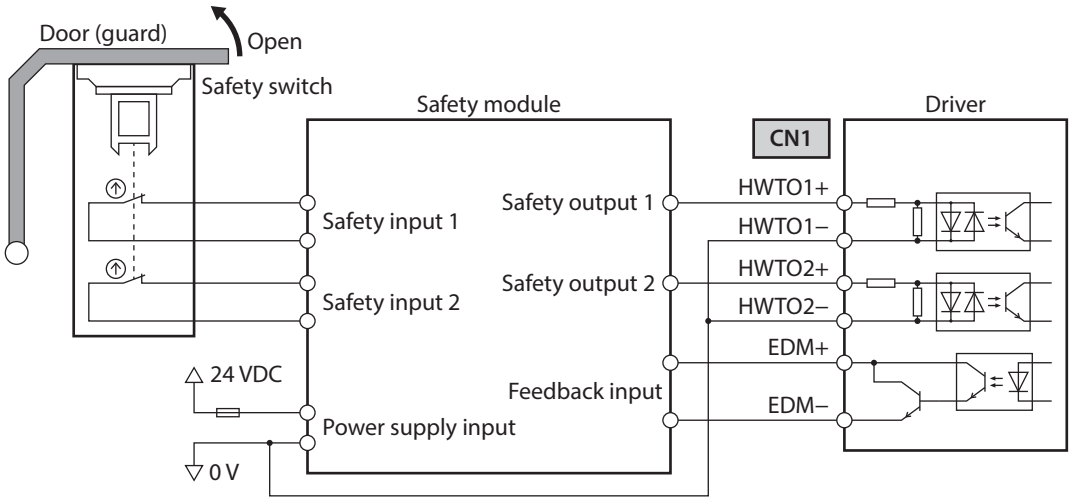

■ Operation in normal state

- **When the door (guard) is opened**

Open the door (guard).
↓
The safety input 1 and the safety input 2 of the safety module are turned OFF.
↓
The safety output 1 and the safety output 2 of the safety module are turned OFF.
↓
The HWTO1 input and the HWTO2 input of the driver are turned OFF.
↓
The power removal function operates and the EDM output is turned ON.

- **When the door (guard) is closed**

Close the door (guard).
↓
The safety input 1 and the safety input 2 of the safety module are turned ON.
↓
The safety output 1 and the safety output 2 of the safety module are turned ON because the feedback input (the EDM output of the driver) is ON.
↓
The HWTO1 input and the HWTO2 input of the driver are turned ON, and the power removal function is released.

■ How to detect a failure

If a failure that the HWTO1 input or the HWTO2 input is not turned OFF occurs, the EDM output is not turned ON. A failure can be detected because the safety module is not reset even if the door (guard) is closed and the motor cannot be started.

6-6 Verification testing of power removal function

- Be sure to perform the verification testing of the power removal function when starting up or maintaining the equipment, or when replacing the driver.
- According to use conditions of the safety related parts of a control system, perform a verification testing of the power removal function at least once three months.
- Keep the verification result on record.

■ Description of verification testing

1. Turn on the control power supply and main power supply of the driver while both the HWTO1 and HWTO2 inputs are an ON state.
   Check that the motor puts into an excitation state and the EDM output is an OFF state.
2. Turn both the HWTO1 input and the HWTO2 input OFF.
   Check that the motor puts into a non-excitation state and the EDM output is turned ON.

6-7 Related functions

Note The related functions are not safety-related parts of a control system.

- **ETO-CLR input**

If the ETO-CLR input is turned ON after both the HWTO1 and HWTO2 inputs are turned ON to release the power removal function, the motor puts into an excitation state.

Related parameter

Parameter ID		Name	Description	Initial value
Dec	Hex			
409	0199h	ETO reset action (ETO-CLR)	Sets the judgment level of the signal when the motor is excited by the ETO-CLR input. **[Setting range]** 1: ON-Edge 2: ON-Level	1

- **HWTOIN-MON output**

If the HWTO1 input or the HWTO2 input is turned OFF, the HWTOIN-MON output is turned ON.

- **ETO-MON output**

If the HWTO1 input or the HWTO2 input is turned OFF when the "HWTO mode selection" parameter is set to "0: Alarm is not present," the ETO-MON output is turned ON. If the motor is excited with the ETO-CLR input after both the HWTO1 and HWTO2 inputs are turned ON, the ETO-MON output is turned OFF.

Related parameter

Parameter ID		Name	Description	Initial value
Dec	Hex			
400	0190h	HWTO mode selection	Generates an alarm when the HWTO1 input or the HWTO2 input is turned OFF. **[Setting range]** 0: Alarm is not present 1: Alarm is present	0

- **EDM-MON output**

If both the HWTO1 and HWTO2 inputs are turned OFF, the EDM-MON output is turned ON.

Note Be sure to use the EDM output of CN1 to detect the failure of the power removal function.

- **Alarm of HWTO input detection**

If the "HWTO mode selection" parameter is set to "1: Alarm is present," an alarm will be generated when either the HWTO1 input or the HWTO2 input is turned OFF. (HWTO input detection, alarm code 68h)
At this time, the PWR/ALM LED blinks once in red repeatedly.
When the "HWTO mode selection" parameter is set to "1: Alarm is present," the motor can be excited if the ALM-RST input is turned from OFF to ON after the power removal function is released. (It is enabled at the ON edge.)

Related parameter

Parameter ID		Name	Description	Initial value
Dec	Hex			
400	0190h	HWTO mode selection	Generates an alarm when the HWTO1 input or the HWTO2 input is turned OFF. **[Setting range]** 0: Alarm is not present 1: Alarm is present	0

- **Alarm of HWTO input circuit error**

If a time after either the HWTO1 input or the HWTO2 input is turned OFF until the other input is turned OFF exceeds the value set in the "HWTO delay time of checking dual system" parameter, an alarm will be generated. (HWTO input circuit error, alarm code 53h)
At this time, the PWR/ALM LED blinks twice in red repeatedly.

Related parameter

Parameter ID		Name	Description	Initial value
Dec	Hex			
401	0191h	HWTO delay time of checking dual system	If a time after either the HWTO1 input or the HWTO2 input is turned OFF until the other input is turned OFF exceeds the value set in this parameter, an alarm will be generated. **[Setting range]** 0 to 10 (disable), 11 to 100 ms	0

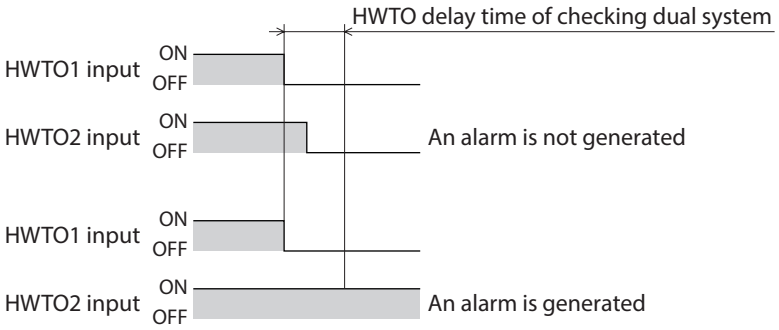

- **ETO reset ineffective period**

The motor cannot be excited even if the ETO-CLR input is turned ON until the time set in the "ETO reset ineffective period" parameter is elapsed.

Related parameter

Parameter ID		Name	Description	Initial value
Dec	Hex			
408	0198h	ETO reset ineffective period	Sets a time to disable the ETO-CLR input if the motor is excited by the ETO-CLR input after both the HWTO1 and HWTO2 inputs are turned ON. The motor cannot be excited until the time set in this parameter is exceeded even if the ETO-CLR input is turned ON. **[Setting range]** 0 to 100 ms	0

When the ETO-CLR input is turned ON before the time set in the "ETO reset ineffective period" parameter is elapsed (when the motor is excited at the ON edge of the input)

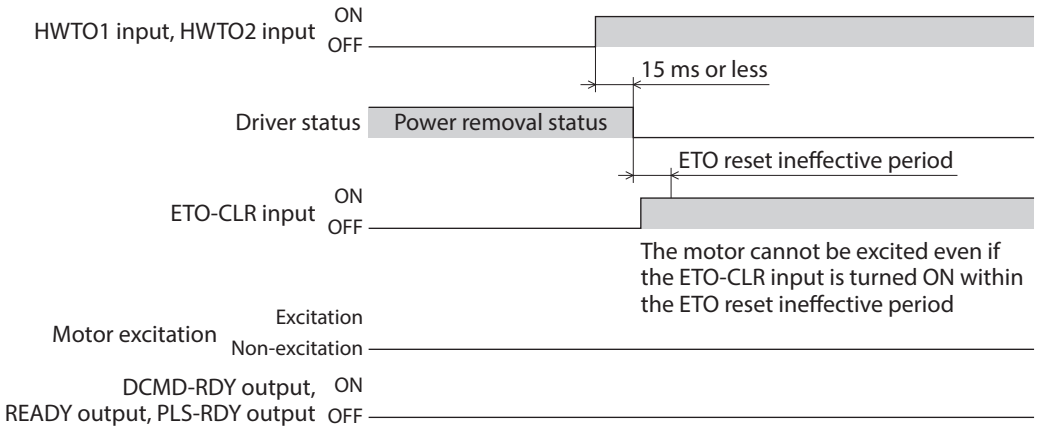

When the ETO-CLR input is turned ON after the time set in the "ETO reset ineffective period" parameter is elapsed (when the motor is excited at the ON edge of the input)

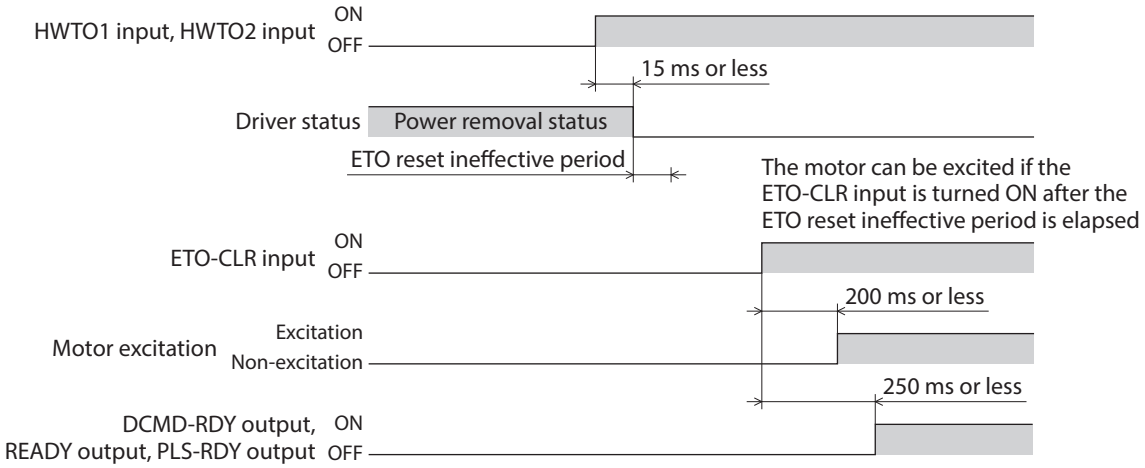

- **Signal judgment level of ETO-CLR input**

If the "ETO reset action (ETO-CLR)" parameter is set to "2: ON-level," the motor can be excited at the ON level of the ETO-CLR input instead of the ON edge. (Initial value: ON edge)

Related parameter

Parameter ID		Name	Description	Initial value
Dec	Hex			
409	0199h	ETO reset action (ETO-CLR)	Sets the judgment level of the signal when the motor is excited by the ETO-CLR input. **[Setting range]** 1: ON-Edge 2: ON-Level	1

- **Motor excitation by input signals other than ETO-CLR input**

  The function to excite the motor can be added to the ALM-RST input, the C-ON input, and the STOP input using parameters.
  In the initial value, this function is set to the STOP input only.

  Related parameters

Parameter ID		Name	Description	Initial value
Dec	Hex			
410	019Ah	ETO reset action (ALM-RST)	Excites the motor by the ALM-RST input after both the HWTO1 and HWTO2 inputs are turned ON. **[Setting range]** 0: Disable 1: Excitation at ON edge	0
411	019Bh	ETO reset action (C-ON)	Excites the motor by the C-ON input after both the HWTO1 and HWTO2 inputs are turned ON. **[Setting range]** 0: Disable 1: Excitation at ON edge	0
412	019Ch	ETO reset action (STOP)	Excites the motor by the STOP input after both the HWTO1 and HWTO2 inputs are turned ON. **[Setting range]** 0: Disable 1: Excitation at ON edge	1

7 Inspection and maintenance

7-1 Inspection

It is recommended that periodic inspections are conducted for the items listed below after each operation of the motor. If an abnormal condition is noted, discontinue any use and contact your nearest Oriental Motor sales office.

■ Inspection item

- Check if the openings in the driver are clogged.
- Check if the installation place of the driver is loose.
- Check if any of the connection parts of the driver is loose.
- Check if dust is deposited on the driver.
- Check if the driver has unusual smells or appearance defects.

Note The driver uses semiconductor components. Static electricity may damage the semiconductor components of the driver, so be extremely careful when handling them.

7-2 Warranty

Check on the Oriental Motor Website for the product warranty.

7-3 Disposal

Dispose the product correctly in accordance with laws and regulations, or instructions of local governments.

8 Cables

8-1 Connection cable (For cable type)

■ Connection cable set/Flexible connection cable set

These cables are used when connecting a motor and a driver. It is a set of two cables for the motor and the encoder. For the cable set of electromagnetic brake motors, a set of three cables for the motor, the encoder, and the electromagnetic brake is provided.

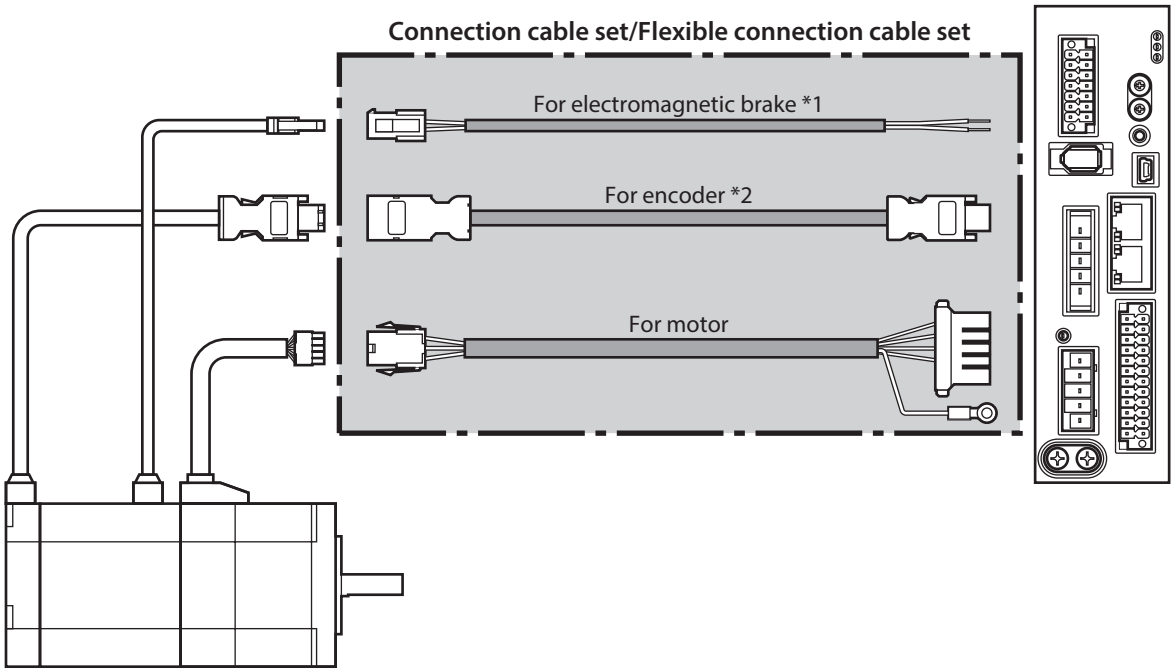

*1 Only when the motor is the electromagnetic brake type.
*2 Use the cable for encoder when the length of the encoder cable of motor is not enough.

memo When installing the motor on a moving part, use a flexible cable.

- **Connection cable set**

For motor/encoder

Model	Length [m (ft.)]
CC005VZF	0.5 (1.6)
CC010VZF	1 (3.3)
CC015VZF	1.5 (4.9)
CC020VZF	2 (6.6)
CC025VZF	2.5 (8.2)
CC030VZF	3 (9.8)
CC040VZF	4 (13.1)
CC050VZF	5 (16.4)
CC070VZF	7 (23.0)
CC100VZF	10 (32.8)
CC150VZF	15 (49.2)
CC200VZF	20 (65.6)

For motor/encoder/electromagnetic brake

Model	Length [m (ft.)]
CC005VZFB	0.5 (1.6)
CC010VZFB	1 (3.3)
CC015VZFB	1.5 (4.9)
CC020VZFB	2 (6.6)
CC025VZFB	2.5 (8.2)
CC030VZFB	3 (9.8)
CC040VZFB	4 (13.1)
CC050VZFB	5 (16.4)
CC070VZFB	7 (23.0)
CC100VZFB	10 (32.8)
CC150VZFB	15 (49.2)
CC200VZFB	20 (65.6)

- **Flexible connection cable set**

For motor/encoder

Model	Length [m (ft.)]
CC005VZR	0.5 (1.6)
CC010VZR	1 (3.3)
CC015VZR	1.5 (4.9)
CC020VZR	2 (6.6)
CC025VZR	2.5 (8.2)
CC030VZR	3 (9.8)
CC040VZR	4 (13.1)
CC050VZR	5 (16.4)
CC070VZR	7 (23.0)
CC100VZR	10 (32.8)
CC150VZR	15 (49.2)
CC200VZR	20 (65.6)

For motor/encoder/electromagnetic brake

Model	Length [m (ft.)]
CC005VZRB	0.5 (1.6)
CC010VZRB	1 (3.3)
CC015VZRB	1.5 (4.9)
CC020VZRB	2 (6.6)
CC025VZRB	2.5 (8.2)
CC030VZRB	3 (9.8)
CC040VZRB	4 (13.1)
CC050VZRB	5 (16.4)
CC070VZRB	7 (23.0)
CC100VZRB	10 (32.8)
CC150VZRB	15 (49.2)
CC200VZRB	20 (65.6)

■ Extension cable set/Flexible extension cable set

These cables are used when extending the connection cable.
Use if the length of the connection cable used is not enough when extending the distance between a motor and a driver.
It is a set of two cables for the motor and the encoder. For the cable set of electromagnetic brake motors, a set of three cables for the motor, the encoder, and the electromagnetic brake is provided.

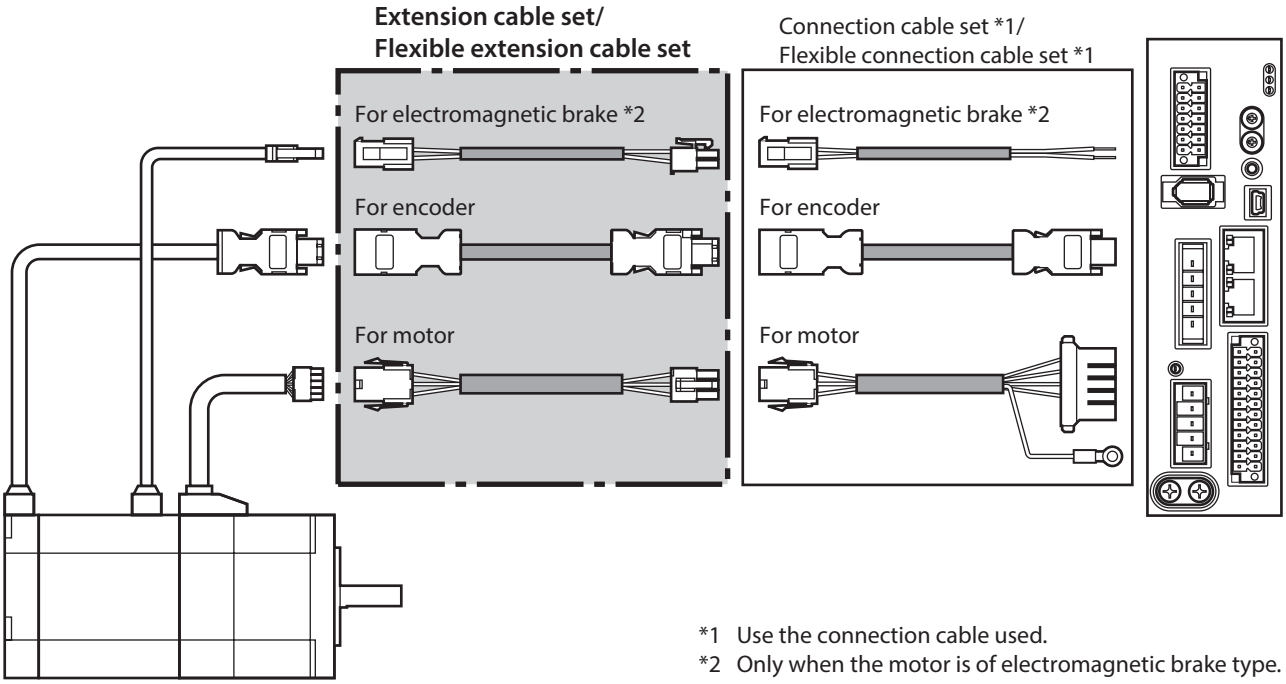

*1 Use the connection cable used.
*2 Only when the motor is of electromagnetic brake type.

memo
- When installing the motor on a moving part, use a flexible cable.
- When extending the wiring length by connecting an extension cable to the connection cable, keep the total cable length to 20 m (65.6 ft.) or less.

● **Extension cable set**

For motor/encoder

Model	Length [m (ft.)]
CC010VZFT	1 (3.3)
CC020VZFT	2 (6.6)
CC030VZFT	3 (9.8)
CC050VZFT	5 (16.4)
CC070VZFT	7 (23.0)
CC100VZFT	10 (32.8)
CC150VZFT	15 (49.2)

For motor/encoder/electromagnetic brake

Model	Length [m (ft.)]
CC010VZFBT	1 (3.3)
CC020VZFBT	2 (6.6)
CC030VZFBT	3 (9.8)
CC050VZFBT	5 (16.4)
CC070VZFBT	7 (23.0)
CC100VZFBT	10 (32.8)
CC150VZFBT	15 (49.2)

● **Flexible extension cable set**

For motor/encoder

Model	Length [m (ft.)]
CC010VZRT	1 (3.3)
CC020VZRT	2 (6.6)
CC030VZRT	3 (9.8)
CC050VZRT	5 (16.4)
CC070VZRT	7 (23.0)
CC100VZRT	10 (32.8)
CC150VZRT	15 (49.2)

For motor/encoder/electromagnetic brake

Model	Length [m (ft.)]
CC010VZRBT	1 (3.3)
CC020VZRBT	2 (6.6)
CC030VZRBT	3 (9.8)
CC050VZRBT	5 (16.4)
CC070VZRBT	7 (23.0)
CC100VZRBT	10 (32.8)
CC150VZRBT	15 (49.2)

8-2 Connection cables (For connector type)

■ Connection cable/Flexible connection cable

These cables are used when connecting a motor and a driver.

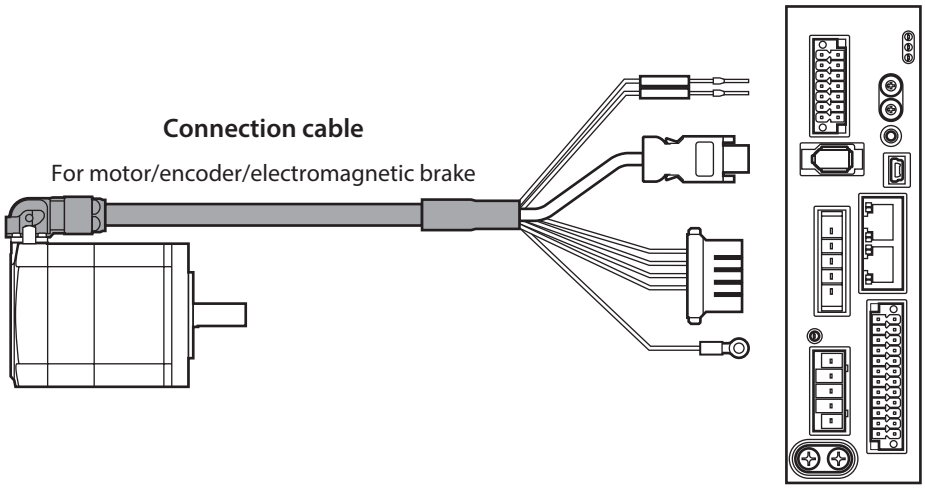

The model name of the connection cable varies depending on the outlet direction from the motor. Refer to the figures.

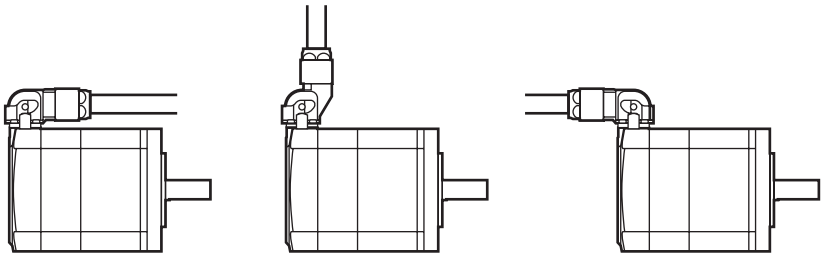

Cable outlet direction
Output shaft direction

Cable outlet direction
Vertical direction

Cable outlet direction
Opposite to output shaft direction

memo When installing the motor on a moving part, use a flexible cable.

● Connection cable

For motor/encoder

Length [m (ft.)]	Cable outlet direction		
	Output shaft direction	Vertical direction	Opposite to output shaft direction
1 (3.3)	**CCM010Z1AFF**	**CCM010Z1AVF**	**CCM010Z1ABF**
2 (6.6)	**CCM020Z1AFF**	**CCM020Z1AVF**	**CCM020Z1ABF**
3 (9.8)	**CCM030Z1AFF**	**CCM030Z1AVF**	**CCM030Z1ABF**
5 (16.4)	**CCM050Z1AFF**	**CCM050Z1AVF**	**CCM050Z1ABF**
7 (23.0)	**CCM070Z1AFF**	**CCM070Z1AVF**	**CCM070Z1ABF**
10 (32.8)	**CCM100Z1AFF**	**CCM100Z1AVF**	**CCM100Z1ABF**

For motor/encoder/electromagnetic brake

Length [m (ft.)]	Cable outlet direction		
	Output shaft direction	Vertical direction	Opposite to output shaft direction
1 (3.3)	**CCM010Z1BFF**	**CCM010Z1BVF**	**CCM010Z1BBF**
2 (6.6)	**CCM020Z1BFF**	**CCM020Z1BVF**	**CCM020Z1BBF**
3 (9.8)	**CCM030Z1BFF**	**CCM030Z1BVF**	**CCM030Z1BBF**
5 (16.4)	**CCM050Z1BFF**	**CCM050Z1BVF**	**CCM050Z1BBF**
7 (23.0)	**CCM070Z1BFF**	**CCM070Z1BVF**	**CCM070Z1BBF**
10 (32.8)	**CCM100Z1BFF**	**CCM100Z1BVF**	**CCM100Z1BBF**

- **Flexible connection cable**

For motor/encoder

Length [m (ft.)]	Cable outlet direction		
	Output shaft direction	Vertical direction	Opposite to output shaft direction
1 (3.3)	**CCM010Z1AFR**	**CCM010Z1AVR**	**CCM010Z1ABR**
2 (6.6)	**CCM020Z1AFR**	**CCM020Z1AVR**	**CCM020Z1ABR**
3 (9.8)	**CCM030Z1AFR**	**CCM030Z1AVR**	**CCM030Z1ABR**
5 (16.4)	**CCM050Z1AFR**	**CCM050Z1AVR**	**CCM050Z1ABR**
7 (23.0)	**CCM070Z1AFR**	**CCM070Z1AVR**	**CCM070Z1ABR**
10 (32.8)	**CCM100Z1AFR**	**CCM100Z1AVR**	**CCM100Z1ABR**

For motor/encoder/electromagnetic brake

Length [m (ft.)]	Cable outlet direction		
	Output shaft direction	Vertical direction	Opposite to output shaft direction
1 (3.3)	**CCM010Z1BFR**	**CCM010Z1BVR**	**CCM010Z1BBR**
2 (6.6)	**CCM020Z1BFR**	**CCM020Z1BVR**	**CCM020Z1BBR**
3 (9.8)	**CCM030Z1BFR**	**CCM030Z1BVR**	**CCM030Z1BBR**
5 (16.4)	**CCM050Z1BFR**	**CCM050Z1BVR**	**CCM050Z1BBR**
7 (23.0)	**CCM070Z1BFR**	**CCM070Z1BVR**	**CCM070Z1BBR**
10 (32.8)	**CCM100Z1BFR**	**CCM100Z1BVR**	**CCM100Z1BBR**

8-3 I/O signal cable

This is a shielded cable for good noise immunity to connect the I/O signals of the host controller to the driver. The ground wire useful to grounding is extracted from both ends of the cable. A connector is assembled at the driver side.

Model	Cable length [m (ft.)]	Number of lead wire cores
CC24D005C-1	0.5 (1.6)	24 pcs.
CC24D010C-1	1 (3.3)	
CC24D020C-1	2 (6.6)	

9 Accessories

9-1 Pulse signal converter for noise immunity

This product converts a pulse signal, which is output from the open collector output, to a pulse signal for good noise immunity by outputting the pulse signal again from the differential output.

Model: **VCS06**

9-2 Relay contact protection circuit/module

- **CR circuit for surge suppression**

  This product is effective to suppress the surge which occurs in a relay contact part. Use it to protect the contacts of the relay or switch.

  Model: **EPCR1201-2**

- **CR circuit module**

  This product is effective to suppress the surge which occurs in a relay contact part. Use it to protect the contacts of the relay or switch.
  Four pieces of CR circuit for surge suppression are mounted on the compact circuit, and this product can be installed to the DIN rail. This product can make the wiring easily and securely since it also supports terminal block connection.

  Model: **VCS02**

9-3 Regeneration resistor

If vertical drive (gravitational operation) such as elevating applications is performed or if sudden start-stop operation of a large inertia is repeated frequently, connect the regeneration resistor.
Be sure to connect if an alarm or information of "overvoltage" was generated.

Model: **RGB100**

3 DC power input type

This part explains contents specific to the DC power input type driver.

◆Table of contents

1 System configuration 60

2 Preparation 61

2-1 Checking the product 61
2-2 How to identify the product model 61
2-3 Products possible to combine 61
2-4 Information about nameplate 62
2-5 Names and functions of parts 62
2-6 Indication of LEDs 64

3 Installation 66

3-1 Installation location 66
3-2 Installation method 66

4 Connection 68

4-1 Connection example 68
4-2 Connecting the control power supply 69
4-3 Connecting the main power supply and grounding 70
4-4 Connecting the EtherNet/IP communication cable 72
4-5 Connecting the USB cable 72
4-6 Connecting the I/O signals 73
4-7 Noise elimination measures 78
4-8 Conformity to the EMC Directive/ Regulations 79

5 Setting of IP address 81

5-1 When using the IP address setting switches 81
5-2 When setting with parameters 82
5-3 When setting with DHCP server 83

6 Power removal function 84

6-1 Safety parameters 84
6-2 Notes when using the power removal function 85
6-3 I/O signals 85
6-4 Operation of power removal function 86
6-5 Example of use 89
6-6 Verification testing of power removal function 90
6-7 Related functions 90

7 Inspection and maintenance 94

7-1 Inspection 94
7-2 Warranty 94
7-3 Disposal 94

8 Cables 95

8-1 Connection cable (For cable type) 95
8-2 Connection cables (For connector type) 99
8-3 I/O signal cable 101

9 Accessories 102

9-1 Pulse signal converter for noise immunity 102
9-2 Relay contact protection circuit/ module 102

1 System configuration

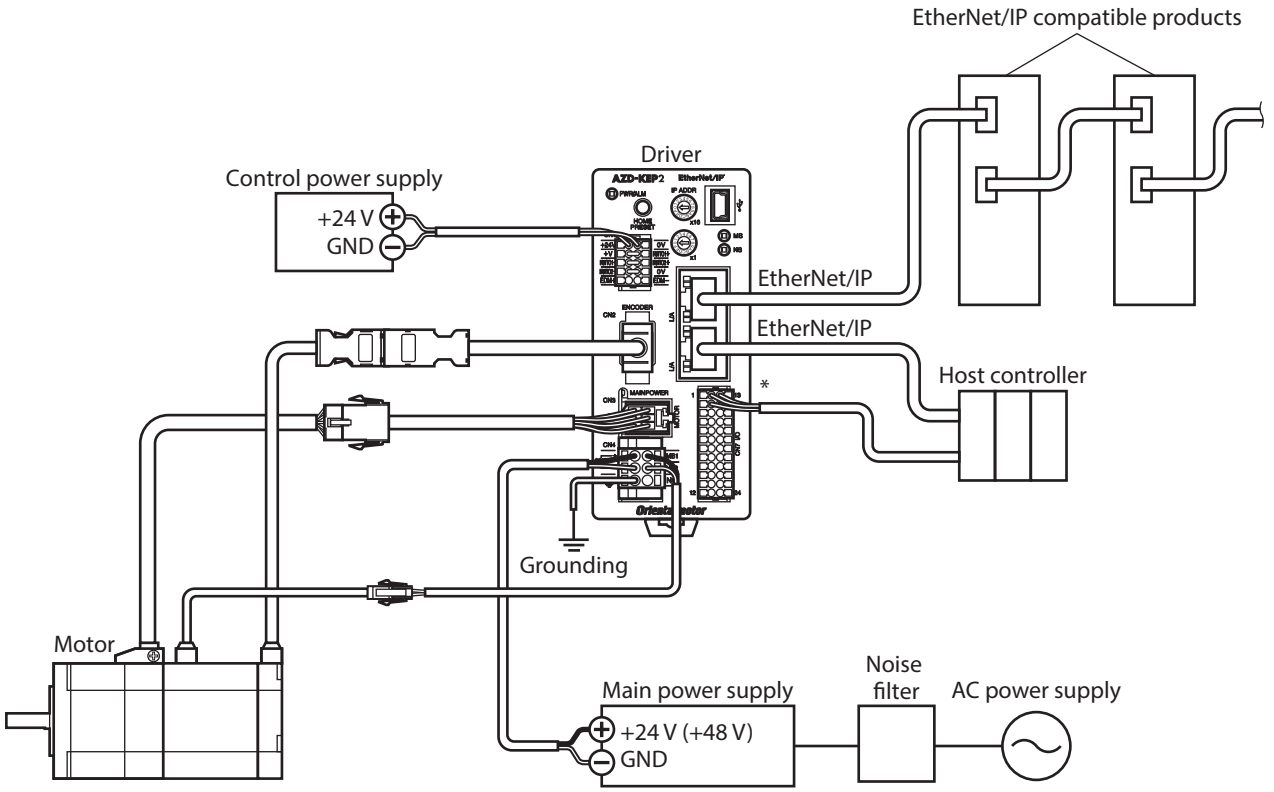

* Connect when using direct I/O or sensors.

2 Preparation

This chapter explains the items you should check, as well as names and functions of each part.

2-1 Checking the product

Verify that the items listed below are included. Report any missing or damaged items to the Oriental Motor sales office from which you purchased the product.

- Driver ..... 1 unit
- CN1 connector (10 pins) ..... 1 pc.
- CN4 connector (6 pins) ..... 1 pc.
- CN7 connector (24 pins) ..... 1 pc.
- Instructions and Precautions for Safe Use ..... 1 copy

Included connector model

Type	Part number	Manufacturer
CN1 connector	DFMC0,5/5-ST-2,54	PHOENIX CONTACT GmbH & Co. KG
CN4 connector	DFMC1,5/3-ST-3,5-LR	PHOENIX CONTACT GmbH & Co. KG
CN7 connector	DFMC0,5/12-ST-2,54	PHOENIX CONTACT GmbH & Co. KG

2-2 How to identify the product model

Check the model name of the driver against the number shown on the nameplate. Refer to p.62 for how to identify the nameplate.

AZD - K EP 2
1 2 3 4

1	Series	**AZD**: **AZ** Series driver
2	Power supply input	**K**: 24/48 VDC
3	Network type	**EP**: EtherNet/IP
4	Reference number	

2-3 Products possible to combine

Products with which the driver can be combined are listed below. Check the model name of the product with the nameplate.

Power supply type	Product type	Applicable series	Model name representing series name *1	Example of model name
DC power input	Stepping motor	**AZ** Series	**AZM**	**AZM46AK** **AZM66AK-TS10**
	Motorized actuator	**EAS** Series *2	**EASM**	**EASM4NXD005AZAK**
		EAC Series *2	**EACM**	**EACM2E05AZAK**
		EZS Series *2	**EZSM**	**EZSM6D005AZAK**
		DR Series	**DR**	**DR28G2.5B03-AZAKU** **DR28T1B03-AZAKD-F**
		DRS2 Series	**DRSM**	**DRSM60-05A4AZAK**
		DGII Series	**DGM** **DGB** **DGR**	**DGM85R-AZAK** **DGB85R12-AZAKR** **DGR85R36-AZAKHR**
		EH Series	**EH**	**EH4-AZAKH**
		L Series	**LM**	**LM4F150AZAK-1**

*1 The driver described in this manual can be combined with products that begin with these model names.
*2 For these motorized actuators, the equipped motors have been evaluated to affix the CE Marking. Check the model name of the equipped motor with the nameplate.

2-4 Information about nameplate

The figure shows an example.

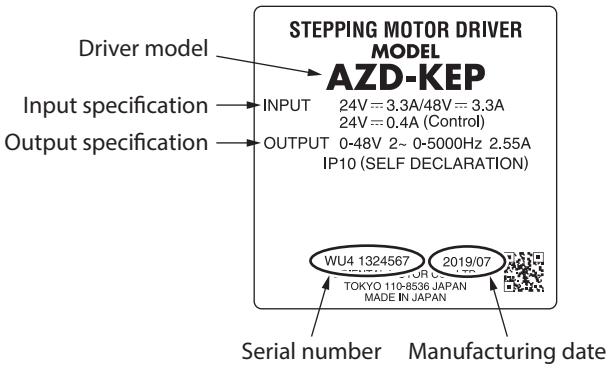

memo The position describing the information may vary depending on the product.

2-5 Names and functions of parts

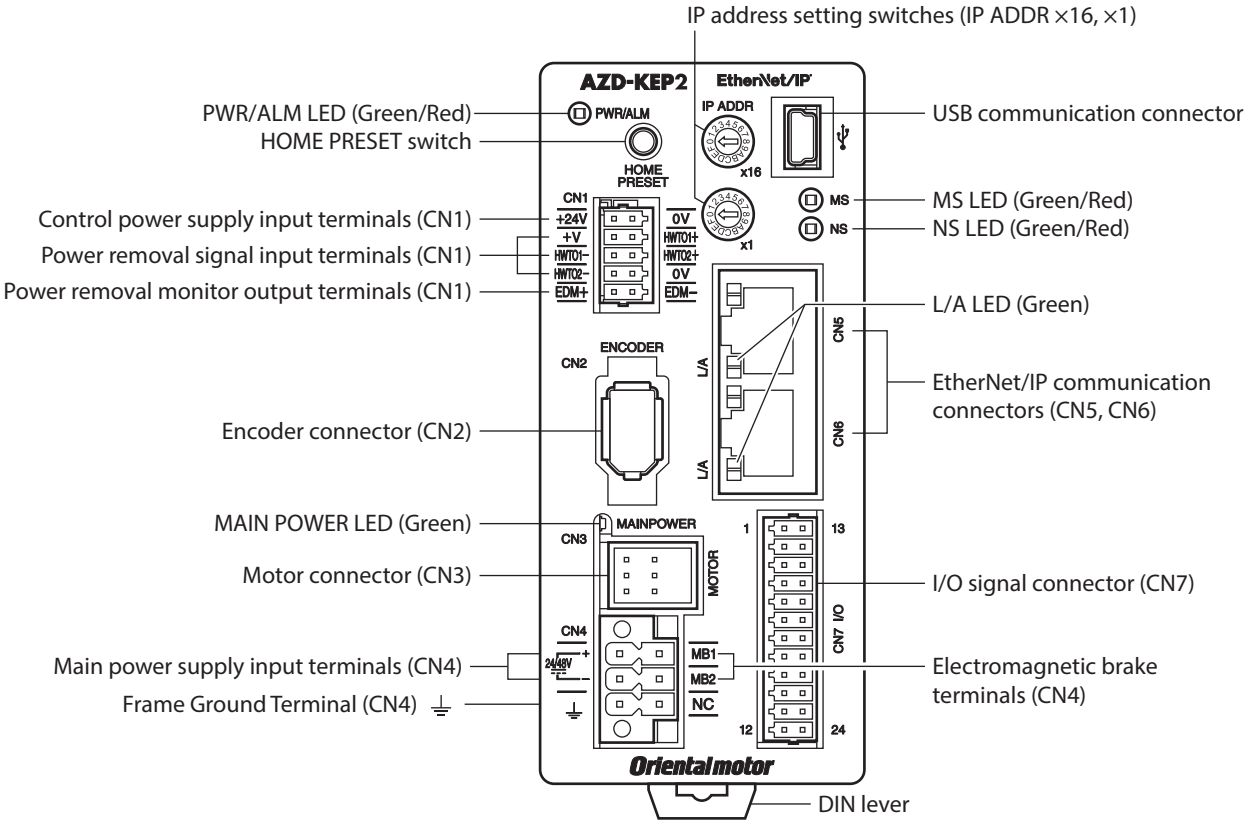

Type	Name	Sign	Description
LED	PWR/ALM LED (Green/Red)	PWR/ALM	• This LED is lit in green while the control power supply is turned on. • If an alarm (protective function) is generated, the LED will blink in red. • If the power removal function (p.84) is triggered, the LED will blink in green. • If information is generated, the LED will simultaneously blink in red and green twice. (Green and red colors may overlap and it may be visible to orange.)
	MAIN POWER LED (Green)	MAIN POWER	This LED is lit while the main power supply is turned on.
	MS LED (Green/Red)	MS	This LED indicates the status of the driver.
	NS LED (Green/Red)	NS	This LED indicates the communication status of EtherNet/IP.
	L/A LED (Green)	L/A	This LED indicates the LINK/ACT status of EtherNet/IP.
Switch	IP address setting switches	IP ADDR ×16 IP ADDR ×1	These switches are used to set an IP address. Factory setting: 00 (×16: 0, ×1: 0)
	HOME PRESET switch	HOME PRESET	This switch is used to set the starting position (home) when positioning operation is performed.
Connector	Encoder connector (CN2)	ENCODER	Connects the encoder.
	Motor connector (CN3)	MOTOR	Connects the motor.
	USB communication connector		Connects a PC in which the **MEXE02** has been installed. (USB2.0 mini-B port)
	EtherNet/IP communication connectors (CN5, CN6)	–	Connects the EtherNet/IP communication cable.
	I/O signal connector (CN7)	I/O	Connects when using direct I/O or sensors.
Terminal	Control power supply input terminals (CN1)	+24V, 0V	Connects the control power supply.
	Power removal signal input terminals (CN1)	HWTO1+, HWTO1– HWTO2+, HWTO2–	Connects the external device.
	Power removal monitor output terminals (CN1)	EDM+, EDM–	
	Main power supply input terminals (CN4)	+, –	Connects the main power supply.
	Electromagnetic brake terminals (CN4)	MB1, MB2	Connects the lead wires from the electromagnetic brake.
	Frame Ground Terminal (CN4)		Ground using a grounding wire of AWG24 to 16 (0.2 to 1.25 mm^2).
Other	DIN lever	–	This is used to install the driver to a DIN rail.

2-6 Indication of LEDs

■ PWR/ALM LED

This LED indicates the status of the driver.

LED status		Description
Green	Red	
Unlit	Unlit	The control power supply is not turned on.
Lit	Unlit	The control power supply is turned on.
Unlit	Blinking	An alarm is being generated. Details about the generated alarm can be checked by counting the number of times the LED blinks. The LED is lit in green when the alarm is reset.
Blinking	Unlit	The power removal function has been activated. After the power removal function is released, the LED is lit in green when the ETO-CLR input is turned ON.
Blinking twice at the same time *		• Information is being generated. The LED is lit in green when the information is cleared. • Teaching, remote operation is being executed with the **MEXE02**. The LED is lit in green when teaching, remote operation is complete.
Blinking at the same time *		The interlock was released by holding down the HOME PRESET switch. The LED is lit in green when the time set in the "Extended input (EXT-IN) interlock releasing duration" parameter is elapsed.
Lit at the same time *		The input signal assigned to the HOME PRESET switch is being executed. The LED is lit in green when it is complete.
Repeating "Green → Red → Simultaneously lit → Unlit"		This is the driver simulation mode.

* Green and red colors may overlap and it may be visible to orange.

■ MS LED

This LED indicates the status of the driver.

LED status		Description
Green	Red	
Unlit	Unlit	The control power supply of the driver is not turned on.
Blinking	Unlit	The communication setting of EtherNet/IP is invalid.
Lit	Unlit	The driver operates properly.
Unlit	Blinking	• An alarm that can be reset with EtherNet/IP or the **MEXE02** was generated. • The setting of an IP address is duplicated in the same system.
Unlit	Lit	An alarm that cannot be reset with EtherNet/IP or the **MEXE02** was generated.
Blinking alternately		Self-diagnosis when turning on the power is executing.

The timing to blink the LED is as follows.

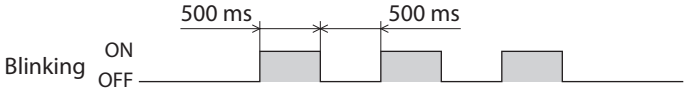

■ NS LED

This LED indicates the communication status of EtherNet/IP.

LED status		Description
Green	Red	
Unlit	Unlit	• In an offline state. • The control power supply of the driver is not turned on.
Blinking	Unlit	In an online state. Connection with the scanner is not established.
Lit	Unlit	In an online state. Connection with the scanner is being established.
Unlit	Blinking	Connection with the scanner became time-out.
Unlit	Lit	The setting of an IP address is duplicated in the same system.
Blinking alternately		Self-diagnosis when turning on the power is executing.

The timing to blink the LED is as follows.

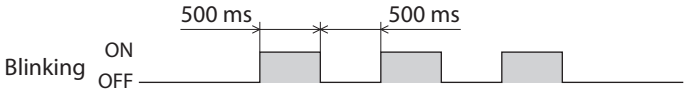

■ L/A LED

This LED indicates the LINK/ACT status of EtherNet/IP.

LED status	Description
Unlit	• In an offline state. • The frame of EtherNet/IP is not sent and received.
Blinking	• In an online state. • The frame of EtherNet/IP is sent and received.
Lit	• In an online state. • The frame of EtherNet/IP is not sent and received.

3 Installation

This chapter explains the installation location and installation method of the driver.

3-1 Installation location

The driver is designed and manufactured to be incorporated in equipment. Install it in a well-ventilated location that provides easy access for inspection. The location must also satisfy the following conditions:

- Inside an enclosure that is installed indoors (provide vent holes)
- Operating ambient temperature: 0 to +50 °C (+32 to +122 °F) (non-freezing)
- Operating ambient humidity: 85 % or less (non-condensing)
- Area free of explosive atmosphere, toxic gas (such as sulfuric gas), or liquid
- Area not exposed to direct sun
- Area free of excessive amount of dust, iron particles or the like
- Area not subject to splashing water (rain, water droplets), oil (oil droplets) or other liquids
- Area free of excessive salt
- Area not subject to continuous vibrations or excessive shocks
- Area free of excessive electromagnetic noise (from welders, power machinery, etc.)
- Area free of radioactive materials, magnetic fields or vacuum
- Up to 1,000 m (3,300 ft.) above sea level

3-2 Installation method

Mount the driver to a 35 mm (1.38 in.) width DIN rail.
When installing two or more drivers in parallel, it is possible to install them closely in the horizontal direction.
Provide a minimum clearance of 50 mm (1.97 in.) in the vertical direction.
When installing three or more drivers closely, the heat generation of the inside drivers become high. Install the less frequently used drivers toward the inside. Also, use the drivers in conditions that an ambient temperature is 0 to +40 °C (+32 to +104 °F) and the stop current is 50 % or less.

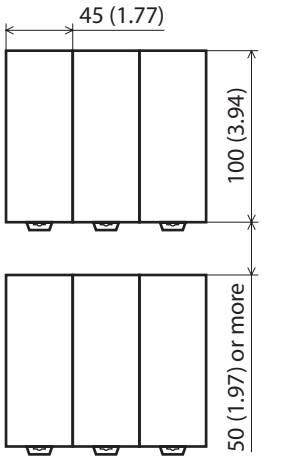

Unit: mm (in.)

Note

- Do not install any equipment that generates a large amount of heat or noise near the driver.
- Do not install the driver underneath the scanner or other equipment vulnerable to heat.
- If the ambient temperature of the driver exceeds 50 °C (122 °F), reconsider the ventilation condition such as providing forced cooling by using fans or creating spaces between the drivers.
- Be sure to install the driver vertically (in vertical position).

■ Installing to DIN rail

1. Pull down the DIN lever of the driver and lock it. Hang the hook at the rear to the DIN rail.
2. Hold the driver to the DIN rail, and push up the DIN lever to secure.
3. Secure both sides using end plates.

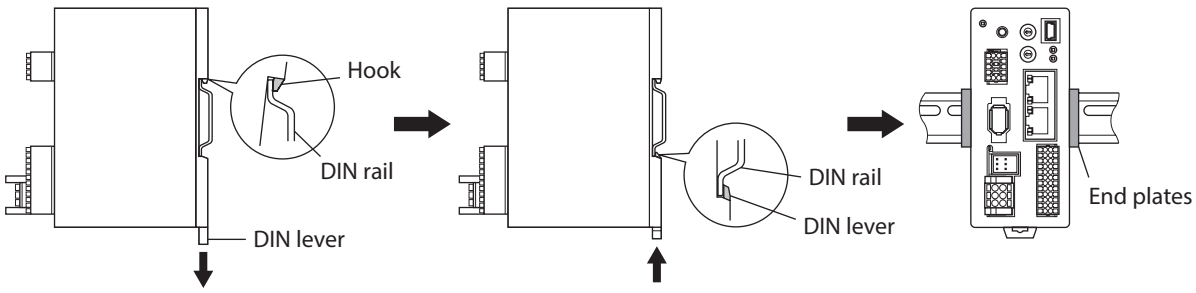

Removing from DIN rail

Pull the DIN lever down until it locks using a slotted screwdriver, and lift the bottom of the driver to remove it from the rail. Use force of about 10 to 20 N (2.2 to 4.5 lb.) to pull the DIN lever to lock it. Excessive force may damage the DIN lever.

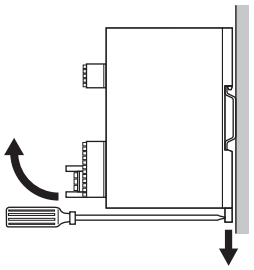

■ Dimensions

- Unit: mm (in.)
- Mass: 0.18 kg (0.4 lb.)

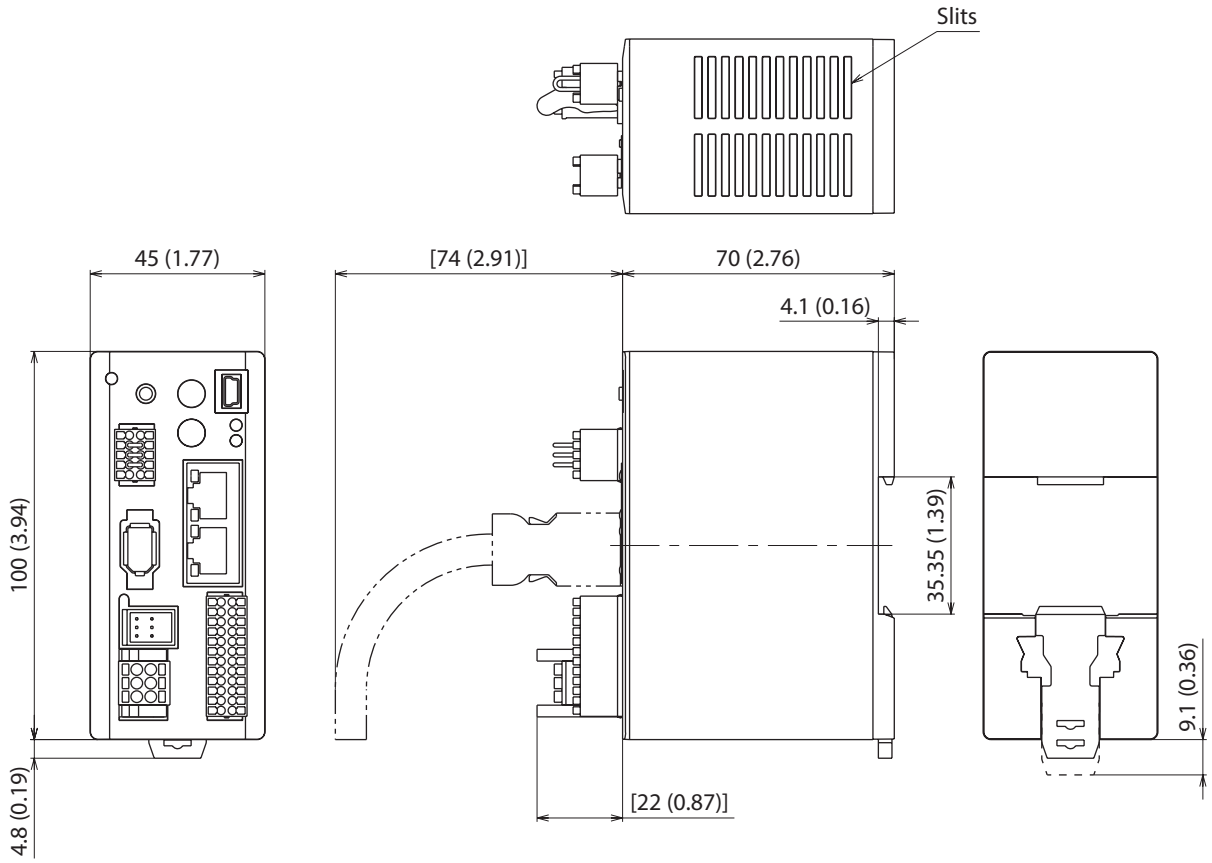

4 Connection

This chapter explains a connection example of a driver and a motor, connection methods of power supplies, the grounding method, and others.
The installation and wiring methods in compliance with the EMC Directive/Regulations as well as protection against noise are also explained.

4-1 Connection example

Use connection cables of Oriental Motor to connect the motor. Check the cable models on p.95.
The figure shows an example when the cable type electromagnetic brake motor is used.

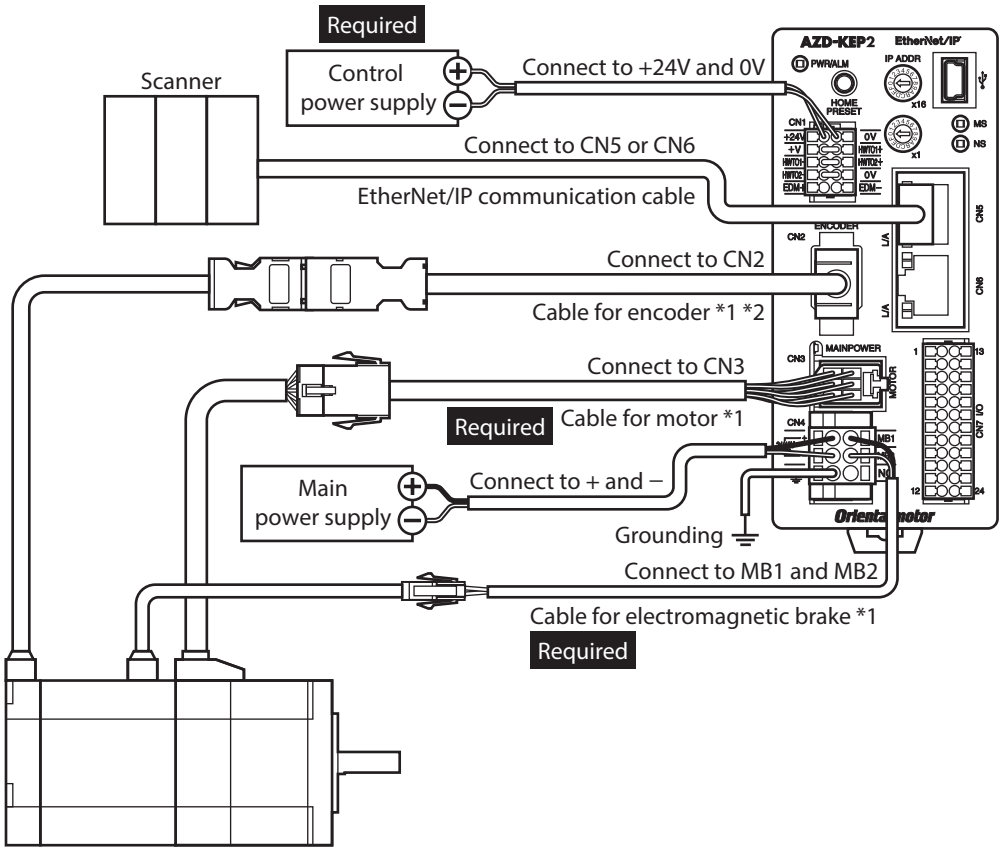

*1 These cables are provided as our products. Purchase it separately.
*2 Use the cable for encoder when the length of the encoder cable of motor is not enough.

Note

- Connect the connectors securely. Insecure connections may cause malfunction or damage to the motor or driver.
- The lead wires of the "cable for electromagnetic brake" have polarities, so connect them in the correct polarities. If the lead wires are connected with their polarities reversed, the electromagnetic brake will not operate properly.
- Do not wire the power supply cable of the driver in the same cable duct with other power lines or motor cable. Doing so may cause malfunction due to noise.
- Keep the wiring distance between the motor and the driver equal to or less than the following values. Exceeding the following wiring distance may cause the driver to generate heat or increase the electrical noise emitted from the product.
  Cable type: 20 m (65.6 ft.)
  Connector type: 10 m (32.8 ft.)

memo
- Before connecting or disconnecting a connector, turn off the main power supply and control power supply, and check the PWR/ALM LED and the MAIN POWER LED have been turned off.
- When pulling off the motor cable, do so while pressing the latches on the connector with fingers.
- When installing the motor on a moving part, use a flexible cable. Refer to p.95 for the model name.

■ Electrical wire size

Connector	Terminal symbol	Recommended wire size
CN1	+24V, 0V, HWTO1+, HWTO1–, HWTO2+, HWTO2–, EDM+, EDM–	Stranded wire or solid wire AWG26 to 20 (0.14 to 0.5 mm^2)
CN4	+, –, MB1, MB2, ⏚	Stranded wire or solid wire AWG24 to 16 (0.2 to 1.25 mm^2)
CN7	–	Stranded wire or solid wire AWG26 to 20 (0.14 to 0.5 mm^2)

4-2 Connecting the control power supply

■ Pin assignment

There are two terminals for 0 V: One for control power supply and the other is for internal connection. Check each position in the figure and table shown.

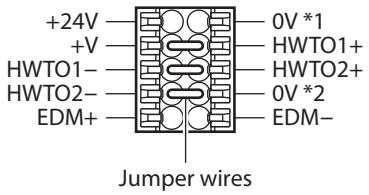

Sign	Description
+24V, 0V *1	Connects the control power supply.
HWTO1+, HWTO1– HWTO2+, HWTO2–	Connects the external device. When using the power removal function, remove the jumper wires and connect the external device. If the power removal function is not used, connect jumper wires between the terminals to short-circuit as shown in the figure.
EDM+, EDM–	Connects the external device. If the power removal function is not used, do not connect anything.
+V, 0V *2	These are for internal connection. Do not connect anything. If the power removal function is not used, connect a jumper wire between the terminals to short-circuit as shown in the figure.

■ Wiring method of CN1 connector

- Applicable lead wire: AWG26 to 20 (0.14 to 0.5 mm^2)
- Stripping length of wire insulation: 7 mm (0.28 in.)

1. Strip the insulation of the lead wire.
2. Insert the lead wire while pushing the button of the orange color with a slotted screwdriver.
3. After having inserted, release the button to secure the lead wire.

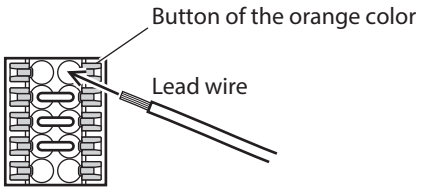

■ Power supply current capacity

Input power supply voltage	Power supply current capacity	
	Without electromagnetic brake	With electromagnetic brake
24 VDC±5 % *1	0.15 A	0.4 A *2

*1 When an electromagnetic brake motor is used, if the wiring distance between the cable type motor and the driver is extended to 20 m (65.6 ft.) using our cable, the input voltage is 24 VDC±4 %.
*2 The **AZM46** type is 0.23 A.

4-3 Connecting the main power supply and grounding

■ Pin assignment

Sign	Description
+	Main power supply input (24 VDC/48 VDC)
–	Main power supply GND
⏚	Frame Ground
MB1	Electromagnetic brake – (black)
MB2	Electromagnetic brake + (white)
NC	Not connected

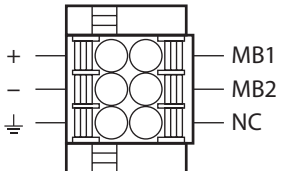

■ Wiring method of CN4 connector

- Applicable lead wire: AWG24 to 16 (0.2 to 1.25 mm^2)
- Stripping length of wire insulation: 10 mm (0.39 in.)

1. Strip the insulation of the lead wire.
2. Insert the lead wire while pushing the button of the orange color with a slotted screwdriver.
3. After having inserted, release the button to secure the lead wire.

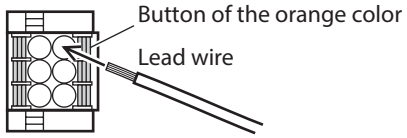

■ Power supply current capacity

The current capacity of the power supply varies depending on the product combined.
Check the current capacity in reference to the equipped motor model when using the **EAC** Series, **EAS** Series, or **EZS** Series.
The box (□) in the model indicates an alphabet (**B**, **M**, or **R**) representing the shape of the actuator.

Series	Model	Input power supply voltage	Power supply current capacity
AZ Series **EAC** Series **EAS** Series **EZS** Series	**AZM14**	24 VDC±5 %	0.4 A or more
	AZM15		0.5 A or more
	AZM24		1.6 A or more
	AZM26		1.5 A or more
	AZM46	24 VDC±5 % 48 VDC±5 %	1.5 A or more
	AZM48		2.1 A or more
	AZM66		3.3 A or more
	AZM69		3.1 A or more
DGII Series	**DG□60**	24 VDC±5 %	1.6 A or more
	DG□85	24 VDC±5 % 48 VDC±5 %	1.5 A or more
	DG□130		3.3 A or more
DR Series	**DR20**	24 VDC±5 %	0.4 A or more
	DR28		1.3 A or more
DRS2 Series	**DRSM42**	24 VDC±5 % 48 VDC±5 %	1.5 A or more
	DRSM60		2.2 A or more
EH Series	**EH3**	24 VDC±5 %	0.4 A or more
	EH4		1.6 A or more
L Series	**LM2** **LM4**	24 VDC±5 % 48 VDC±5 %	3.3 A or more

■ Grounding the driver

Ground the Frame Ground Terminal (CN4) as necessary.
Do not share the grounding wire with a welder or any other power equipment.

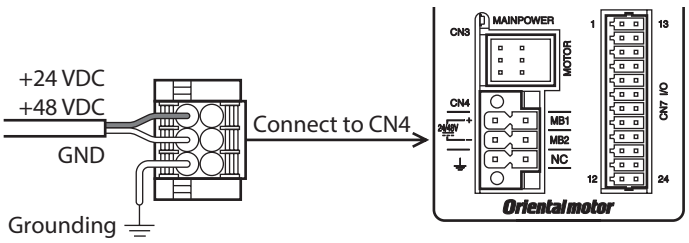

4-4 Connecting the EtherNet/IP communication cable

Connect the EtherNet/IP communication cable to the EtherNet/IP communication connector (CN5, CN6).

■ Pin assignment

Signal name	Description
TXP	Transmitted data +
TXN	Transmitted data –
RXP	Received data +
N.C.	–
N.C.	–
RXN	Received data –
N.C.	–
N.C.	–

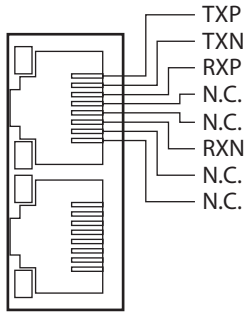

4-5 Connecting the USB cable

Using a USB cable of the following specification, connect a PC in which the **MEXE02** has been installed to the USB communication connector.

Specification	USB2.0 (full speed)
Cable	Length: 3 m (9.8 ft.) or less Shape: A to mini B

memo

- Connect the driver and PC directly using the USB cable.
- In large electrically noisy environments, use the USB cable with a ferrite core or install a ferrite core to the USB cable.

4-6 Connecting the I/O signals

Connect when using direct I/O or sensors.

■ Pin assignment

Pin No.	Signal name *	Description *
1	CW+ [PLS+]	CW pulse input + [Pulse input +]
2	CCW+ [DIR+]	CCW pulse input + [Rotation direction switching input +]
3	IN0	Control input 0 (ZHOME)
4	IN2	Control input 2 (STOP)
5	IN-COM 0-3	IN0 to IN3 inputs common
6	IN4	Control input 4 (FW-JOG)
7	OUT0	Control output 0 (HOME-END)
8	OUT2	Control output 2 (PLS-RDY)
9	OUT4	Control output 4 (MOVE)
10	OUT-COM	Output common
11	ASG+	Phase A pulse output +
12	BSG+	Phase B pulse output +

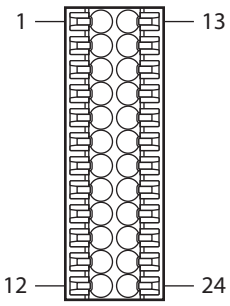

Pin No.	Signal name *	Description *
13	CW– [PLS–]	CW pulse input – [Pulse input –]
14	CCW– [DIR–]	CCW pulse input – [Rotation direction switching input –]
15	IN1	Control input 1 (FREE)
16	IN3	Control input 3 (ALM-RST)
17	IN-COM 4-5	IN4, IN5 inputs common
18	IN5	Control input 5 (RV-JOG)
19	OUT1	Control output 1 (IN-POS)
20	OUT3	Control output 3 (READY)
21	OUT5	Control output 5 (ALM-B)
22	GND	GND
23	ASG–	Phase A pulse output –
24	BSG–	Phase B pulse output –

* Values in brackets [ ] are signals when the 1-pulse input mode is set.
  Values in parentheses ( ) are initial values.

■ Wiring method of CN7 connector

- Applicable lead wire: AWG26 to 20 (0.14 to 0.5 mm^2)
- Stripping length of wire insulation: 7 mm (0.28 in.)

1. Strip the insulation of the lead wire.
2. Insert the lead wire while pushing the button of the orange color with a slotted screwdriver.
3. After having inserted, release the button to secure the lead wire.

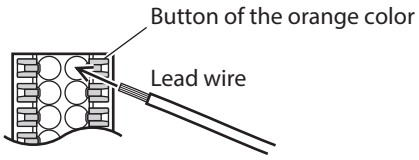

memo Be certain the I/O signal cable is as short as possible. The maximum input frequency will decrease as the cable length increases.

■ Connection example with a current sink output circuit

● When the pulse input circuit of the driver is of line driver type

The pin No.1, No.2, No.13, and No.14 are only available to the pulse input. Other functions cannot be assigned.

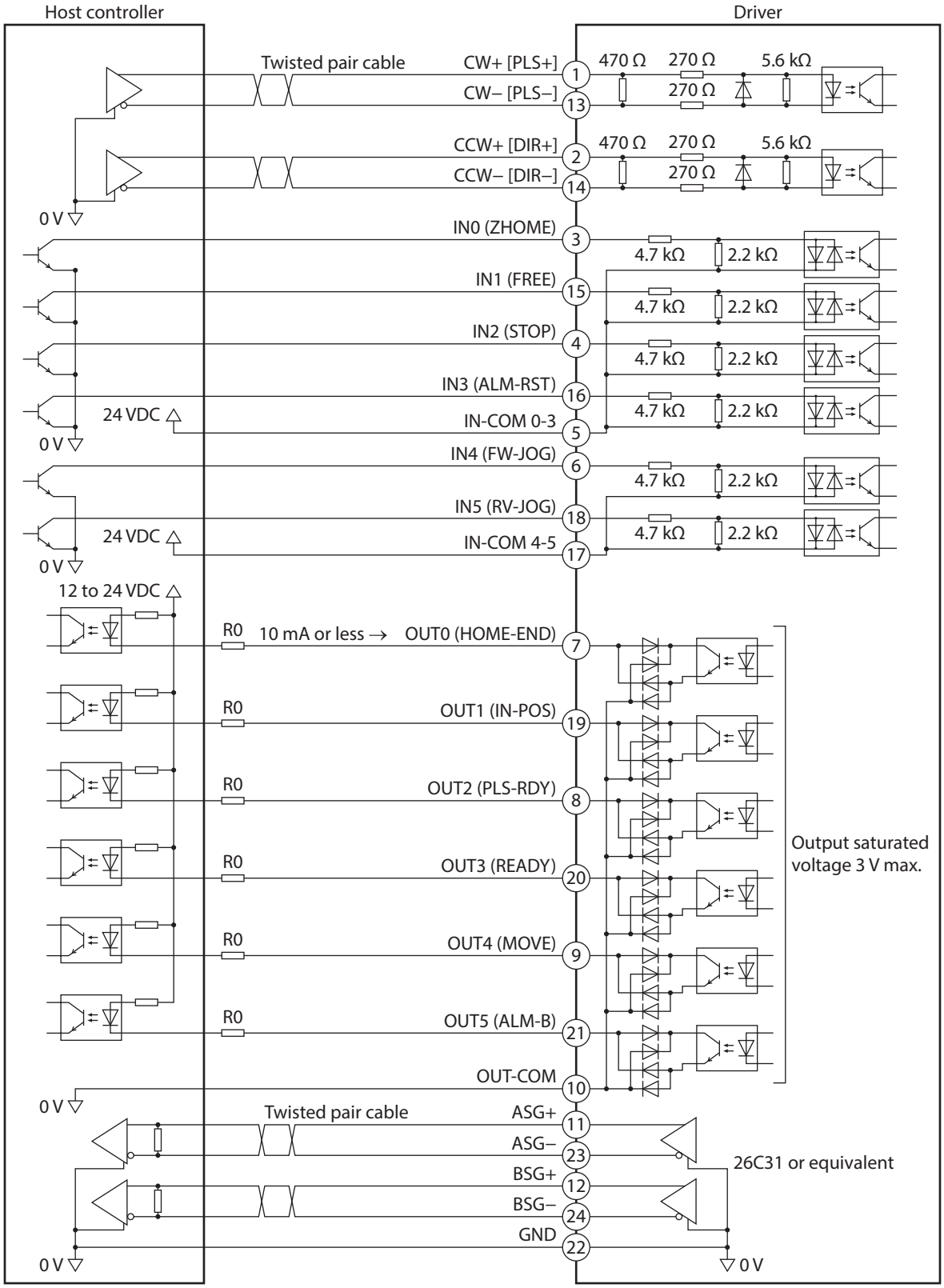

* Values in brackets [ ] are signals when the 1-pulse input mode is set.
Values in parentheses ( ) are initial values.

memo
- Use input signals at 24 VDC.
- Use output signals at 12 to 24 VDC, 10 mA or less. If the current exceeds 10 mA, connect an external resistor R0 so that the current becomes 10 mA or less.
- The saturated voltage of the output signal is 3 V maximum.

● **When the pulse input circuit of the driver is of open collector type**

The pin No.1, No.2, No.13, and No.14 are only available to the pulse input. Other functions cannot be assigned.

memo Use the CW [PLS] input and CCW [DIR] input at 5 to 24 VDC. When using signals at 24 VDC, connect an external resistor R1 (1.2 kΩ to 2.2 kΩ, 0.5 W or more). When using signals at 5 VDC, apply the voltage directly.

When the voltage of pulse input signals is 5 VDC

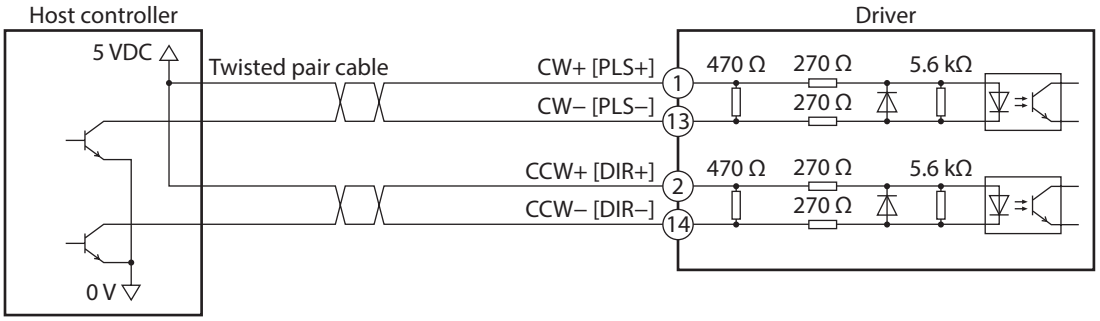

* Values in brackets [ ] are signals when the 1-pulse input mode is set.

When the voltage of pulse input signals is 24 VDC

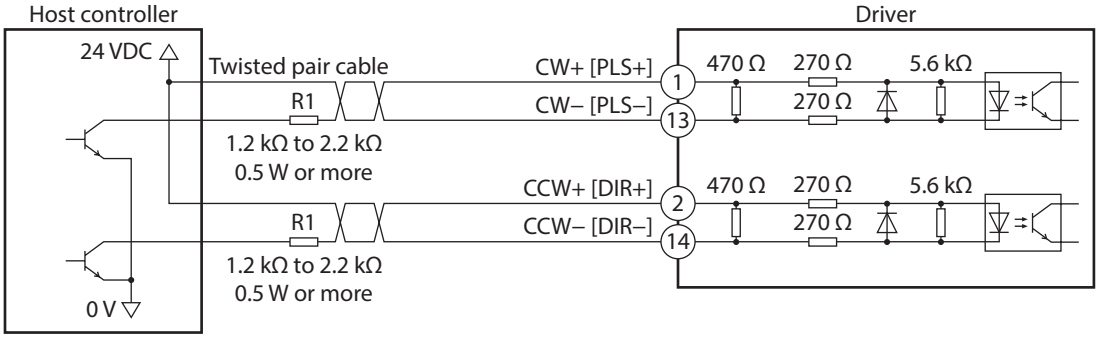

* Values in brackets [ ] are signals when the 1-pulse input mode is set.

■ Connection example with a current source output circuit

● **When the pulse input circuit of the driver is of line driver type**

The pin No.1, No.2, No.13, and No.14 are only available to the pulse input. Other functions cannot be assigned.

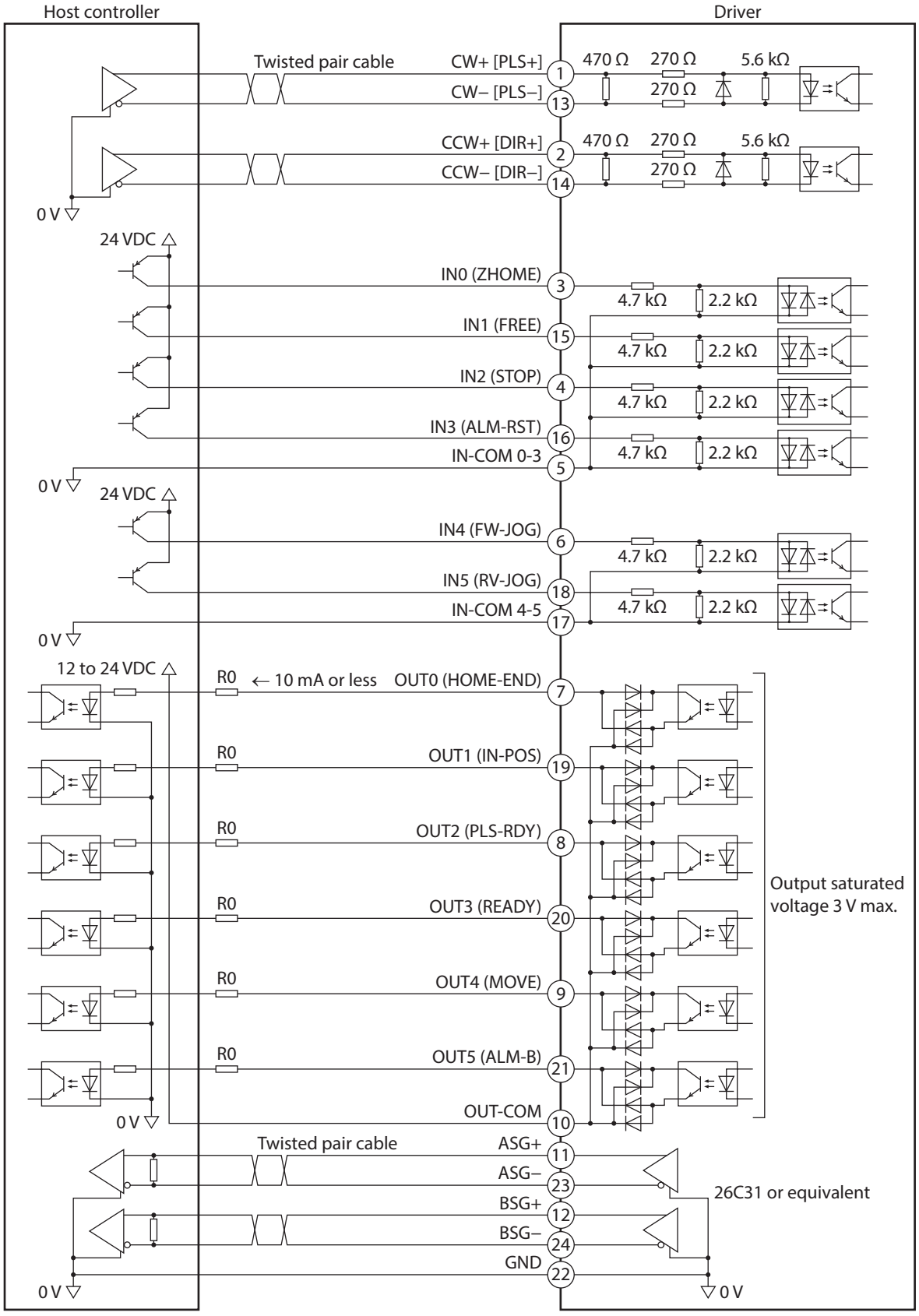

* Values in brackets [ ] are signals when the 1-pulse input mode is set.
Values in parentheses ( ) are initial values.

memo
- Use input signals at 24 VDC.
- Use output signals at 12 to 24 VDC, 10 mA or less. If the current exceeds 10 mA, connect an external resistor R0 so that the current becomes 10 mA or less.
- The saturated voltage of the output signal is 3 V maximum.

● **When the pulse input circuit of the driver is of open collector type**

The pin No.1, No.2, No.13, and No.14 are only available to the pulse input. Other functions cannot be assigned.

memo Use the CW [PLS] input and CCW [DIR] input at 5 to 24 VDC. When using signals at 24 VDC, connect an external resistor R1 (1.2 kΩ to 2.2 kΩ, 0.5 W or more). When using signals at 5 VDC, apply the voltage directly.

When the voltage of pulse input signals is 5 VDC

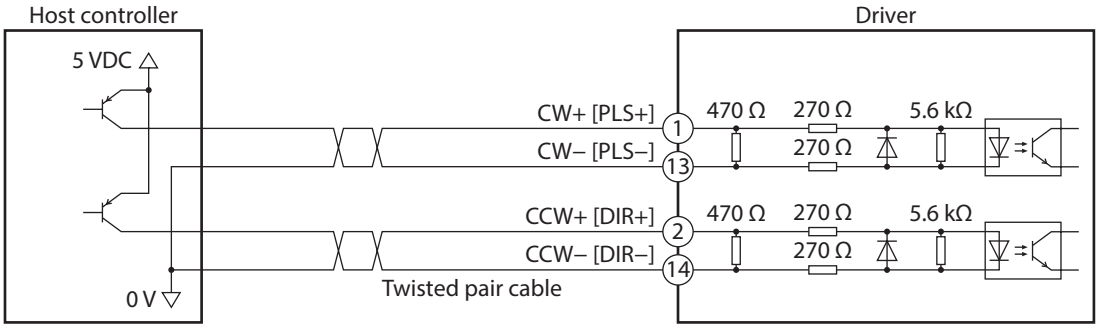

* Values in brackets [ ] are signals when the 1-pulse input mode is set.

When the voltage of pulse input signals is 24 VDC

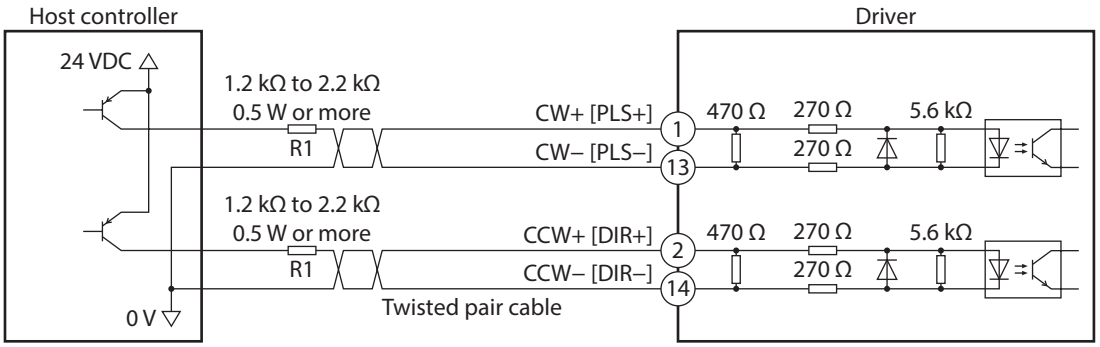

* Values in brackets [ ] are signals when the 1-pulse input mode is set.

4-7 Noise elimination measures

There are two types of electrical noises: One is a noise to invade into the driver from the outside and cause the driver malfunction, and the other is a noise to emit from the driver and cause peripheral equipment malfunction.
For the noise that is invaded from the outside, take measures to prevent the driver malfunction. It is needed to take adequate measures because signal lines are very likely to be affected by the noise.
For the noise that is emitted from the driver, take measures to suppress it.

■ Measures against electrical noise

There are the following three methods mainly to take measures against the electrical noise.

● Noise suppression

- When relays or electromagnetic switches are used, use noise filters or CR circuits to suppress surge generated by them.
- Use our connection cable when extending the wiring distance between the motor and the driver. Refer to p.95 for the model name. This is effective in suppressing the electrical noise emitted from the motor.
- Cover the driver by a metal plate such as aluminum. This is effective in shielding the electrical noise emitted from the driver.

● Prevention of noise propagation

- Connect a noise filter on the AC input side of the DC power supply.
- Place the power lines, such as the motor and the power supply cables, keeping a distance of 200 mm (7.87 in.) or more from the signal lines, and also do not bundle them or wire them in parallel. If a power cable and a signal cable have to cross, cross them at a right angle.
- Use shielded twisted pair cables for power lines and signal lines.
- Keep cables as short as possible without coiling and bundling extra lengths.
- Grounding multiple points will increase effect to block electrical noise because impedance on the grounding points is decreased. However, ground them so that a potential difference does not occur among the grounding points. I/O signal cable that includes a ground wire are provided in our product line. Refer to p.101 for the model name.
- To ground a shielded cable, use a metal cable clamp that can maintain contact with the entire circumference of the shielded cable, and ground as near the product as possible.

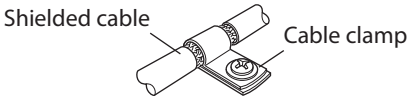

● Suppression of effect by noise propagation

- Loop the noise propagated cable around a ferrite core. Doing so will prevent the propagated noise invades into the driver or emits from the driver. The frequency band in which an effect by the ferrite core can be seen is generally 1 MHz or more. Check the frequency characteristics of the ferrite core used. When increasing the effect of noise attenuation by the ferrite core, loop the cable a lot.
- Change the transmission method of the pulse signal to the line driver type in order to prevent noise effects. If the pulse signal of the host controller is of the open collector type, use our pulse signal converter for noise immunity. Refer to p.102 for the model name.

■ Noise suppression products

● Noise filter

- Connect a noise filter (or equivalent) in the table on the AC input side of the DC power supply. When a power supply transformer is used, be sure to connect a noise filter on the AC input side of the power supply transformer. Doing so will prevent the propagated noise through the power line. Install the noise filter as close to the input terminals of DC power supply as possible.

Manufacturer	Part number
SOSHIN ELECTRIC CO., LTD.	HF2010A-UPF
Schaffner EMC	FN2070-10-06

- Use the AWG18 (0.75 mm^2) or thicker wire for the input and output cables of the noise filter, and secure firmly using a cable clamp or others so that the cable does not come off the enclosure.
- Place the input cable as far apart as possible from the output cable, and do not wire the cables in parallel. If the input and output cables are placed at a close distance or if they are wired in parallel, the noise in the enclosure affects the power cable through stray capacitance, and the noise suppressing effect will reduce.
- Connect the ground terminal of the noise filter to the grounding point, using as thick and short a wire as possible.
- When connecting a noise filter inside an enclosure, wire the input cable of the noise filter as short as possible. Wiring in long distance may reduce the noise suppressing effect.

■ Our noise suppression products

Check the model names on p.101 and p.102.

- **I/O signal cable**

  This is a shielded cable for good noise immunity to connect the driver and host controller. The ground wire useful to grounding is extracted from both ends of the cable. The EMC testing is conducted using our I/O signal cable.

- **Pulse signal converter for noise immunity**

  This product converts a pulse signal, which is output from the open collector output, to a pulse signal for good noise immunity by outputting the pulse signal again from the differential output.

- **Surge suppressor**

  This product is effective to suppress the surge which occurs in a relay contact part. Connect it when using a relay or electromagnetic switch. CR circuit for surge suppression and CR circuit module are provided.

4-8 Conformity to the EMC Directive/Regulations

Effective measures must be taken against the EMI that the motor and the driver may give to adjacent control-system equipment, as well as the EMS of the motor and the driver itself, in order to prevent a serious functional impediment in the machinery. The use of the following installation and wiring methods will enable the motor and the driver to be compliant with the EMC Directive/Regulations.
Oriental Motor conducts EMC testing on its motors and drivers in accordance with "Example of installation and wiring" on p.80
The user is responsible for ensuring the machine's compliance with the EMC, based on the installation and wiring explained next.

⚠CAUTION This equipment is not intended for use in residential environments nor for use on a low-voltage public network supplied in residential premises, and it may not provide adequate protection to radio reception interference in such environments.

- **Connecting the noise filter**

  In large electrically noisy environments, connect a noise filter. Refer to "Noise filter" on p.78 for details.

- **Connecting the power supply**

  Use a DC power supply compliant with the EMC Directive/Regulations.
  Wire and ground the power supply over the shortest possible distance using a shielded cable. Refer to "Prevention of noise propagation" on p.78 for how to ground the shielded cable.

- **Connecting the motor cable**

  Use our connection cable when extending the wiring distance between the motor and the driver. Refer to p.95 for the model name.

- **Connecting the signal cable**

  Refer to "Prevention of noise propagation" on p.78.

- **Grounding method**
  - The cable used to ground the motor, the driver, and the noise filter must be as thick and short as possible so that no potential difference is generated.
  - Choose a large, thick and uniformly conductive surface for the grounding point.
  - Refer to the p.71 for how to ground the driver.

● Example of installation and wiring

Use connection cables of Oriental Motor to connect the motor. Check the cable models on p.95.
The figure shows an example when the cable type electromagnetic brake motor is used.
The line driver system is used to drive the pulse signals.

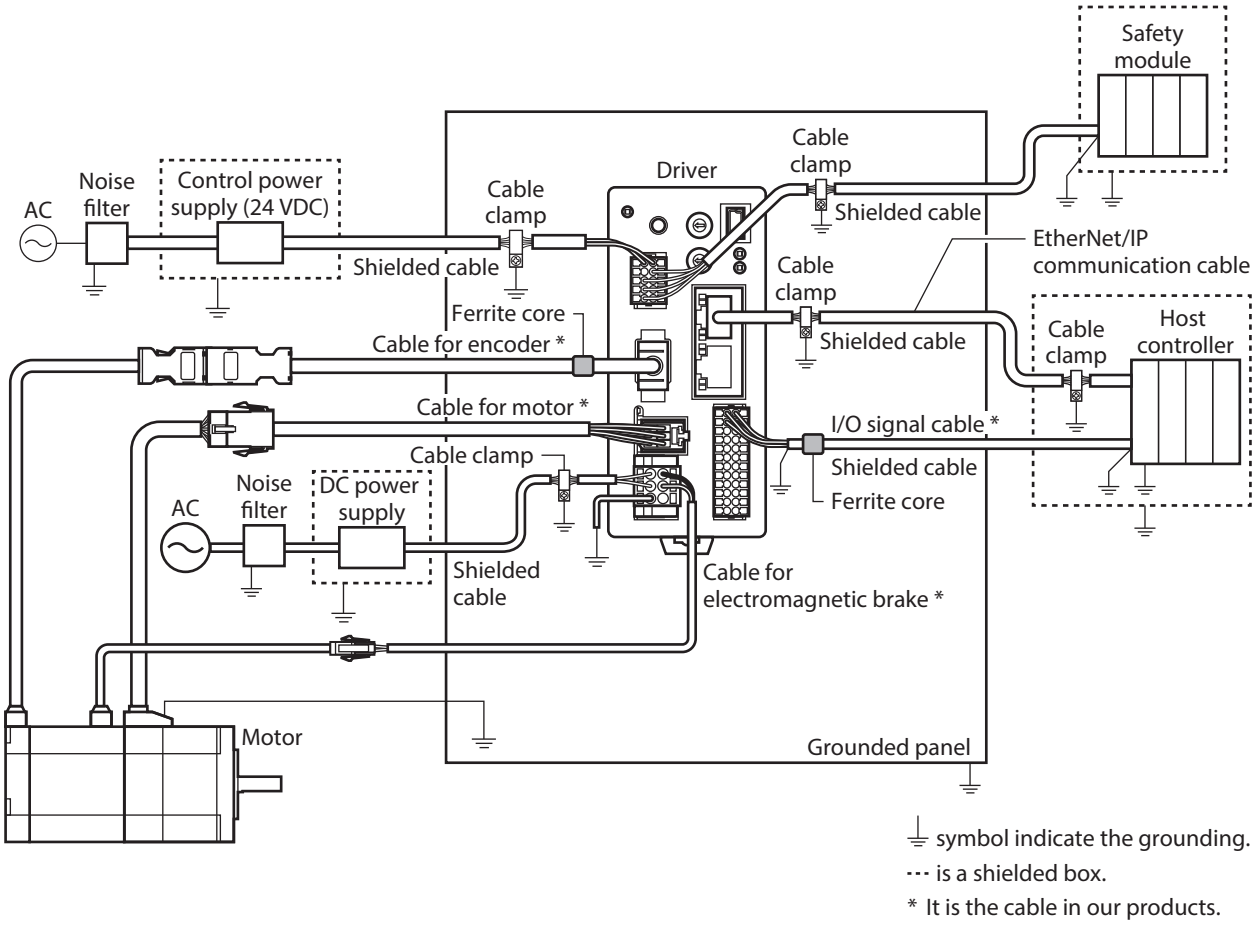

⏚ symbol indicate the grounding.
--- is a shielded box.
* It is the cable in our products.

Note The driver uses parts that are sensitive to electrostatic charge. Take measures against static electricity since static electricity may cause the driver to malfunction or suffer damage.

5 Setting of IP address

The IP address, subnet mask, and default gateway are configured respectively as follows.

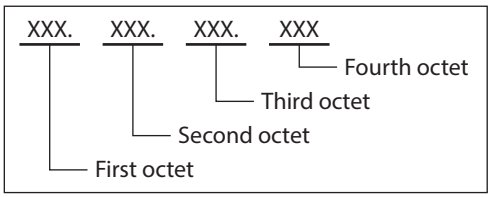

The IP address is set using the switches on the driver, parameters, and the DHCP server. Items that can be set vary depending on the setting method.

• When using the IP address setting switches

IP address	XXX.	XXX.	XXX.	XXX	← Set with the IP address setting switches
Subnet mask	XXX.	XXX.	XXX.	XXX	← Set with parameters or DHCP server
Default gateway	XXX.	XXX.	XXX.	XXX	

• When setting with parameters or DHCP server

IP address	XXX.	XXX.	XXX.	XXX	
Subnet mask	XXX.	XXX.	XXX.	XXX	← Set all items with parameters or DHCP server
Default gateway	XXX.	XXX.	XXX.	XXX	

5-1 When using the IP address setting switches

Set the IP address with the IP address setting switches of the driver, and the subnet mask and default gateway with the parameters.

■ Setting of IP address

Set the fourth octet of the IP address using two IP address setting switches (IP ADDR ×16, ×1).
The IP address setting switches are hexadecimal number. Convert the IP address from decimal to hexadecimal to set.

Factory setting: ×16: 0, ×1: 0 (Setting of parameter or DHCP server is enabled)

Setting example

Setting of switches		Value of IP address	Note
×16	×1		
0	0	The setting of the parameter or DHCP server is enabled.	Whether either the parameter or the DHCP server is enabled can be checked with the "Configuration control" parameter.
0	1	XXX.XXX.XXX.1	The fourth octet is set to "1."
F	E	XXX.XXX.XXX.254	The fourth octet is set to "254."
F	F	192.168.1.1	This value is applied regardless of the setting of the parameter and DHCP server.

Note

- When the switches were set, turn on the control power supply again. The new setting will be enabled when the control power supply is turned on again.
- When connecting two or more EtherNet/IP compatible products, set so that an IP address is not duplicated. If an IP address is duplicated, a communication error of the "IP address conflict" is detected.

memo
- Set the first octet to third octet of the IP address with the parameters.
- If the IP address setting switches are other than "00," the "Configuration control" parameter is automatically set to "0: Parameter."

■ Setting of subnet mask and default gateway

Set the subnet mask and the default gateway with the parameters.

Related parameters

Name	Description	Setting range	Initial value
Network mask 1	Sets the first octet of the subnet mask.	0 to 255	255
Network mask 2	Sets the second octet of the subnet mask.		255
Network mask 3	Sets the third octet of the subnet mask.		255
Network mask 4	Sets the fourth octet of the subnet mask.		0
Gateway address 1	Sets the first octet of the default gateway.	0 to 255	0
Gateway address 2	Sets the second octet of the default gateway.		0
Gateway address 3	Sets the third octet of the default gateway.		0
Gateway address 4	Sets the fourth octet of the default gateway.		0

5-2 When setting with parameters

Set the IP address setting switches of the driver to "00" and the "Configuration control" parameter to "0: Parameter." The parameters and the DHCP server cannot be used in combination.

Related parameters

Name	Description	Setting range	Initial value
Configuration control	Sets how to obtain the IP address.	0: Parameter 2: DHCP server	2
IP address 1	Sets the first octet of the IP address.	0 to 255	192
IP address 2	Sets the second octet of the IP address.		168
IP address 3	Sets the third octet of the IP address.		1
IP address 4	Sets the fourth octet of the IP address.		1
Network mask 1	Sets the first octet of the subnet mask.	0 to 255	255
Network mask 2	Sets the second octet of the subnet mask.		255
Network mask 3	Sets the third octet of the subnet mask.		255
Network mask 4	Sets the fourth octet of the subnet mask.		0
Gateway address 1	Sets the first octet of the default gateway.	0 to 255	0
Gateway address 2	Sets the second octet of the default gateway.		0
Gateway address 3	Sets the third octet of the default gateway.		0
Gateway address 4	Sets the fourth octet of the default gateway.		0

Note
When connecting two or more EtherNet/IP compatible products, set so that an IP address is not duplicated. If an IP address is duplicated, a communication error of the "IP address conflict" is detected.

5-3 When setting with DHCP server

The IP address, subnet mask and default gateway are automatically assigned from the DHCP server.
Set the IP address setting switches of the driver to "00" and the "Configuration control" parameter to "2: DHCP server."
The parameters and the DHCP server cannot be used in combination.

memo If the control power supply is shut off, the IP address obtained from the DHCP server is cleared.

Related parameter

Name	Description	Setting range	Initial value
Configuration control	Sets how to obtain the IP address.	0: Parameter 2: DHCP server	2

6 Power removal function

The power removal function is a function that stops supplying the power to the motor by the hardware.
This function shuts off the drive signal of the inverter circuit that controls the motor current with two input channels (HWTO1 input, HWTO 2 input). This brings a shutoff state of the power supplying to the motor (power removal status).
The power removal function is assumed to be used to prevent unexpected starting of the moving parts of equipment when an operator works inside the operating range of the moving parts.

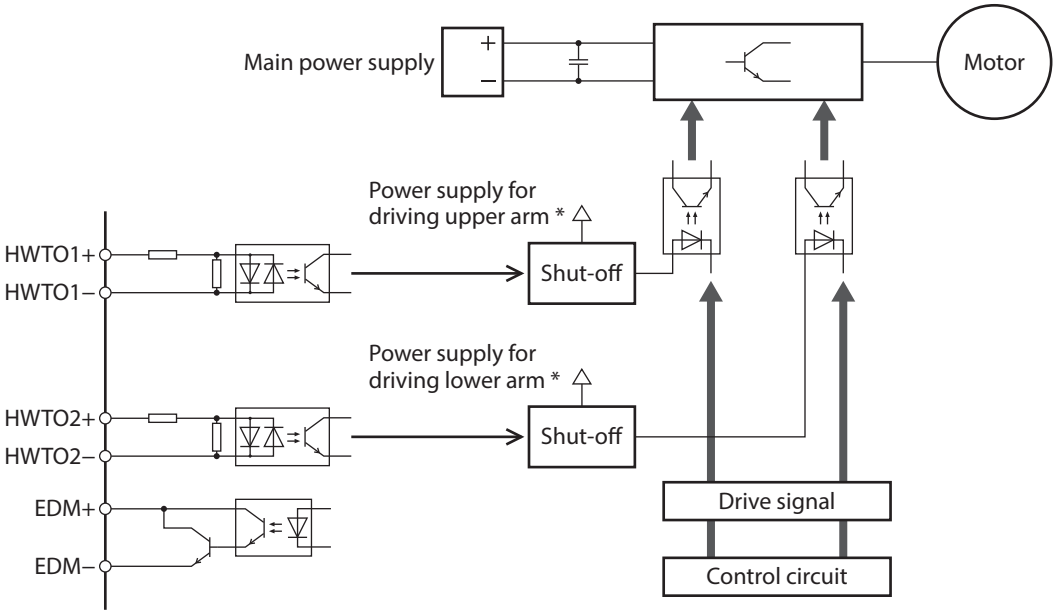

* Turning the HWTO1 input OFF causes the upper arm drive signal of the inverter circuit to shut off.
Turning the HWTO2 input OFF causes the lower arm drive signal of the inverter circuit to shut off.

Note Be sure to check the motor is in a standstill state before executing the power removal function. If the power removal function is executed while the motor is operated, it may cause damage to the motor, driver, or equipment.

6-1 Safety parameters

Item	Specifications
Safety integrity level	SIL 3*
Average frequency of a dangerous failure per hour	PFH=4.85×10^{-9} [1/h]
Hardware fault tolerance	HFT=1
Subsystem	Type A
Mission time	20 years
Response time	15 ms or less
Performance level	PL e (Category 3)*
Mean time to dangerous failure	MTTFd: High
Average diagnostic coverage	DC_{avg}: High
Stop category	0 (IEC 60204-1)

* It is necessary to monitor the EDM output using an external device.

6-2 Notes when using the power removal function

- **When the power removal function is used, be sure to conduct a risk assessment of equipment in advance and check that the safety requirements of the safety-related parts of a control system are satisfied.**
- **The design of the safety-related parts of a control system using the power removal function should be performed by qualified personnel who are trained in the relevant safety standards and understand the contents of this chapter.**
- **If the power removal function operates, the motor output shaft may rotate due to external forces (such as gravity on a vertical axis). To hold the motor output shaft in position, install an external brake mechanism or equivalent. The brake mechanism of the electromagnetic brake motor is used for the purpose to hold the position. Do not use the brake mechanism of the electromagnetic brake motor for braking the motor rotation. This may result in injury or damage to equipment.**
- **If the power removal function operates, the driver stops supplying the power to the motor. However, the power supplying to the driver is not shut off, and the driver is not performed electrical insulation either. Before performing maintenance or inspection, always turn off the driver power, and check the MAIN POWER LED is turned off. Failure to do so may result in electric shock.**
- **If the inverter circuit is failed, the motor output shaft may rotate up to 180 degrees in an electrical angle (3.6 degrees in a mechanical angle) even when the power removal function operates. Make sure this movement does not cause hazardous situations. Failure to do so may result in injury or damage to equipment.**
- **Connect the I/O signals related to the power removal function to an external device that is certified under safety standards.**
- **Be sure to perform the verification testing of the power removal function when starting up or maintaining the equipment, or when replacing the driver. This may result in injury or damage to equipment. If the power removal function is used in an incorrect state such as incorrect wiring of I/O signals, the power removal function may not operate properly, causing hazardous situations.**

6-3 I/O signals

■ HWTO1 input, HWTO2 input

The HWTO1 input and HWTO2 input are signals to operate the power removal function.
Connect 24 VDC to the HWTO1+ and HWTO2+ terminals and 0 VDC to the HWTO1– and HWTO2– terminals.

Note Provide individual contacts for operating the HWTO1 input and the HWTO2 input.

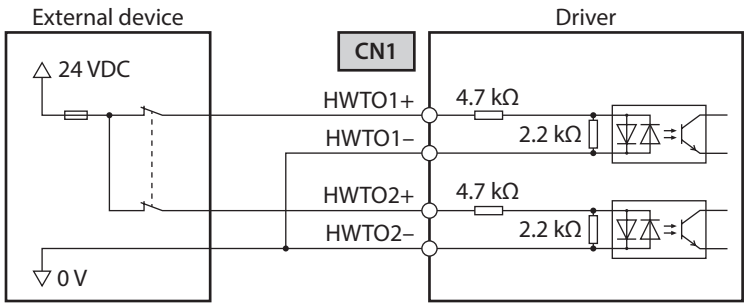

Specification

- Input voltage: 24 VDC±10 %

Safety input-off shot pulse for self-diagnosis of external device

If the safety output signal output from an external device includes the safety input-off shot pulse for self-diagnosis, use an external device which pulse width is 1 ms or less. If the OFF-time of the HWTO1 input or the HWTO2 input by the safety input-off shot pulse is 1 ms or less, the power removal function does not operate.

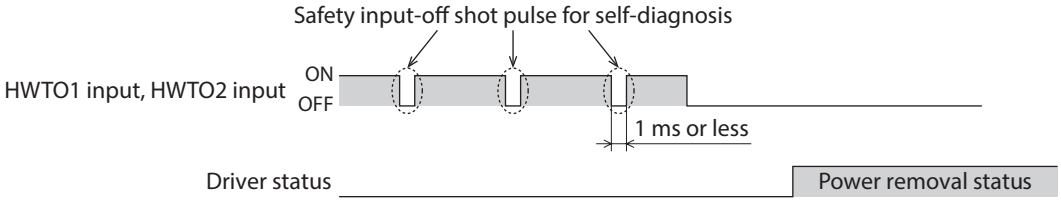

■ EDM output

The EDM output is a signal to monitor a failure in the power removal function.

Note The EDM output is not an output signal to ensure the safety. Do not use the EDM output for any other purpose except for monitoring a failure.

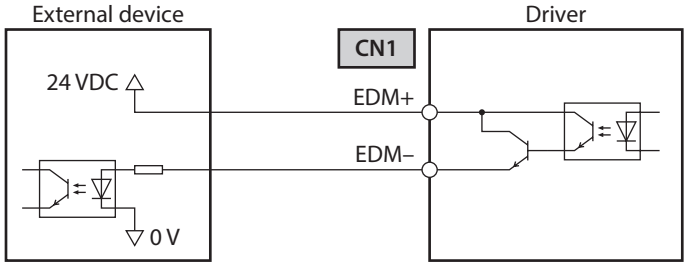

Specifications

- Voltage: 30 VDC or less
- Current: 50 mA or less
- Output saturated voltage: 1.6 V max.

6-4 Operation of power removal function

■ Transition to power removal status

If both the HWTO1 and HWTO2 inputs are turned OFF, the driver transitions to the power removal status, and the power supplying to the motor is shut off by the hardware, causing the motor to put into a non-excitation state.
In the power removal status, the status of the motor and driver will be as follows. (When the "HWTO mode selection" parameter is set to "0: Alarm is not present (initial value)")

- The ETO-MON output is ON.
- The DCMD-RDY output, the READY output, the PLS-RDY output, and the MBC output are OFF.
- The PWR/ALM LED blinks in green.
- When an electromagnetic brake motor is used, the electromagnetic brake is in a state of holding the motor shaft.

Note

- Be sure to check the motor is in a standstill state before executing the power removal function. If the power removal function is executed while the motor is operated, it may cause damage to the motor, driver, or equipment.
- It takes 15 ms maximum from when the HWTO1 and HWTO2 inputs are turned OFF until when the driver is in the power removal status.
- To transition to the power removal status, be sure to turn the HWTO1 and HWTO2 inputs OFF for at least 15 ms.
- The ETO-MON output, the DCMD-RDY output, the READY output, the PLS-RDY output, the MBC output, the PWR/ALM LED, and the electromagnetic brake are not safety-related parts of a control system.

● **Timing chart**

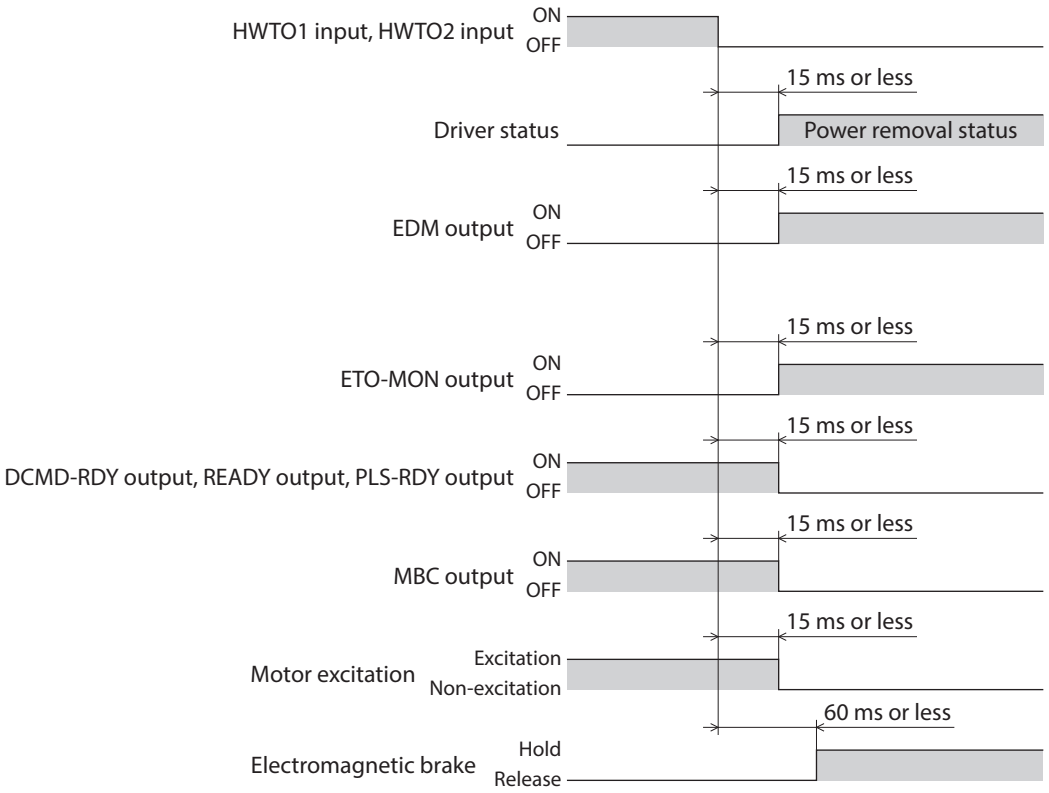

■ Return from power removal status

If both the HWTO1 and the HWTO2 inputs are turned ON, the power removal status is released. At this time, the motor remains in a non-excitation state.
To excite the motor, turn the ETO-CLR input ON (initial value: enabled at the ON edge). When the ETO-CLR input is turned ON, the status of the motor and driver will be as follows.

- The ETO-MON output is OFF.
- The DCMD-RDY output, the READY output, the PLS-RDY output, and the MBC output are ON.
- The PWR/ALM LED is lit in green.
- When an electromagnetic brake motor is used, the electromagnetic brake is in a state of releasing the motor shaft.

Note

- Check the equipment is in a safe state before returning the driver from the power removal status.
- Even if either the HWTO1 input or the HWTO2 input is turned ON, the power removal status cannot be released.
- If the ON-time of the HWTO1 and HWTO2 inputs is less than 15 ms, the power removal status may not be released.
- When the power removal status is released, a shut-off state of supplying the power to the motor by the hardware is also released.
- The ETO-CLR input is not safety-related part of a control system.

● **Timing chart**

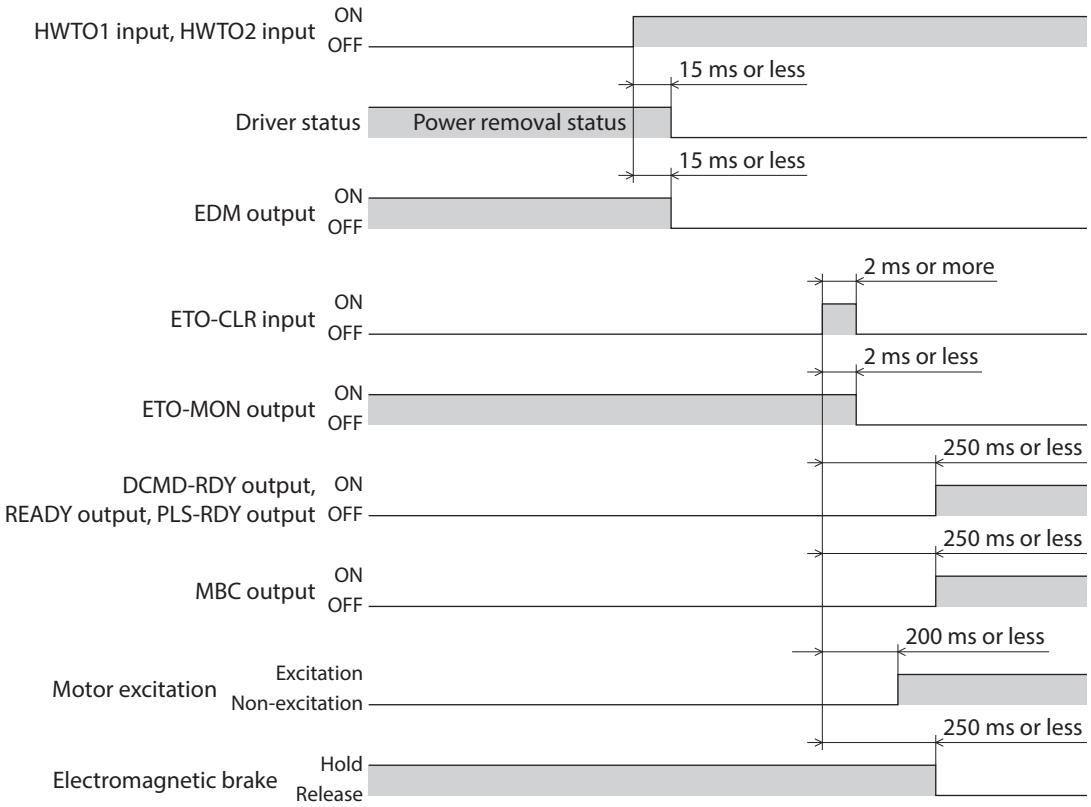

■ Detection for failure of the power removal function

Monitoring the input status of the HWTO1 and HWTO2 inputs and the output status of the EDM output relative to the inputs can detect the failure of the power removal function.
When the power removal function is properly operated, the combination of each signal is any of the following. Combinations other than the table indicate the power removal function of the driver is in a failure state.

HWTO1 input	HWTO2 input	EDM output
ON	**ON**	OFF
OFF	OFF	**ON**
ON	OFF	OFF
OFF	**ON**	OFF

If only one of the HWTO1 input and the HWTO2 input is ON or OFF, the external device or wiring has failed. Check the cause and take a measure immediately. At this time, the EDM output is in an OFF state and the motor puts into a non-excitation state.

Note

- Do not release the power removal function when the EDM output is in an OFF state.
- If the driver or external device is failed or an error in wirings occurs, check the cause and take a measure immediately.
- The power removal function of the driver is classified in Category 3 of ISO 13849-1. Not all dangerous failures can be detected with the EDM output.

6-5 Example of use

This section describes the connection method that the power removal function operates when the door (guard) is opened using a safety module.

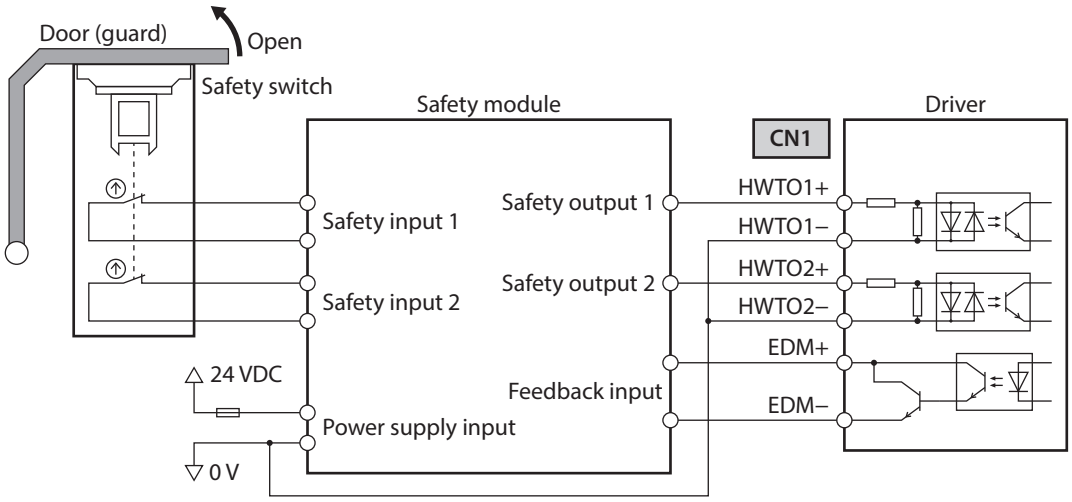

■ Operation in normal state

- **When the door (guard) is opened**

Open the door (guard).
↓
The safety input 1 and the safety input 2 of the safety module are turned OFF.
↓
The safety output 1 and the safety output 2 of the safety module are turned OFF.
↓
The HWTO1 input and the HWTO2 input of the driver are turned OFF.
↓
The power removal function operates and the EDM output is turned ON.

- **When the door (guard) is closed**

Close the door (guard).
↓
The safety input 1 and the safety input 2 of the safety module are turned ON.
↓
The safety output 1 and the safety output 2 of the safety module are turned ON because the feedback input (the EDM output of the driver) is ON.
↓
The HWTO1 input and the HWTO2 input of the driver are turned ON, and the power removal function is released.

■ How to detect a failure

If a failure that the HWTO1 input or the HWTO2 input is not turned OFF occurs, the EDM output is not turned ON. A failure can be detected because the safety module is not reset even if the door (guard) is closed and the motor cannot be started.

6-6 Verification testing of power removal function

- Be sure to perform the verification testing of the power removal function when starting up or maintaining the equipment, or when replacing the driver.
- According to use conditions of the safety related parts of a control system, perform a verification testing of the power removal function at least once three months.
- Keep the verification result on record.

■ Description of verification testing

1. Turn on the control power supply and main power supply of the driver while both the HWTO1 and HWTO2 inputs are an ON state.
   Check that the motor puts into an excitation state and the EDM output is an OFF state.
2. Turn both the HWTO1 input and the HWTO2 input OFF.
   Check that the motor puts into a non-excitation state and the EDM output is turned ON.

6-7 Related functions

Note The related functions are not safety-related parts of a control system.

- **ETO-CLR input**

If the ETO-CLR input is turned ON after both the HWTO1 and HWTO2 inputs are turned ON to release the power removal function, the motor puts into an excitation state.

Related parameter

Parameter ID		Name	Description	Initial value
Dec	Hex			
409	0199h	ETO reset action (ETO-CLR)	Sets the judgment level of the signal when the motor is excited by the ETO-CLR input. **[Setting range]** 1: ON-Edge 2: ON-Level	1

- **HWTOIN-MON output**

If the HWTO1 input or the HWTO2 input is turned OFF, the HWTOIN-MON output is turned ON.

- **ETO-MON output**

If the HWTO1 input or the HWTO2 input is turned OFF when the "HWTO mode selection" parameter is set to "0: Alarm is not present," the ETO-MON output is turned ON. If the motor is excited with the ETO-CLR input after both the HWTO1 and HWTO2 inputs are turned ON, the ETO-MON output is turned OFF.

Related parameter

Parameter ID		Name	Description	Initial value
Dec	Hex			
400	0190h	HWTO mode selection	Generates an alarm when the HWTO1 input or the HWTO2 input is turned OFF. **[Setting range]** 0: Alarm is not present 1: Alarm is present	0

- **EDM-MON output**

If both the HWTO1 and HWTO2 inputs are turned OFF, the EDM-MON output is turned ON.

Note Be sure to use the EDM output of CN1 to detect the failure of the power removal function.

- **Alarm of HWTO input detection**

If the "HWTO mode selection" parameter is set to "1: Alarm is present," an alarm will be generated when either the HWTO1 input or the HWTO2 input is turned OFF. (HWTO input detection, alarm code 68h)
At this time, the PWR/ALM LED blinks once in red repeatedly.
When the "HWTO mode selection" parameter is set to "1: Alarm is present," the motor can be excited if the ALM-RST input is turned from OFF to ON after the power removal function is released. (It is enabled at the ON edge.)

Related parameter

Parameter ID		Name	Description	Initial value
Dec	Hex			
400	0190h	HWTO mode selection	Generates an alarm when the HWTO1 input or the HWTO2 input is turned OFF. **[Setting range]** 0: Alarm is not present 1: Alarm is present	0

- **Alarm of HWTO input circuit error**

If a time after either the HWTO1 input or the HWTO2 input is turned OFF until the other input is turned OFF exceeds the value set in the "HWTO delay time of checking dual system" parameter, an alarm will be generated. (HWTO input circuit error, alarm code 53h)
At this time, the PWR/ALM LED blinks twice in red repeatedly.

Related parameter

Parameter ID		Name	Description	Initial value
Dec	Hex			
401	0191h	HWTO delay time of checking dual system	If a time after either the HWTO1 input or the HWTO2 input is turned OFF until the other input is turned OFF exceeds the value set in this parameter, an alarm will be generated. **[Setting range]** 0 to 10 (disable), 11 to 100 ms	0

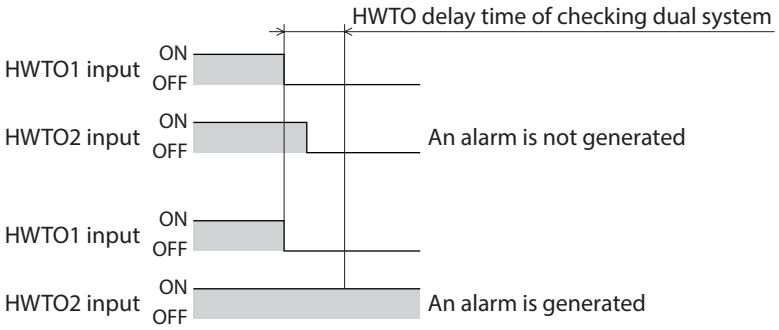

- **ETO reset ineffective period**

The motor cannot be excited even if the ETO-CLR input is turned ON until the time set in the "ETO reset ineffective period" parameter is elapsed.

Related parameter

Parameter ID		Name	Description	Initial value
Dec	Hex			
408	0198h	ETO reset ineffective period	Sets a time to disable the ETO-CLR input if the motor is excited by the ETO-CLR input after both the HWTO1 and HWTO2 inputs are turned ON. The motor cannot be excited until the time set in this parameter is exceeded even if the ETO-CLR input is turned ON. **[Setting range]** 0 to 100 ms	0

When the ETO-CLR input is turned ON before the time set in the "ETO reset ineffective period" parameter is elapsed (when the motor is excited at the ON edge of the input)

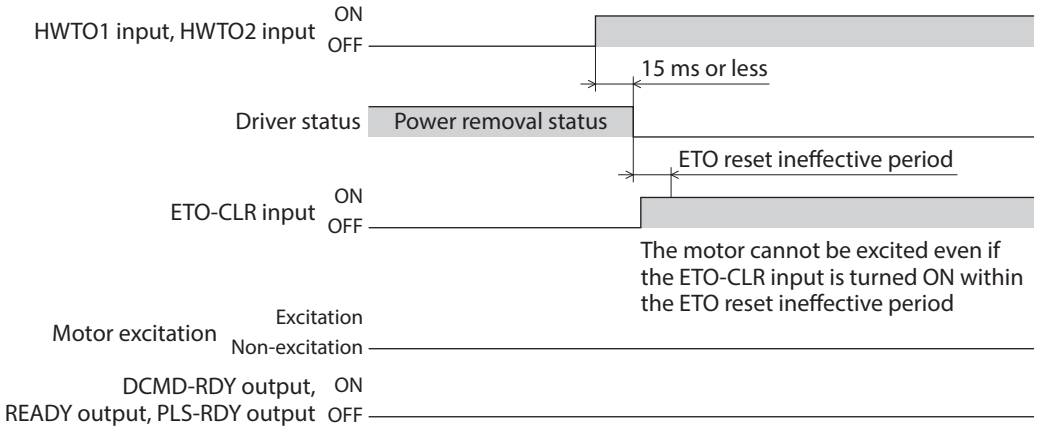

When the ETO-CLR input is turned ON after the time set in the "ETO reset ineffective period" parameter is elapsed (when the motor is excited at the ON edge of the input)

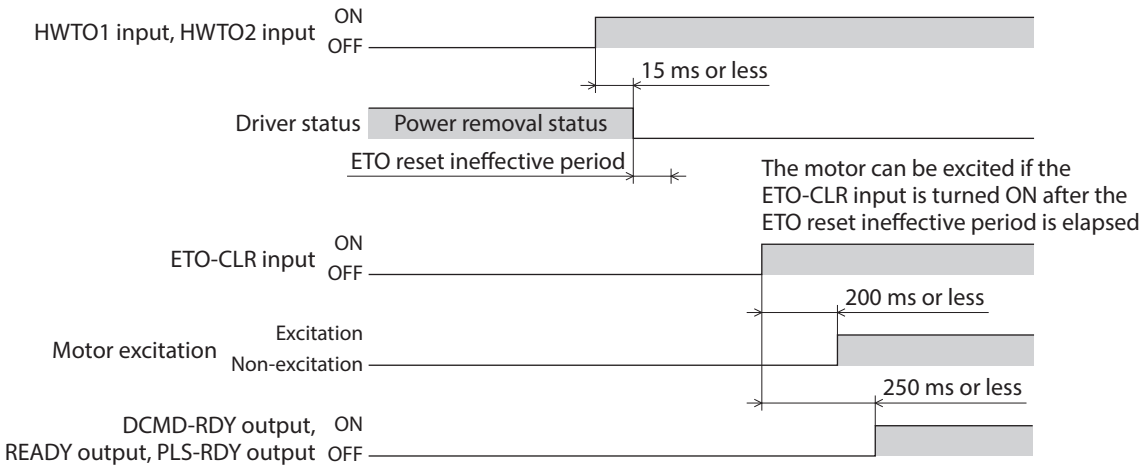

- **Signal judgment level of ETO-CLR input**

  If the "ETO reset action (ETO-CLR)" parameter is set to "2: ON-level," the motor can be excited at the ON level of the ETO-CLR input instead of the ON edge. (Initial value: ON edge)

  Related parameter

Parameter ID		Name	Description	Initial value
Dec	Hex			
409	0199h	ETO reset action (ETO-CLR)	Sets the judgment level of the signal when the motor is excited by the ETO-CLR input. **[Setting range]** 1: ON-Edge 2: ON-Level	1

- **Motor excitation by input signals other than ETO-CLR input**

  The function to excite the motor can be added to the ALM-RST input, the C-ON input, and the STOP input using parameters.
  In the initial value, this function is set to the STOP input only.

  Related parameters

Parameter ID		Name	Description	Initial value
Dec	Hex			
410	019Ah	ETO reset action (ALM-RST)	Excites the motor by the ALM-RST input after both the HWTO1 and HWTO2 inputs are turned ON. **[Setting range]** 0: Disable 1: Excitation at ON edge	0
411	019Bh	ETO reset action (C-ON)	Excites the motor by the C-ON input after both the HWTO1 and HWTO2 inputs are turned ON. **[Setting range]** 0: Disable 1: Excitation at ON edge	0
412	019Ch	ETO reset action (STOP)	Excites the motor by the STOP input after both the HWTO1 and HWTO2 inputs are turned ON. **[Setting range]** 0: Disable 1: Excitation at ON edge	1

7 Inspection and maintenance

7-1 Inspection

It is recommended that periodic inspections are conducted for the items listed below after each operation of the motor. If an abnormal condition is noted, discontinue any use and contact your nearest Oriental Motor sales office.

■ Inspection item

- Check if the openings in the driver are clogged.
- Check if the installation place of the driver is loose.
- Check if any of the connection parts of the driver is loose.
- Check if dust is deposited on the driver.
- Check if the driver has unusual smells or appearance defects.

Note The driver uses semiconductor components. Static electricity may damage the semiconductor components of the driver, so be extremely careful when handling them.

7-2 Warranty

Check on the Oriental Motor Website for the product warranty.

7-3 Disposal

Dispose the product correctly in accordance with laws and regulations, or instructions of local governments.

8 Cables

8-1 Connection cable (For cable type)

■ Connection cable set/Flexible connection cable set (For AZM14, AZM15, AZM24, AZM26)

These cables are used when connecting a motor and a driver.

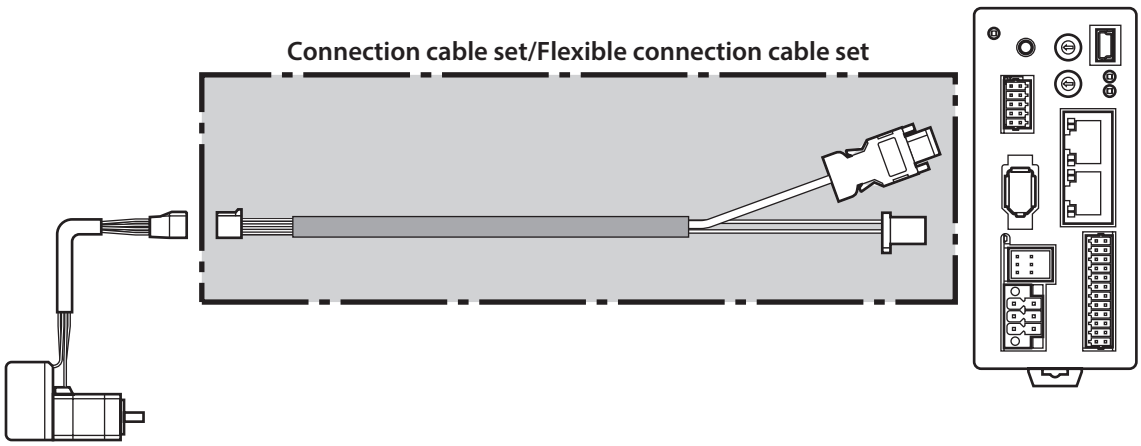

memo When installing the motor on a moving part, use a flexible cable.

● **Connection cable set**

For motor/encoder

Model	Length [m (ft.)]
CC005VZ2F2	0.5 (1.6)
CC010VZ2F2	1 (3.3)
CC015VZ2F2	1.5 (4.9)
CC020VZ2F2	2 (6.6)
CC025VZ2F2	2.5 (8.2)
CC030VZ2F2	3 (9.8)
CC040VZ2F2	4 (13.1)
CC050VZ2F2	5 (16.4)
CC070VZ2F2	7 (23.0)
CC100VZ2F2	10 (32.8)
CC150VZ2F2	15 (49.2)
CC200VZ2F2	20 (65.6)

● **Flexible connection cable set**

For motor/encoder

Model	Length [m (ft.)]
CC005VZ2R2	0.5 (1.6)
CC010VZ2R2	1 (3.3)
CC015VZ2R2	1.5 (4.9)
CC020VZ2R2	2 (6.6)
CC025VZ2R2	2.5 (8.2)
CC030VZ2R2	3 (9.8)
CC040VZ2R2	4 (13.1)
CC050VZ2R2	5 (16.4)
CC070VZ2R2	7 (23.0)
CC100VZ2R2	10 (32.8)
CC150VZ2R2	15 (49.2)
CC200VZ2R2	20 (65.6)

■ Connection cable set/Flexible connection cable set (For AZM46, AZM48, AZM66, AZM69)

These cables are used when connecting a motor and a driver. It is a set of two cables for the motor and the encoder. For the cable set of electromagnetic brake motors, a set of three cables for the motor, the encoder, and the electromagnetic brake is provided.

Connection cable set/Flexible connection cable set

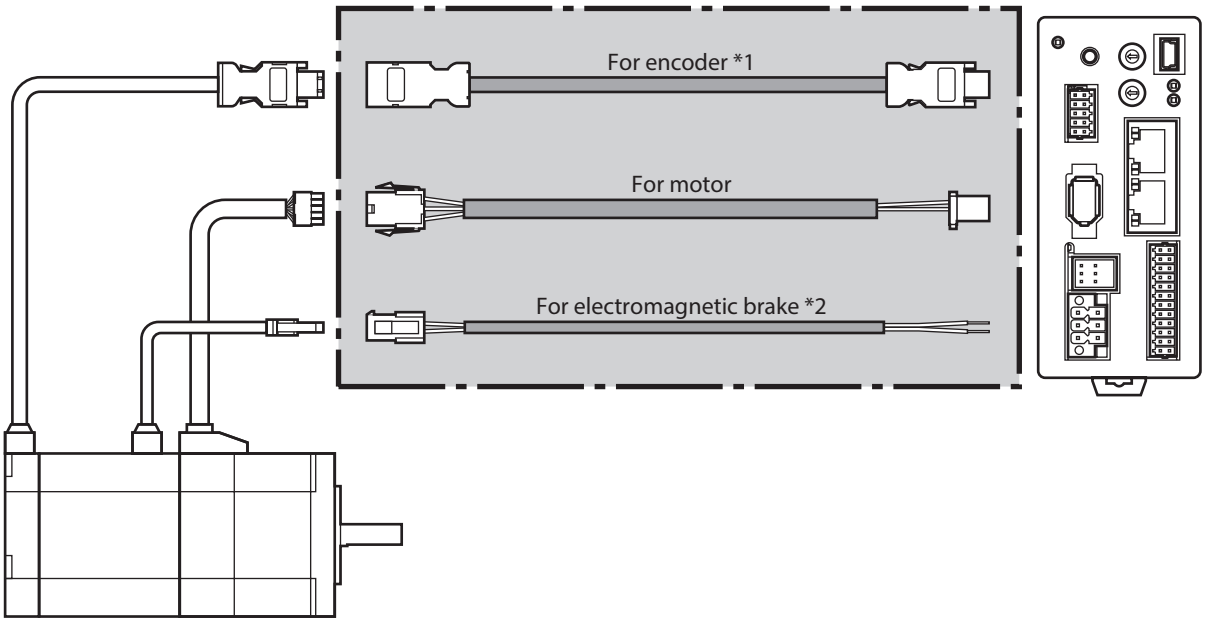

*1 Use the cable for encoder when the length of the encoder cable of motor is not enough.
*2 Only when the motor is the electromagnetic brake type.

memo When installing the motor on a moving part, use a flexible cable.

● **Connection cable set**

For motor/encoder

Model	Length [m (ft.)]
CC005VZF2	0.5 (1.6)
CC010VZF2	1 (3.3)
CC015VZF2	1.5 (4.9)
CC020VZF2	2 (6.6)
CC025VZF2	2.5 (8.2)
CC030VZF2	3 (9.8)
CC040VZF2	4 (13.1)
CC050VZF2	5 (16.4)
CC070VZF2	7 (23.0)
CC100VZF2	10 (32.8)
CC150VZF2	15 (49.2)
CC200VZF2	20 (65.6)

For motor/encoder/electromagnetic brake

Model	Length [m (ft.)]
CC005VZFB2	0.5 (1.6)
CC010VZFB2	1 (3.3)
CC015VZFB2	1.5 (4.9)
CC020VZFB2	2 (6.6)
CC025VZFB2	2.5 (8.2)
CC030VZFB2	3 (9.8)
CC040VZFB2	4 (13.1)
CC050VZFB2	5 (16.4)
CC070VZFB2	7 (23.0)
CC100VZFB2	10 (32.8)
CC150VZFB2	15 (49.2)
CC200VZFB2	20 (65.6)

● **Flexible connection cable set**

For motor/encoder

Model	Length [m (ft.)]
CC005VZR2	0.5 (1.6)
CC010VZR2	1 (3.3)
CC015VZR2	1.5 (4.9)
CC020VZR2	2 (6.6)
CC025VZR2	2.5 (8.2)
CC030VZR2	3 (9.8)
CC040VZR2	4 (13.1)
CC050VZR2	5 (16.4)
CC070VZR2	7 (23.0)
CC100VZR2	10 (32.8)
CC150VZR2	15 (49.2)
CC200VZR2	20 (65.6)

For motor/encoder/electromagnetic brake

Model	Length [m (ft.)]
CC005VZRB2	0.5 (1.6)
CC010VZRB2	1 (3.3)
CC015VZRB2	1.5 (4.9)
CC020VZRB2	2 (6.6)
CC025VZRB2	2.5 (8.2)
CC030VZRB2	3 (9.8)
CC040VZRB2	4 (13.1)
CC050VZRB2	5 (16.4)
CC070VZRB2	7 (23.0)
CC100VZRB2	10 (32.8)
CC150VZRB2	15 (49.2)
CC200VZRB2	20 (65.6)

■ Extension cable set/Flexible extension cable set (For AZM14, AZM15, AZM24, AZM26)

These cables are used when extending the connection cable.
Use if the length of the connection cable used is not enough when extending the distance between a motor and a driver.

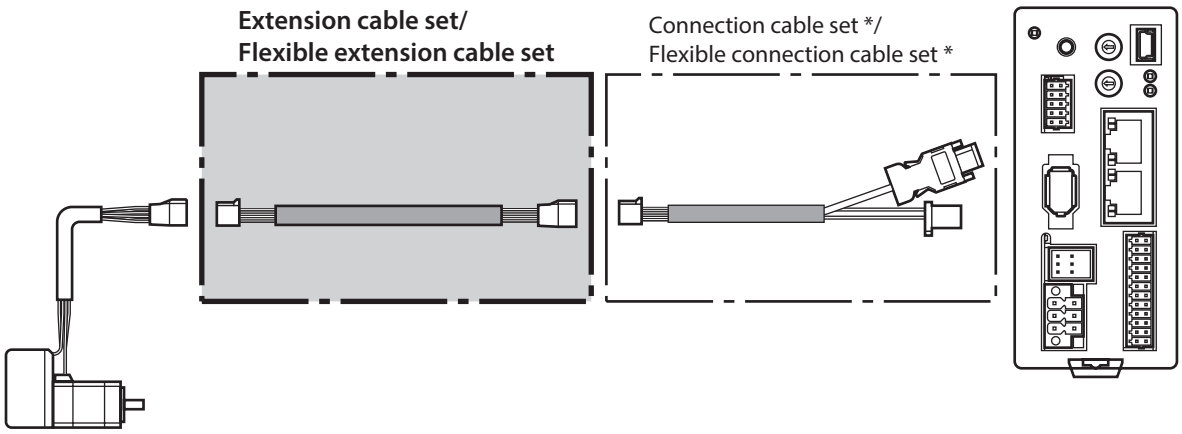

* Use the connection cable used.

memo

- When installing the motor on a moving part, use a flexible cable.
- When extending the wiring length by connecting an extension cable to the connection cable, keep the total cable length to 20 m (65.6 ft.) or less.

● **Extension cable set**

For motor/encoder

Model	Length [m (ft.)]
CC010VZ2FT	1 (3.3)
CC020VZ2FT	2 (6.6)
CC030VZ2FT	3 (9.8)
CC050VZ2FT	5 (16.4)
CC070VZ2FT	7 (23.0)
CC100VZ2FT	10 (32.8)
CC150VZ2FT	15 (49.2)

● **Flexible extension cable set**

For motor/encoder

Model	Length [m (ft.)]
CC010VZ2RT	1 (3.3)
CC020VZ2RT	2 (6.6)
CC030VZ2RT	3 (9.8)
CC050VZ2RT	5 (16.4)
CC070VZ2RT	7 (23.0)
CC100VZ2RT	10 (32.8)
CC150VZ2RT	15 (49.2)

■ Extension cable set/Flexible extension cable set (For AZM46, AZM48, AZM66, AZM69)

These cables are used when extending the connection cable.
Use if the length of the connection cable used is not enough when extending the distance between a motor and a driver.
It is a set of two cables for the motor and the encoder. For the cable set of electromagnetic brake motors, a set of three cables for the motor, the encoder, and the electromagnetic brake is provided.

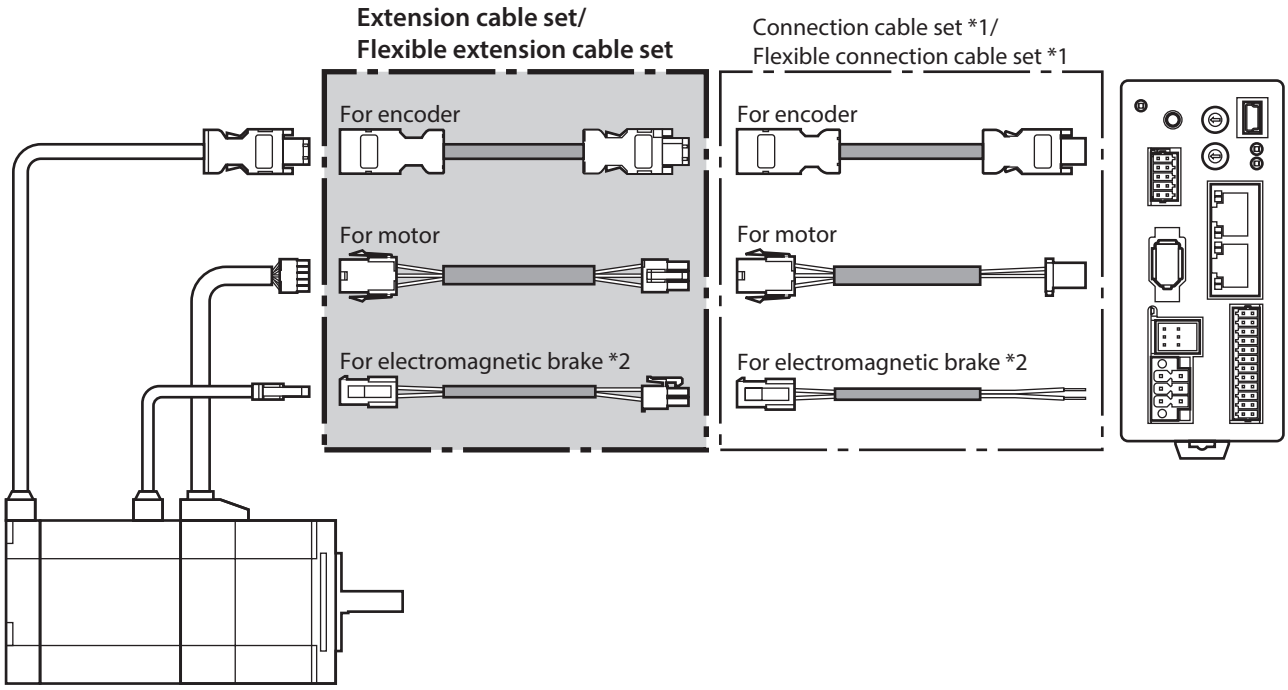

*1 Use the connection cable used.
*2 Only when the motor is the electromagnetic brake type.

memo
- When installing the motor on a moving part, use a flexible cable.
- When extending the wiring length by connecting an extension cable to the connection cable, keep the total cable length to 20 m (65.6 ft.) or less.

● **Extension cable set**

For motor/encoder

Model	Length [m (ft.)]
CC010VZFT	1 (3.3)
CC020VZFT	2 (6.6)
CC030VZFT	3 (9.8)
CC050VZFT	5 (16.4)
CC070VZFT	7 (23.0)
CC100VZFT	10 (32.8)
CC150VZFT	15 (49.2)

For motor/encoder/electromagnetic brake

Model	Length [m (ft.)]
CC010VZFBT	1 (3.3)
CC020VZFBT	2 (6.6)
CC030VZFBT	3 (9.8)
CC050VZFBT	5 (16.4)
CC070VZFBT	7 (23.0)
CC100VZFBT	10 (32.8)
CC150VZFBT	15 (49.2)

- **Flexible extension cable set**

For motor/encoder

Model	Length [m (ft.)]
CC010VZRT	1 (3.3)
CC020VZRT	2 (6.6)
CC030VZRT	3 (9.8)
CC050VZRT	5 (16.4)
CC070VZRT	7 (23.0)
CC100VZRT	10 (32.8)
CC150VZRT	15 (49.2)

For motor/encoder/electromagnetic brake

Model	Length [m (ft.)]
CC010VZRBT	1 (3.3)
CC020VZRBT	2 (6.6)
CC030VZRBT	3 (9.8)
CC050VZRBT	5 (16.4)
CC070VZRBT	7 (23.0)
CC100VZRBT	10 (32.8)
CC150VZRBT	15 (49.2)

8-2 Connection cables (For connector type)

■ Connection cable/Flexible connection cable

These cables are used when connecting a motor and a driver.

Connection cable

For motor/encoder/electromagnetic brake

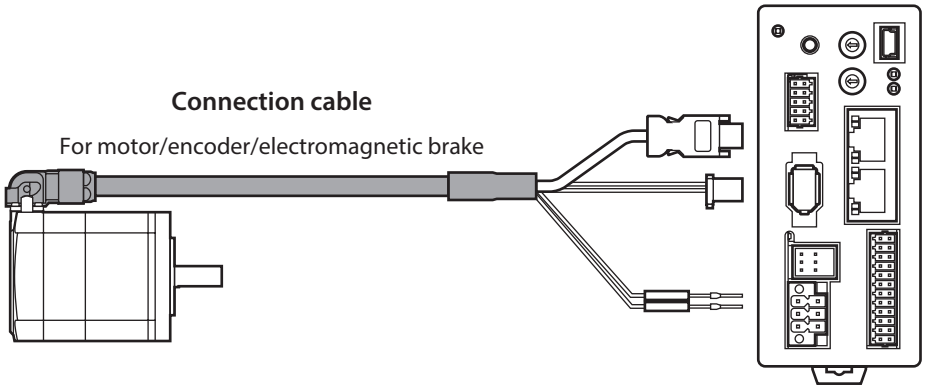

The model name of the connection cable varies depending on the outlet direction from the motor. Refer to the figures.

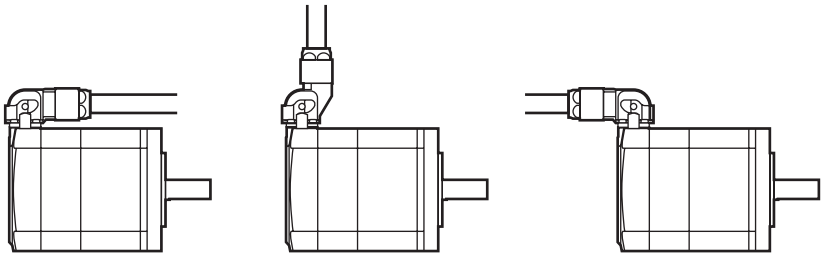

Cable outlet direction
Output shaft direction

Cable outlet direction
Vertical direction

Cable outlet direction
Opposite to output shaft direction

memo When installing the motor on a moving part, use a flexible cable.

- **Connection cable**

For motor/encoder

Length [m (ft.)]	Cable outlet direction		
	Output shaft direction	Vertical direction	Opposite to output shaft direction
0.5 (1.6)	**CCM005Z1CFF**	**CCM005Z1CVF**	**CCM005Z1CBF**
1 (3.3)	**CCM010Z1CFF**	**CCM010Z1CVF**	**CCM010Z1CBF**
2 (6.6)	**CCM020Z1CFF**	**CCM020Z1CVF**	**CCM020Z1CBF**
3 (9.8)	**CCM030Z1CFF**	**CCM030Z1CVF**	**CCM030Z1CBF**
5 (16.4)	**CCM050Z1CFF**	**CCM050Z1CVF**	**CCM050Z1CBF**
7 (23.0)	**CCM070Z1CFF**	**CCM070Z1CVF**	**CCM070Z1CBF**
10 (32.8)	**CCM100Z1CFF**	**CCM100Z1CVF**	**CCM100Z1CBF**

For motor/encoder/electromagnetic brake

Length [m (ft.)]	Cable outlet direction		
	Output shaft direction	Vertical direction	Opposite to output shaft direction
0.5 (1.6)	**CCM005Z1DFF**	**CCM005Z1DVF**	**CCM005Z1DBF**
1 (3.3)	**CCM010Z1DFF**	**CCM010Z1DVF**	**CCM010Z1DBF**
2 (6.6)	**CCM020Z1DFF**	**CCM020Z1DVF**	**CCM020Z1DBF**
3 (9.8)	**CCM030Z1DFF**	**CCM030Z1DVF**	**CCM030Z1DBF**
5 (16.4)	**CCM050Z1DFF**	**CCM050Z1DVF**	**CCM050Z1DBF**
7 (23.0)	**CCM070Z1DFF**	**CCM070Z1DVF**	**CCM070Z1DBF**
10 (32.8)	**CCM100Z1DFF**	**CCM100Z1DVF**	**CCM100Z1DBF**

- **Flexible connection cable**

For motor/encoder

Length [m (ft.)]	Cable outlet direction		
	Output shaft direction	Vertical direction	Opposite to output shaft direction
0.5 (1.6)	**CCM005Z1CFR**	**CCM005Z1CVR**	**CCM005Z1CBR**
1 (3.3)	**CCM010Z1CFR**	**CCM010Z1CVR**	**CCM010Z1CBR**
2 (6.6)	**CCM020Z1CFR**	**CCM020Z1CVR**	**CCM020Z1CBR**
3 (9.8)	**CCM030Z1CFR**	**CCM030Z1CVR**	**CCM030Z1CBR**
5 (16.4)	**CCM050Z1CFR**	**CCM050Z1CVR**	**CCM050Z1CBR**
7 (23.0)	**CCM070Z1CFR**	**CCM070Z1CVR**	**CCM070Z1CBR**
10 (32.8)	**CCM100Z1CFR**	**CCM100Z1CVR**	**CCM100Z1CBR**

For motor/encoder/electromagnetic brake

Length [m (ft.)]	Cable outlet direction		
	Output shaft direction	Vertical direction	Opposite to output shaft direction
0.5 (1.6)	**CCM005Z1DFR**	**CCM005Z1DVR**	**CCM005Z1DBR**
1 (3.3)	**CCM010Z1DFR**	**CCM010Z1DVR**	**CCM010Z1DBR**
2 (6.6)	**CCM020Z1DFR**	**CCM020Z1DVR**	**CCM020Z1DBR**
3 (9.8)	**CCM030Z1DFR**	**CCM030Z1DVR**	**CCM030Z1DBR**
5 (16.4)	**CCM050Z1DFR**	**CCM050Z1DVR**	**CCM050Z1DBR**
7 (23.0)	**CCM070Z1DFR**	**CCM070Z1DVR**	**CCM070Z1DBR**
10 (32.8)	**CCM100Z1DFR**	**CCM100Z1DVR**	**CCM100Z1DBR**

8-3 I/O signal cable

This cable is a shielded cable for the driver control I/O that has good noise immunity. The ground wire useful to grounding is extracted from both ends of the cable.
Select the cable suitable for the number of I/O signals connected.

Model list

Cable length [m (ft.)]	Number of lead wires			
	6 pcs.	10 pcs.	12 pcs.	16 pcs.
0.5 (1.6)	**CC06D005B-1**	**CC10D005B-1**	**CC12D005B-1**	**CC16D005B-1**
1 (3.3)	**CC06D010B-1**	**CC10D010B-1**	**CC12D010B-1**	**CC16D010B-1**
1.5 (4.9)	**CC06D015B-1**	**CC10D015B-1**	**CC12D015B-1**	**CC16D015B-1**
2 (6.6)	**CC06D020B-1**	**CC10D020B-1**	**CC12D020B-1**	**CC16D020B-1**

9 Accessories

9-1 Pulse signal converter for noise immunity

This product converts a pulse signal, which is output from the open collector output, to a pulse signal for good noise immunity by outputting the pulse signal again from the differential output.

Model: **VCS06**

9-2 Relay contact protection circuit/module

- **CR circuit for surge suppression**

  This product is effective to suppress the surge which occurs in a relay contact part. Use it to protect the contacts of the relay or switch.

  Model: **EPCR1201-2**

- **CR circuit module**

  This product is effective to suppress the surge which occurs in a relay contact part. Use it to protect the contacts of the relay or switch.
  Four pieces of CR circuit for surge suppression are mounted on the compact circuit, and this product can be installed to the DIN rail. This product can make the wiring easily and securely since it also supports terminal block connection.

  Model: **VCS02**

4 Implicit communication

This part explains how to control via Implicit communication.

◆**Table of contents**

1 Flow of setting of Implicit communication 104

2 Guidance 105

3 Communications specifications 109

4 Implicit message 110

4-1 Implicit message format 110

4-2 Input data 111

4-3 Output data 114

4-4 Processing order of Implicit communication 118

4-5 Data writing 119

4-6 Data reading 120

5 Example of execution for operation 122

5-1 Positioning operation 122

5-2 Continuous operation 123

6 Direct data operation 124

6-1 Overview of direct data operation 124

6-2 OUTPUT data and parameters required for direct data operation 125

6-3 Operation example 128

1 Flow of setting of Implicit communication

The contents of [ ] are explained in this manual.

Refer to the OPERATING MANUAL **AZ** Series Function Edition for the contents of [ ].

📖 is the title name described in the reference destination.

memo The title number described in the reference destination may be changed. Use the title name when checking the reference destination.

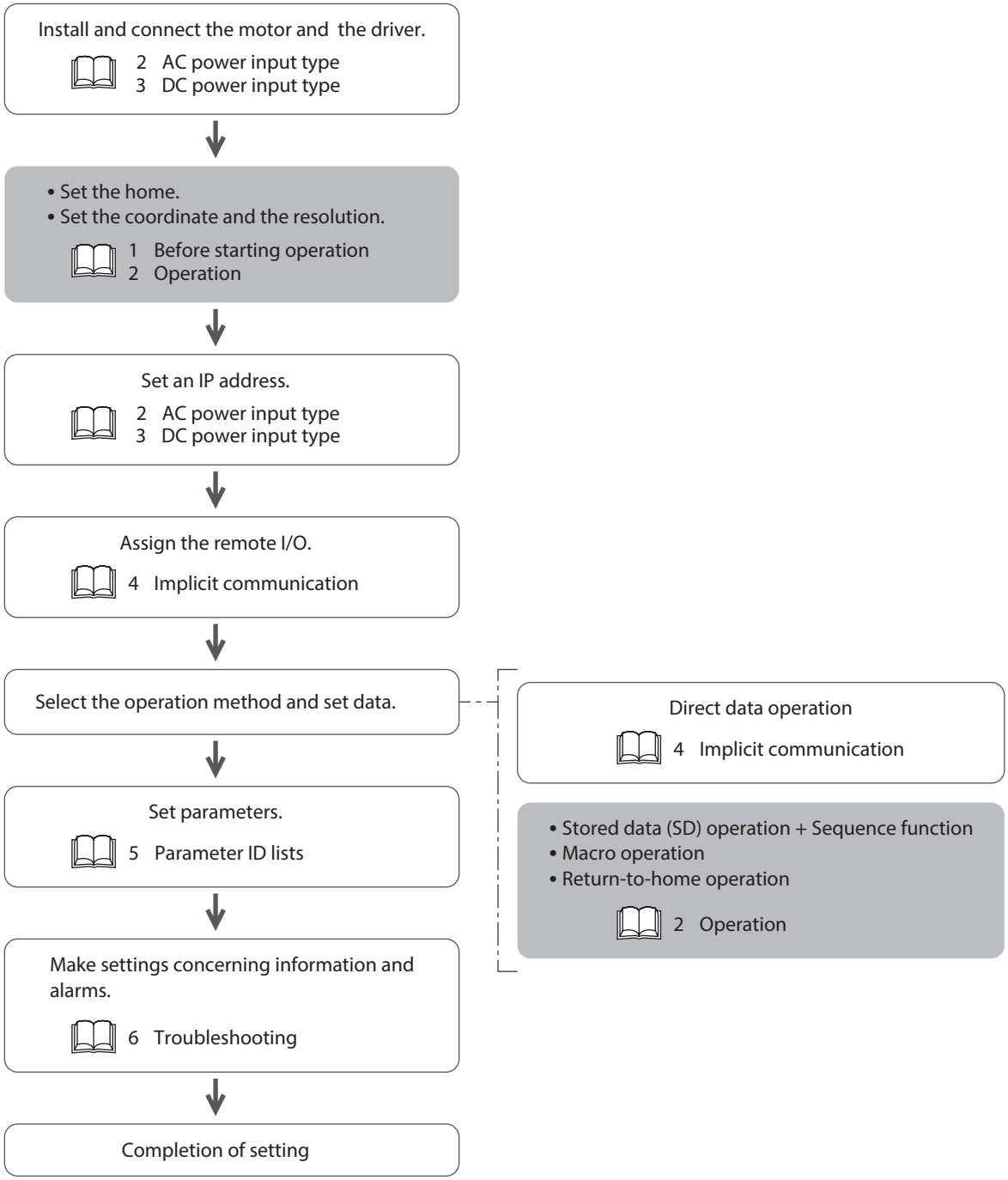

2 Guidance

If you are new to this product, read this chapter to understand the operating methods along with the operation flow. This is an example how to set the operation data and start the motor using the scanner.

STEP1	Installation and connection
↓	
STEP2	Before starting operation
↓	
STEP3	Setting of IP address
↓	
STEP4	Starting of motor

- **Operating conditions**

This operation is performed under the following conditions.

- Number of drivers connected: one unit
- IP address: 192.168.1.2

Note

- Before operating the motor, check the condition of the surrounding area to ensure safety.
- Before starting based on the guidance, import the EDS file to the configuration tool of the scanner and register the system configuration in advance. For details, contact your nearest Oriental Motor sales office.

STEP 1	Check the installation and connection.

■ AC power input driver

The figure shows models for single-phase 200 to 240 VAC input.

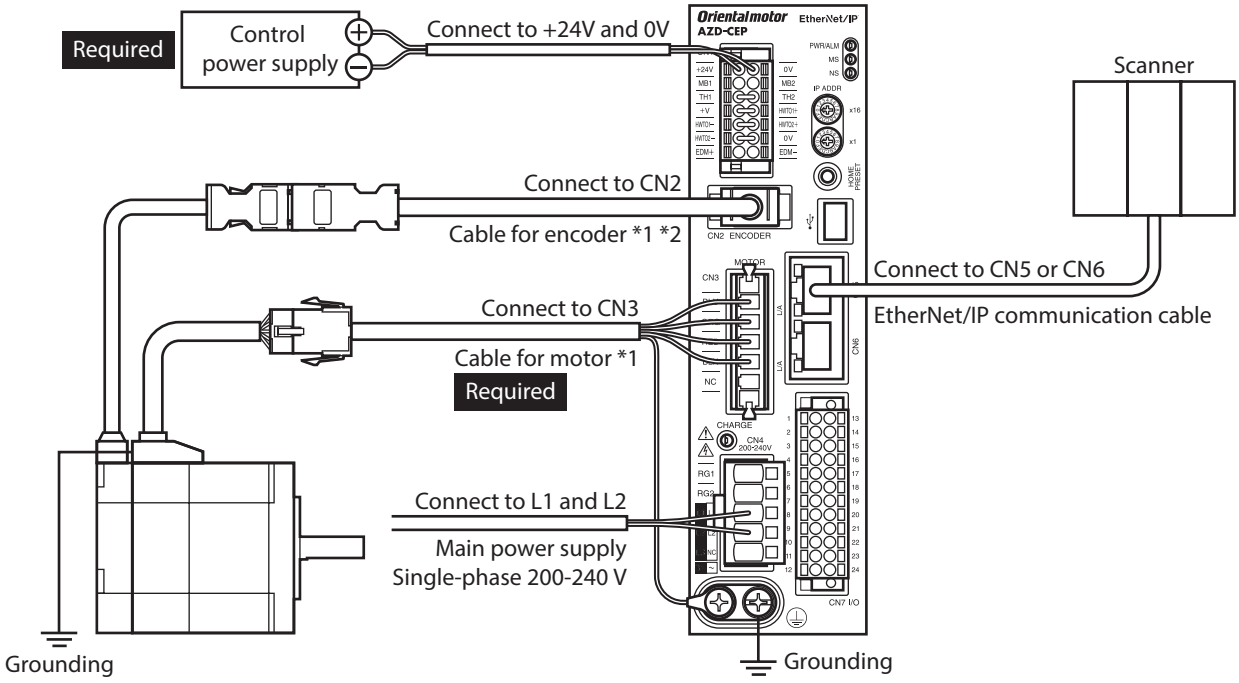

*1 These cables are provided as our products. Purchase it separately.
*2 Use the cable for encoder when the length of the encoder cable of motor is not enough.

■ DC power input driver

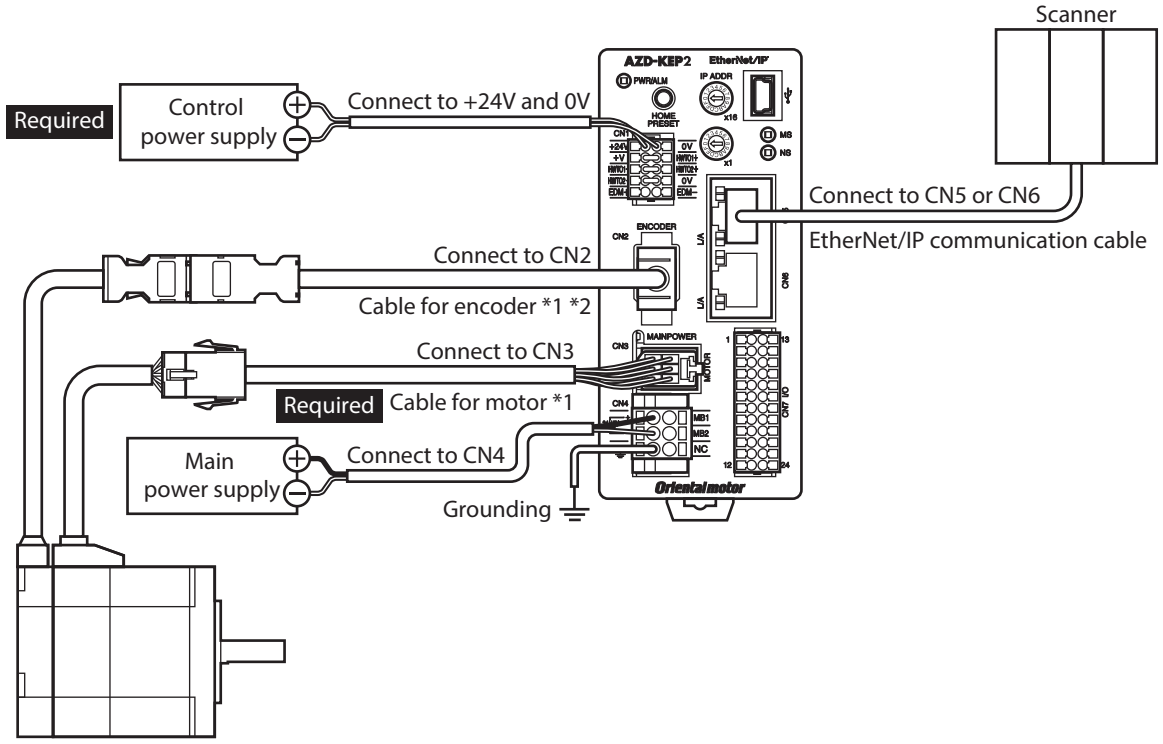

*1 These cables are provided as our products. Purchase it separately.
*2 Use the cable for encoder when the length of the encoder cable of motor is not enough.

STEP 2 Make preparations for operation.

Refer to "Before starting operation" in the OPERATING MANUAL **AZ** Series Function Edition.

STEP 3 Set an IP address.

Set an IP address using the IP address setting switches (IP ADDR ×16, ×1) of the driver.

1. Set the IP address setting switches as shown below.

   Settings: ×16: 0, ×1: 2 (192.168.1.2)

■ AC power input driver

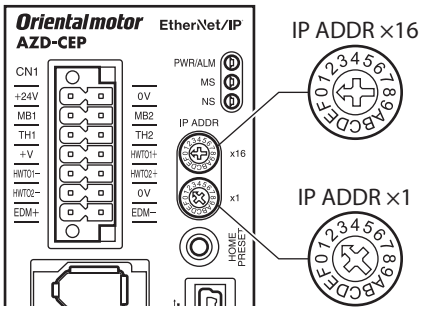

■ DC power input driver

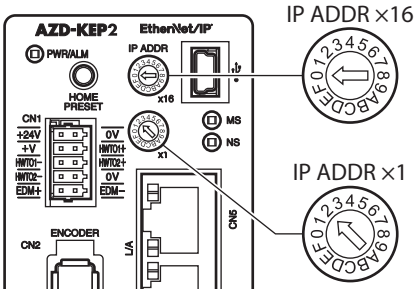

2. Turn on the control power supply again.

Note After setting the switches, turn off the control power supply and turn on again. The setting is enabled when the control power supply is turned on again.

STEP 4 The scanner starts the motor.

As an example, this section explains how to perform the following positioning operation.

- **Setting example**
  - Operation data number: 1
  - Position: 5,000 steps
  - Other settings: Initial values
- **Operation processing flow**

Descriptions are given using the scanner as the subject.

1. Set the following operation data to turn the WR-REQ ON.
   The operation data is set in the driver. When the setting is complete, the WR-END is turned ON.

Byte	Description	Setting value	Note
34, 35	Write parameter ID	3105	Parameter ID of "Position" of operation data No.1
36 to 39	Write data	5,000	Position: 5,000 steps

2. Turn the WR-REQ OFF.
   The WR-END is returned to OFF.
3. Check the READY has been turned ON.
4. Select the operation data No.1 to turn the START ON.
   Positioning operation is started.
5. Check the READY has been turned OFF, and turn the START OFF.

STEP 5	Were you able to operate?

How did it go? Were you able to operate the motor properly? If the motor does not operate, check the following points.

- Is the PWR/ALM LED blinking in red?
  An alarm is being generated. Refer to p.167 for details.
- Are the power supply, the motor and the EtherNet/IP communication cable connected securely?
- Is the IP address set correctly?
- Is the NS LED lit in red or blinking in red?
  A communication error is being detected. Refer to p.166 for details.

3 Communications specifications

Communications standards		EtherNet/IP (conforms to CT16)
Vendor ID		187: Oriental Motor Company
Device type		43: Generic Device
Transmission rate		10/100 Mbps (autonegotiation)
Communication mode		Full duplex/Half duplex (autonegotiation)
Cable specifications		Shielded twisted pair (STP) cable straight-through/crossover cable, category 5e or higher
Number of occupied bytes	Output (scanner → driver)	40 bytes
	Input (driver → scanner)	56 bytes
Implicit communication	Number of connections	2
	Connection type	Exclusive Owner, Input Only
	Communication cycle (RPI)	1 to 3,200 ms
	Connection type (scanner → driver)	Point–to–Point
	Connection type (driver → scanner)	Point–to–Point, Multicast
	Data trigger	Cyclic
IP address setting method		IP address setting switches, parameters, DHCP
Network topology		Star, Linear, Ring (Device Level Ring)

4 Implicit message

4-1 Implicit message format

This section shows transfer contents of Implicit message. The order of data is in little-endian format.
Contents of Implicit message is fixed and cannot be changed.

Byte	Input (driver → scanner)	Output (scanner → driver)
0, 1	Remote I/O (R-OUT)	Remote I/O (R-IN)
2, 3	Operation data number selection_R	Operation data number selection
4, 5	Fixed I/O (OUT)	Fixed I/O (IN)
6, 7	Present alarm	Direct data operation operation type
8, 9	Feedback position (lower)	Direct data operation position (lower)
10, 11	Feedback position (upper)	Direct data operation position (upper)
12, 13	Feedback speed [Hz] (lower)	Direct data operation operating speed (lower)
14, 15	Feedback speed [Hz] (upper)	Direct data operation operating speed (upper)
16, 17	Command position (lower)	Direct data operation starting/changing rate (lower)
18, 19	Command position (upper)	Direct data operation starting/changing rate (upper)
20, 21	Torque monitor	Direct data operation stopping deceleration (lower)
22, 23	CST operating current	Direct data operation stopping deceleration (upper)
24, 25	Information (lower)	Direct data operation operating current
26, 27	Information (upper)	Direct data operation forwarding destination
28, 29	Reserved	Reserved
30, 31	Read parameter ID_R	Read parameter ID
32, 33	Read/write status	Write request
34, 35	Write parameter ID_R	Write parameter ID
36, 37	Read data (lower)	Write data (lower)
38, 39	Read data (upper)	Write data (upper)
40, 41	Assignable monitor 0 (lower)	–
42, 43	Assignable monitor 0 (upper)	–
44, 45	Assignable monitor 1 (lower)	–
46, 47	Assignable monitor 1 (upper)	–
48, 49	Assignable monitor 2 (lower)	–
50, 51	Assignable monitor 2 (upper)	–
52, 53	Assignable monitor 3 (lower)	–
54, 55	Assignable monitor 3 (upper)	–

Note For Implicit message, all data in the message format is periodically exchanged between the driver and the scanner. Therefore, check all data when setting it. If only some data is set, the data that is not set will be undefined, which may cause the driver to malfunction.

4-2 Input data

Data transferred from the driver to the scanner is called Input data.

■ Input data format

Contents of the Input data is as follows. The order of data is in little-endian format.

Assembly Instance	Attribute	Byte	Size (byte)	Description
100	3	0, 1	2	Remote I/O (R-OUT)
		2, 3	2	Operation data number selection_R
		4, 5	2	Fixed I/O (OUT)
		6, 7	2	Present alarm
		8 to 11	4	Feedback position
		12 to 15	4	Feedback speed (Hz)
		16 to 19	4	Command position
		20, 21	2	Torque monitor
		22, 23	2	CST operating current
		24 to 27	4	Information
		28, 29	2	Reserved
		30, 31	2	Read parameter ID_R
		32, 33	2	Read/write status
		34, 35	2	Write parameter ID_R
		36 to 39	4	Read data
		40 to 43	4	Assignable monitor 0
		44 to 47	4	Assignable monitor 1
		48 to 51	4	Assignable monitor 2
		52 to 55	4	Assignable monitor 3

■ Details of Input data

● Remote I/O (R-OUT)

This is the I/O accessed via EtherNet/IP.
The assignments of signals can be changed with the "R-OUT output function" parameter.

Bit	Name	Description	Initial assignment
0	R-OUT0	A response to a signal assigned with the "R-OUT output function" parameter is output.	64: M0_R
1	R-OUT1		65: M1_R
2	R-OUT2		66: M2_R
3	R-OUT3		32: START_R
4	R-OUT4		144: HOME-END
5	R-OUT5		132: READY
6	R-OUT6		135: INFO
7	R-OUT7		129: ALM-A
8	R-OUT8		136: SYS-BSY
9	R-OUT9		160: AREA0
10	R-OUT10		161: AREA1
11	R-OUT11		162: AREA2
12	R-OUT12		157: TIM
13	R-OUT13		134: MOVE
14	R-OUT14		138: IN-POS
15	R-OUT15		140: TLC

- **Operation data number selection_R**

Bit	Name	Description
0	M0_R	A response to a input signal is output.
1	M1_R	
2	M2_R	
3	M3_R	
4	M4_R	
5	M5_R	
6	M6_R	
7	M7_R	
8 to 15	Reserved	0 is returned.

- **Fixed I/O (OUT)**

This is the I/O accessed via EtherNet/IP.
Assignments of signals cannot be changed.

Bit	Name	Description
0	SEQ-BSY	This is output when stored data operation is being performed.
1	MOVE	This is output when the motor operates.
2	IN-POS	This is output when positioning operation is complete.
3	START_R	A response to a input signal is output.
4	HOME-END	This is output when high-speed return-to-home operation or return-to-home operation is complete, or position preset is executed.
5	READY	This is output when the driver is ready to operate.
6	DCMD-RDY	This is output when the driver is ready to start direct data operation.
7	ALM-A	The alarm status of the driver is output. (Normally open)
8	TRIG_R	A response to a input signal is output.
9	TRIG-MODE_R	
10	SET-ERR	This is output when an error occurs in any of the settings of operation type, position, operating speed, starting/changing speed rate, stopping deceleration, operating current, and forwarding destination for direct data operation.
11	EXE-ERR	This is output when direct data operation is failed to execute.
12	DCMD-FULL	This is output when data is being written to the buffer area of direct data operation.
13	STOP_R	A response to a input signal is output.
14	ETO-MON	This is output after the HWTO1 input or the HWTO2 input is turned OFF until the motor is excited.
15	TLC	This is output when the output torque reaches the upper limit value.

- **Present alarm**

Bit	Name	Description
0 to 15	Present alarm	Indicates the alarm code presently being generated.

- **Feedback position**

Bit	Name	Description
0 to 31	Feedback position	Indicates the present feedback position. (step) When the wrap function is enabled, the value on the wrap coordinates is indicated.

- **Feedback speed (Hz)**

Bit	Name	Description
0 to 31	Feedback speed (Hz)	Indicates the present feedback speed. (Hz)

- **Command position**

Bit	Name	Description
0 to 31	Command position	Indicates the present command position. When the wrap function is enabled, the value on the wrap coordinates is indicated. (step)

- **Torque monitor**

Bit	Name	Description
0 to 15	Torque monitor	Indicates the torque presently generated as a percentage of the maximum holding torque. (1=0.1 %)

- **CST operating current**

Bit	Name	Description
0 to 15	CST operating current	Indicates the operating current of the α control (CST) mode. (1=0.1 %)

- **Information**

Bit	Name	Description
0 to 31	Information	Indicates the information code presently being generated.

- **Read parameter ID_R**

Bit	Name	Description
0 to 15	Read parameter ID_R	Indicates the response of the read parameter ID.

- **Read/write status**

Bit	Name	Description
0 to 6	Reserved	0 is returned.
7	RD-ERR	This is output when an error occurred in reading. If reading is performed properly, the RD-ERR is turned OFF.
8	WR-END	The response to the WR-REQ is output. The WR-END is also turned ON while the WR-REQ is ON. OFF: Write request waiting ON: Write completed
9	SYS-BSY	This is output when the driver is in internal processing state.
10	Reserved	0 is returned.
11	WR-SET-ERR	This is output when the write parameter ID or write data is out of the setting range.
12	WR-IF-ERR	This is output when writing cannot be performed due to user I/F communication in progress.
13	WR-NV-ERR	This is output when writing cannot be performed due to non-volatile memory processing in progress.
14	WR-EXE-ERR	This is output when a command cannot be executed.
15	WR-ERR	This is output when an error occurred in writing. If the WR-REQ is turned OFF or writing is performed properly, the WR-ERR is turned OFF.

- **Write parameter ID_R**

Bit	Name	Description
0 to 15	Write parameter ID_R	Indicates the response of the write parameter ID.

- **Read data**

Bit	Name	Description
0 to 31	Read data	Indicates the value of the parameter shown in the parameter ID_R.

- **Assignable monitor**

Bit	Name	Description
0 to 31	Assignable monitor n*	Indicates the value of the parameter set in the "Assignable monitor address n" parameter.

* n: 0 to 3

4-3 Output data

The Output data is data to transfer from the scanner to the driver.

■ Output data format

Descriptions of the Output data are as follows. The order of data is in little-endian format.

Assembly Instance	Attribute	Byte	Size (byte)	Description
101	3	0, 1	2	Remote I/O (R-IN)
		2, 3	2	Operation data number selection
		4, 5	2	Fixed I/O (IN)
		6, 7	2	Direct data operation operation type
		8 to 11	4	Direct data operation position
		12 to 15	4	Direct data operation operating speed
		16 to 19	4	Direct data operation starting/changing rate
		20 to 23	4	Direct data operation stopping deceleration
		24, 25	2	Direct data operation operating current
		26, 27	2	Direct data operation forwarding destination
		28, 29	2	Reserved
		30, 31	2	Read parameter ID
		32, 33	2	Write request
		34, 35	2	Write parameter ID
		36 to 39	4	Write data

■ Details of Output data

● Remote I/O (R-IN)

This is the I/O accessed via EtherNet/IP.
The assignments of signals can be changed using the "R-IN input function" parameters.

Bit	Name	Description	Initial assignment
0	R-IN0	These are used to execute a signal assigned with the "R-IN input function" parameter.	0: Not used
1	R-IN1		
2	R-IN2		
3	R-IN3		
4	R-IN4		
5	R-IN5		
6	R-IN6		
7	R-IN7		
8	R-IN8		
9	R-IN9		
10	R-IN10		
11	R-IN11		
12	R-IN12		
13	R-IN13		
14	R-IN14		
15	R-IN15		

● Operation data number selection

Bit	Name	Description	Initial value
0	M0	The operation data number is selected using these eight bits.	0
1	M1		
2	M2		
3	M3		
4	M4		
5	M5		
6	M6		
7	M7		
8 to 15	Reserved	A value is disregarded.	0

- **Fixed I/O (IN)**

This is the I/O accessed via EtherNet/IP.
Assignments of signals cannot be changed.

Bit	Name	Description	Initial value
0	FW-JOG	This is used to execute JOG operation in the forward direction.	0
1	RV-JOG	This is used to execute JOG operation in the reverse direction.	
2	Reserved	A value is disregarded.	
3	START	This is used to execute stored data operation.	
4	ZHOME	This is used to execute high-speed return-to-home operation.	
5	STOP	This is used to stop the motor.	
6	FREE	This is used to shut off the motor current to remove the motor excitation. In the case of an electromagnetic brake motor, the electromagnetic brake is released.	
7	ALM-RST	This is used to reset the alarm being generated presently.	
8	TRIG	This is used to execute direct data operation.	
9	TRIG-MODE	This is used to set the judgment level for the TRIG. 0: Start at ON edge 1: Start at ON level	
10	ETO-CLR	The motor is excited after the power removal status is released.	
11	Reserved	A value is disregarded.	
12	FW-JOG-P	This is used to execute inching operation in the forward direction.	
13	RV-JOG-P	This is used to execute inching operation in the reverse direction.	
14	FW-POS	This is used to execute continuous operation in the forward direction.	
15	RV-POS	This is used to execute continuous operation in the reverse direction.	

- **Direct data operation operation type**

Bit	Name	Description	Initial value
0 to 15	Direct data operation operation type	This is used to set the operation type for direct data operation. **[Setting range]** 0: No setting 1: Absolute positioning 2: Incremental positioning (based on command position) 3: Incremental positioning (based on feedback position) 7: Continuous operation (position control) 8: Wrap absolute positioning 9: Wrap proximity positioning 10: Wrap forward direction absolute positioning 11: Wrap reverse direction absolute positioning 12: Wrap absolute push-motion 13: Wrap proximity push-motion 14: Wrap forward direction push-motion 15: Wrap reverse direction push-motion 16: Continuous operation (speed control) 17: Continuous operation (push-motion) 18: Continuous operation (torque control) 20: Absolute positioning push-motion 21: Incremental positioning push-motion (based on command position) 22: Incremental positioning push-motion (based on feedback position)	2

- **Direct data operation position**

Bit	Name	Description	Initial value
0 to 31	Direct data operation position	This is used to set the target position for direct data operation. **[Setting range]** −2,147,483,648 to 2,147,483,647 steps	0

- **Direct data operation operating speed**

Bit	Name	Description	Initial value
0 to 31	Direct data operation operating speed	This is used to set the operating speed for direct data operation. **[Setting range]** −4,000,000 to 4,000,000 Hz	1,000

- **Direct data operation starting/changing rate**

Bit	Name	Description	Initial value
0 to 31	Direct data operation starting/changing rate	This is used to set the acceleration/deceleration rate or the acceleration/deceleration time when staring or changing the speed for direct data operation. **[Setting range]** 1 to 1,000,000,000 (1=0.001 kHz/s, 1=0.001s, or 1=0.001 ms/kHz)	1,000,000

- **Direct data operation stopping deceleration**

Bit	Name	Description	Initial value
0 to 31	Direct data operation stopping deceleration	This is used to set the deceleration rate or the deceleration time when stopping for direct data operation. **[Setting range]** 1 to 1,000,000,000 (1=0.001 kHz/s, 1=0.001s, or 1=0.001ms/kHz)	1,000,000

- **Direct data operation operating current**

Bit	Name	Description	Initial value
0 to 15	Direct data operation operating current	This is used to set the operating current for direct data operation. **[Setting range]** 0 to 1,000 (1=0.1 %)	1,000

- **Direct data operation forwarding destination**

Bit	Name	Description	Initial value
0 to 15	Direct data operation forwarding destination	This is used to select the stored area when the next direct data is transferred during direct data operation. **[Setting range]** 0: Execution memory 1: Buffer memory	0

- **Read parameter ID**

Bit	Name	Description	Initial value
0 to 15	Read parameter ID	This is used to set the parameter ID to be read from.	0

- **Write request**

Bit	Name	Description	Initial value
0	WR-REQ	This is used to set the write request. **[Setting range]** 0: Disable 1: Write request (ON edge)	0
1 to 15	Reserved	A value is disregarded.	0

- **Write parameter ID**

Bit	Name	Description	Initial value
0 to 15	Write parameter ID	This is used to set the parameter ID to be written to.	0

- **Write data**

Bit	Name	Description	Initial value
0 to 31	Write data	This is used to set a value to be written to the parameter specified by the write parameter ID.	0

4-4 Processing order of Implicit communication

The processing order of Implicit communication is shown.

Data writing

↓

Setting of operation command

↓

Data reading

memo

- If multiple operation commands are set in the Implicit message format, the operation command of direct data operation is prioritized.
- If the operation commands for remote I/O (R-IN) and fixed I/O (IN) are set at the same time, operations are as follows.
  · If the same operation command is set: The motor will start.
  · If different operation commands are set: The motor will not start, and information of operation start error will be generated.

4-5 Data writing

This section explains the flow that data is written from the scanner to the driver via Implicit communication.

■ Area of Implicit message format used

Input (transfer from driver to scanner)

Byte	Description
32, 33	Read/write status
34, 35	Write parameter ID_R

Output (transfer from scanner to driver)

Byte	Description
32, 33	Write request
34, 35	Write parameter ID
36 to 39	Write data

■ Flow that data is written to

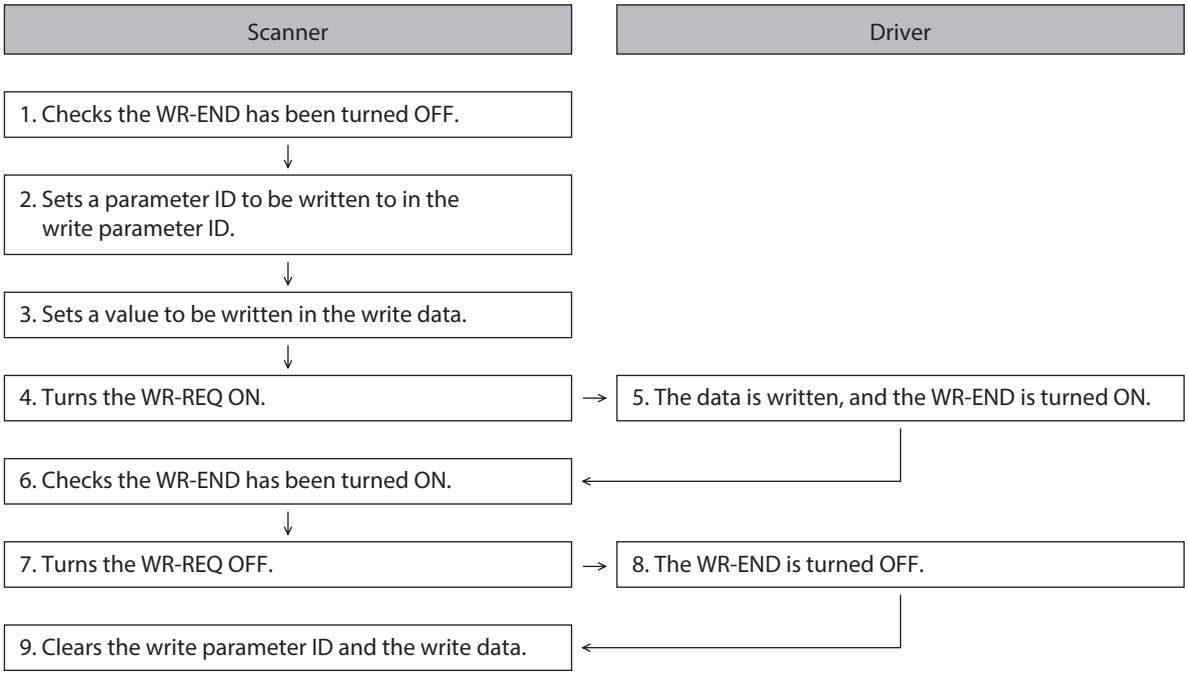

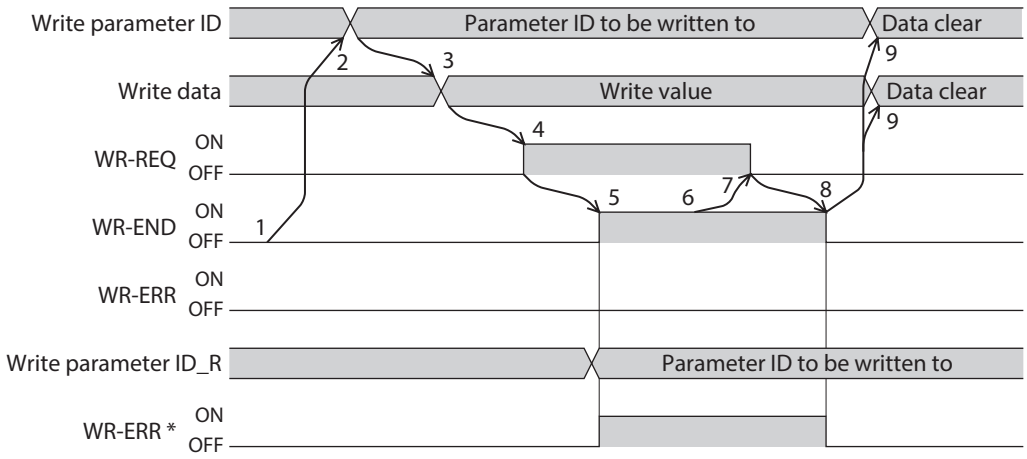

* If an error occurs while data is being written, the WR-END and WR-ERR are simultaneously turned ON.

4-6 Data reading

This section explains the flow that data is read from the driver to the scanner via Implicit communication.
There are the following two methods to read data.

- Use an area of "read data"
- Use an area of "assignable monitor"

■ When an area of read data is used

● Area of Implicit message format used

Input (transfer from driver to scanner)

Byte	Description
30, 31	Read parameter ID_R
32, 33	Read/write status
36 to 39	Read data

Output (transfer from scanner to driver)

Byte	Description
30, 31	Read parameter ID

● Flow that data is read from

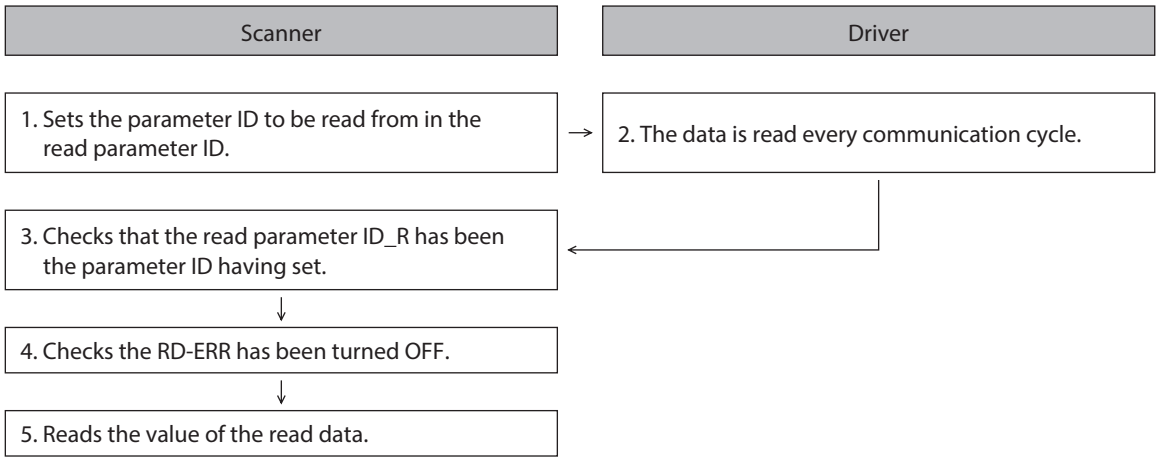

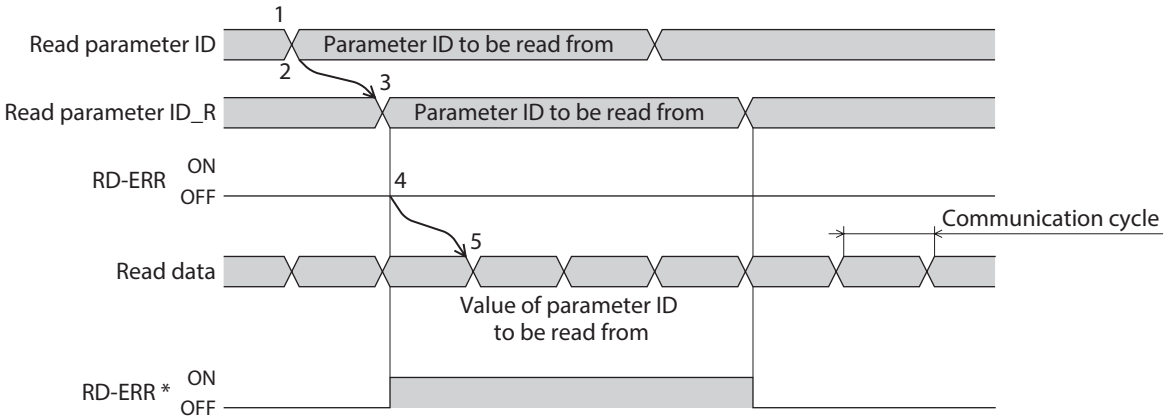

* If the parameter ID out of setting range is set to the read parameter ID, the RD-ERR is turned ON at the same time that the read parameter ID_R is updated.

■ When an area of assignable monitor is used

- **Area of Implicit message format used**

Input (transfer from driver to scanner)

Byte	Description
40 to 55	Assignable monitor 0 to assignable monitor 3

- **Flow that data is read from**

Scanner		Driver
Sets the "Assignable monitor address" parameter.	→	The value of the parameter set in the "Assignable monitor address" parameter is read every communication cycle.

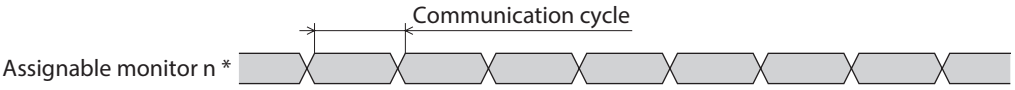

* n: 0 to 3

- **Related parameters**

Parameter ID		Name	Description	Setting range	Initial value
Dec	Hex				
25600	6400h	Assignable monitor address 0	Sets the parameter ID to show on the assignable monitor.	Set from items of "5 Parameter ID lists"	124: Driver temperature
25601	6401h	Assignable monitor address 1			125: Motor temperature
25602	6402h	Assignable monitor address 2			109: Cumulative load monitor
25603	6403h	Assignable monitor address 3			127: Tripmeter

5 Example of execution for operation

This chapter describes operations that operation data is set using the write data area.
The method to execute operation is common to fixed I/O and remote I/O.

Note Before operating the motor, check the condition of the surrounding area to ensure safety.

5-1 Positioning operation

As an example, this section explains how to perform the following positioning operation.

- **Setting example**
  - Operation data number: 1
  - Position: 5,000 steps
  - Other settings: Initial values

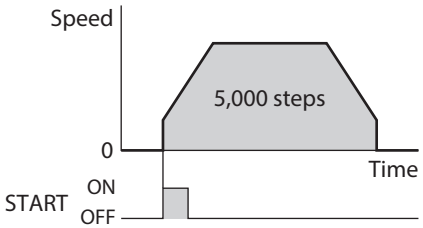

- **Operation processing flow**

Descriptions are given using the scanner as the subject.

1. Set the following operation data to turn the WR-REQ ON.
   The operation data is set in the driver. When the setting is complete, the WR-END is turned ON.

   • Output (scanner → driver)

Byte	Description	Setting value	Note
34, 35	Write parameter ID	3105	Parameter ID of "Position" of operation data No.1
36 to 39	Write data	5,000	Position: 5,000 steps

   • Input (driver → scanner)

Byte	Description	Response	Note
34, 35	Write parameter ID_R	3105	Parameter ID of "Position" of operation data No.1

2. Turn the WR-REQ OFF.
   The WR-END is returned to OFF.
3. Check the READY has been turned ON.
4. Select the operation data No.1 to turn the START ON.
   Positioning operation is started.
5. Check the READY has been turned OFF, and turn the START OFF.

5-2 Continuous operation

As an example, this section explains how to perform the following continuous operation.

● Setting example

- Operation data number: 0
- Rotation direction: Forward direction
- Other settings: Initial values

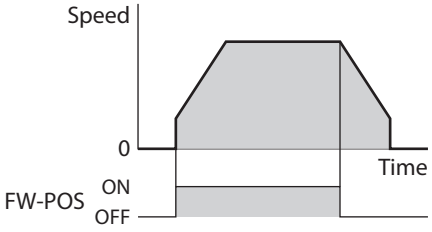

● Operation processing flow

Descriptions are given using the scanner as the subject.

1. Check the READY has been turned ON.
2. Set the following operation data to turn the FW-POS ON.
   Continuous operation is started.

   • Output (scanner → driver)

Byte	Description	Setting value	Note
2, 3	Operation data number selection	0	Selects the operation data No.0.

3. To stop continuous operation, turn the FW-POS OFF.
   The motor decelerates to a stop.

6 Direct data operation

6-1 Overview of direct data operation

Direct data operation is a mode that allows rewriting of data and start of operation to be executed at the same time. It is suitable to frequently change operation data such as the position (travel amount) and operating speed or to fine-tune the position.
There are the following seven types of triggers to start operation at the same time as rewriting of data.

- One of the following items: Operation type, position, operating speed, starting/changing speed rate, stopping deceleration, and operating current
- The above six items are collectively rewritten

The direct data operation is executed with the TRIG of fixed I/O (IN).
A condition to execute direct data operation can be selected from the following two types using the TRIG-MODE of fixed I/O (IN).

- Start at ON edge of TRIG: The motor will start according to the operation data being set when the TRIG is turned ON.
- Start at ON level of TRIG: The motor will start at the same time when the data of the trigger set in the "Direct data operation trigger setting" parameter is changed.

■ Application example 1 of direct data operation

The position (travel amount) or the operating speed should be adjusted each time a load is changed because the feed rate is different in each load.

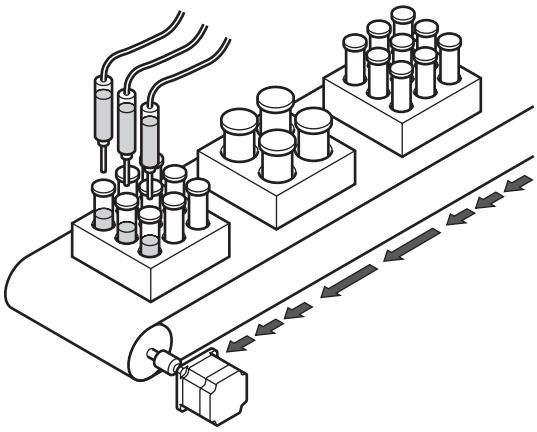

● Setting example

- Position (travel amount): Change as desired
- Operating speed: Change as desired
- TRIG-MODE: Start at ON edge of TRIG

● Operation processing flow

Descriptions are given using the scanner as the subject.

1. Write the position and the operating speed.
2. Turn the TRIG ON.

● Result

When the TRIG is turned ON, the changed value is updated immediately, and operation is performed with the new position and operating speed.

■ Application example 2 of direct data operation

The operating speed should be changed immediately with the touch screen because a large load is inspected at a lower speed.

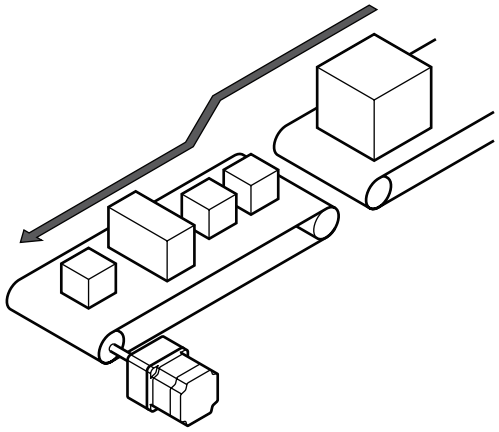

- **Setting example**
  - Operating speed: Change as desired
  - Trigger: Operating speed (setting value of trigger: –4)
  - TRIG-MODE: Start at ON level of TRIG
- **Operation processing flow**

  Descriptions are given using the scanner as the subject.

  1. Write "–4" to the "Direct data operation trigger setting" parameter.
  2. Write the data of the operating speed.
  3. Turn the TRIG ON.
  4. Change the operating speed.
- **Result**

  When the TRIG is turned ON, operation is started. If the operating speed is changed, the changed value is updated immediately, and the operation is performed at the new operating speed.

6-2 OUTPUT data and parameters required for direct data operation

Related OUTPUT data

Byte	Name	Description	Initial value
6, 7	Direct data operation operation type	This is used to set the operation type for direct data operation. **[Setting range]** 0: No setting 1: Absolute positioning 2: Incremental positioning (based on command position) 3: Incremental positioning (based on feedback position) 7: Continuous operation (position control) 8: Wrap absolute positioning 9: Wrap proximity positioning 10: Wrap forward direction absolute positioning 11: Wrap reverse direction absolute positioning 12: Wrap absolute push-motion 13: Wrap proximity push-motion 14: Wrap forward direction push-motion 15: Wrap reverse direction push-motion 16: Continuous operation (speed control) 17: Continuous operation (push-motion) 18: Continuous operation (torque control) 20: Absolute positioning push-motion 21: Incremental positioning push-motion (based on command position) 22: Incremental positioning push-motion (based on feedback position)	2
8 to 11	Direct data operation position	This is used to set the target position for direct data operation. **[Setting range]** –2,147,483,648 to 2,147,483,647 steps	0
12 to 15	Direct data operation operating speed	This is used to set the operating speed for direct data operation. **[Setting range]** –4,000,000 to 4,000,000 Hz	1,000

Byte	Name	Description	Initial value
16 to 19	Direct data operation starting/changing rate	This is used to set the acceleration/deceleration rate or the acceleration/deceleration time when staring or changing the speed for direct data operation. **[Setting range]** 1 to 1,000,000,000 (1=0.001 kHz/s, 1=0.001 s, or 1=0.001 ms/kHz)	1,000,000
20 to 23	Direct data operation stopping deceleration	This is used to set the deceleration rate or the deceleration time when stopping for direct data operation. **[Setting range]** 1 to 1,000,000,000 (1=0.001 kHz/s, 1=0.001 s, or 1=0.001 ms/kHz)	1,000,000
24, 25	Direct data operation operating current	This is used to set the operating current for direct data operation. **[Setting range]** 0 to 1,000 (1=0.1 %)	1,000
26, 27	Direct data operation forwarding destination	This is used to select the stored area when the next direct data is transferred during direct data operation. **[Setting range]** 0: Execution memory 1: Buffer memory	0

Related parameter

Parameter ID		Name	Description	Initial value
Dec	Hex			
24852	6114h	Direct data operation trigger setting	This is used to set the trigger to execute direct data operation. The trigger setting is enabled only when the TRIG-MODE is set to "1: Start at ON level." **[Setting range]** −6: Operation type −5: Position −4: Speed −3: Starting/changing rate −2: Stopping deceleration −1: Operating current 0: Disable 1: Apply all data	1

■ Trigger setting

This is a trigger to start operation at the same time as rewriting of data in direct data operation.
The trigger setting is enabled only when the TRIG-MODE is set to "1: Start at ON level."

- **When the trigger setting is "0"**

  Direct data operation is disabled.

- **When the trigger setting is "1"**

  When the TRIG is turned from OFF to ON, direct data operation is started. After that, if any of data is changed, the motor will be started. The motor will be started only when data is changed.

- **When the trigger setting is "−1 to −6"**

  When the TRIG is turned from OFF to ON, direct data operation is started. After that, only when the data corresponding to the trigger is changed, the motor will be started. Even if data other than the trigger is changed, the motor will not be started.

■ Data forwarding destination

During direct data operation, the stored area when the next direct data is transferred can be selected.

- **When the forwarding destination is set to "0: Execution memory"**

If the TRIG is turned from OFF to ON or the data corresponding to the trigger is changed, the data during operation can be rewritten to the next direct data.

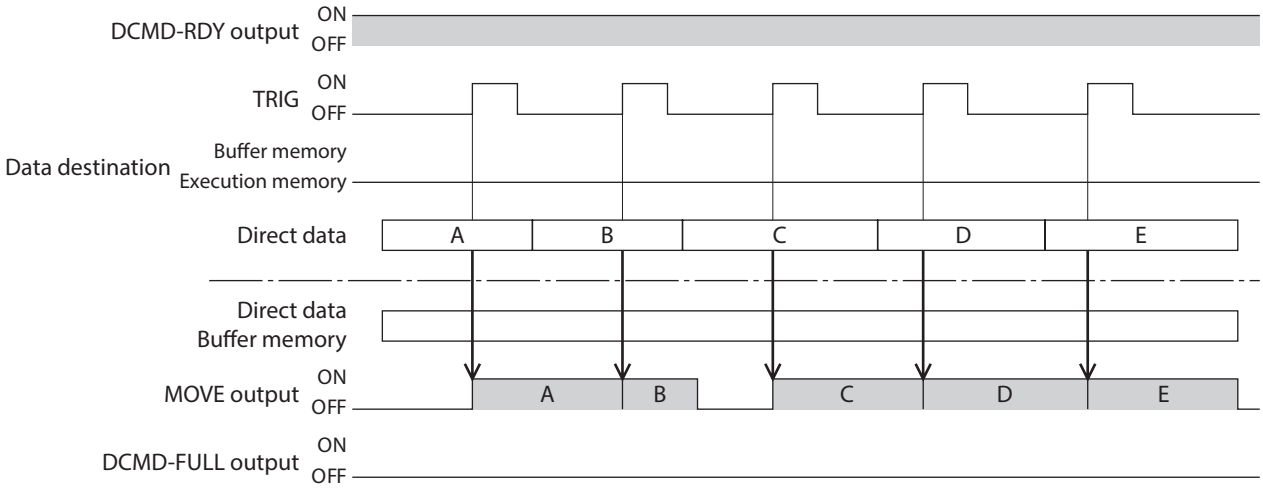

- **When the forwarding destination is set to "1: Buffer memory"**

If the TRIG is turned from OFF to ON or the data corresponding to the trigger is changed, the next direct data is saved in the buffer memory. When the data during operation is complete, operation of the buffer memory is automatically started. One direct data can be saved in the buffer memory.
If the next direct data is written to the buffer memory, the DCMD-FULL output is turned ON.
During stopping or continuous operation, if the "Buffer memory" is specified, the data is not saved in the buffer memory and rewritten to the next direct data immediately.

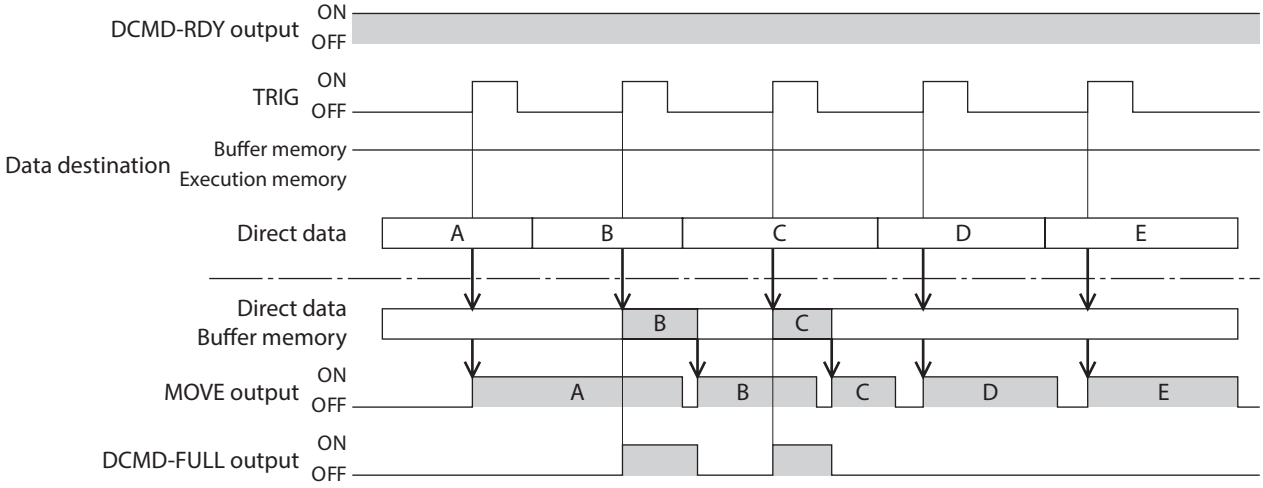

Note The direct data cannot be written to the buffer memory in a state where the DCMD-FULL output is ON.

6-3 Operation example

A condition to execute direct data operation can be selected from the ON edge or ON level of TRIG of fixed I/O (IN). A condition can be selected with the TRIG-MODE of fixed I/O (IN).

Note Before operating the motor, check the condition of the surrounding area to ensure safety.

■ When direct data operation is executed at ON edge of TRIG

As an example, this section explains how to perform the following direct data operation.

● Setting example

- Operation type: Incremental positioning (based on command position)
- Position: 5,000 steps
- Operating speed: 1,000 Hz
- Starting/changing speed rate: 1,000 kHz/s
- Stopping deceleration: 1,000 kHz/s
- Operating current: 100 %
- Forwarding destination: Execution memory

● Operation processing flow

Descriptions are given using the scanner as the subject.

1. Check the DCMD-RDY has been turned ON.
2. Set the following data.

• Output (scanner → driver)

Byte	Description	Setting value	Note
4, 5	TRIG-MODE [bit 9 of fixed I/O (IN)]	0	Start at ON edge
6, 7	Direct data operation operation type	2	Incremental positioning (based on command position)
8 to 11	Direct data operation position	5,000	5,000 steps
12 to 15	Direct data operation operating speed	1,000	1,000 Hz
16 to 19	Direct data operation starting/changing rate	1,000,000	1,000 kHz/s
20 to 23	Direct data operation stopping deceleration	1,000,000	1,000 kHz/s
24, 25	Direct data operation operating current	1,000	100.0 %
26, 27	Direct data operation forwarding destination	0	Execution memory

3. Turn the TRIG ON.
   Direct data operation is started.
4. Check the TRIG_R has been turned ON, and turn the TRIG OFF.

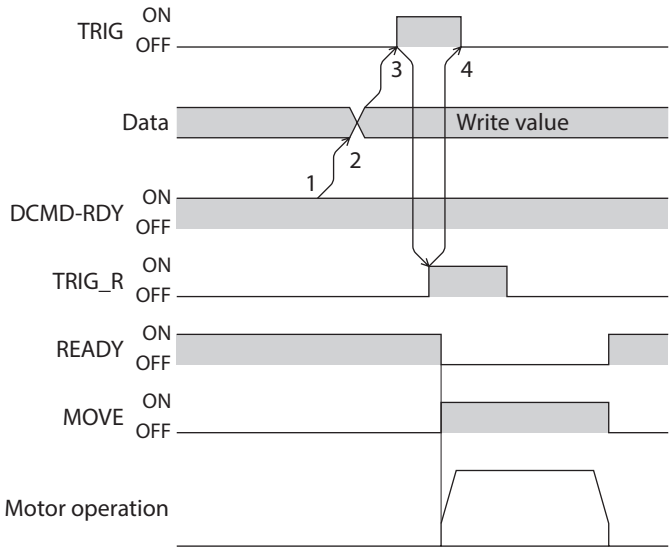

■ When direct data operation is executed at ON level of TRIG

This section explains how to execute the following direct data operation with setting the trigger to "position."
Set the trigger with the "Direct data operation trigger setting" parameter.

● Setting example

- Operation 1
  Position: 7,000 steps
- Operation 2
  Position: 3,000 steps
- Other settings

Description	Setting value
Operation type	Incremental positioning (based on command position)
Operating speed	1,000 Hz
Starting/changing speed rate	1,000 kHz/s

Description	Setting value
Stopping deceleration	1,000 kHz/s
Operating current	100 %
Forwarding destination	Execution memory

● Operation processing flow

Descriptions are given using the scanner as the subject.

1. Set the following parameters to turn the WR-REQ ON.
   The parameter information is set to the driver. When the setting is complete, the WR-END is turned ON.

   • Output (scanner → driver)

Byte	Description	Setting value	Note
34, 35	Write parameter ID	24852	Parameter ID of "Direct data operation trigger setting"
36 to 39	Write data	−5	Position

2. Turn the WR-REQ OFF.
   The WR-END is returned to OFF.
3. Check the DCMD-RDY has been turned ON.
4. Set the following data.

   • Output (scanner → driver)

Byte	Description	Setting value	Note
4, 5	TRIG-MODE [bit 9 of fixed I/O (IN)]	1	Start at ON level
6, 7	Direct data operation operation type	2	Incremental positioning (based on command position)
8 to 11	Direct data operation position	7,000	7,000 steps
12 to 15	Direct data operation operating speed	1,000	1,000 Hz
16 to 19	Direct data operation starting/changing rate	1,000,000	1,000 kHz/s
20 to 23	Direct data operation stopping deceleration	1,000,000	1,000 kHz/s
24, 25	Direct data operation operating current	1,000	100 %
26, 27	Direct data operation forwarding destination	0	Execution memory

5. Turn the TRIG ON.
   Direct data operation of the operation 1 is started.
6. Check the operation 1 is complete and then set the following data.
   Direct data operation of the operation 2 is started.

   • Output (scanner → driver)

Byte	Description	Setting value	Note
8 to 11	Direct data operation position	3,000	3,000 steps

memo

- To execute direct data operation of the operation 2, set a different value from the operation 1 in the "position" of the operation 2.
- If a value other than the "position" is changed, direct data operation of the operation 2 will not be executed.

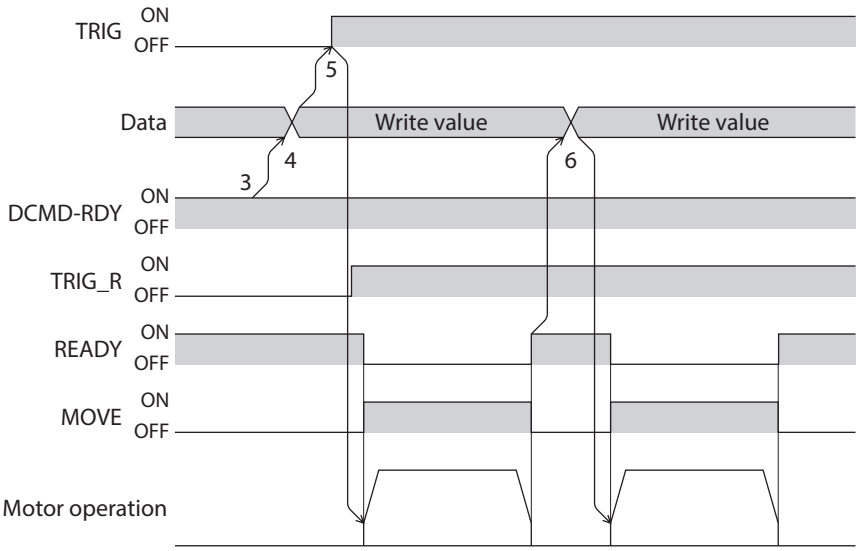

5 Parameter ID lists

This part describes the parameter ID lists to be set via EtherNet/IP.
Data and parameters described here can also be set using the MEXE02.

◆Table of contents

1 Timing for parameter to update.....132

2 Maintenance commands.....133

3 Monitor commands.....135

4 Operation data R/W commands 139

4-1 Base address of each operation data number.....139

4-2 Parameter ID.....141

4-3 Setting example.....142

5 Operation I/O event R/W commands 143

5-1 Base address of operation I/O event.....143

5-2 Parameter ID for operation I/O event R/W command.....143

6 Protect release commands 144

7 Extended operation data setting R/W command.....145

8 Parameter R/W commands 146

8-1 Driver action simulation setting parameter.....146

8-2 Basic setting parameters.....146

8-3 Position coordinate parameters.....147

8-4 Operation parameters.....147

8-5 Direct data operation parameters.....147

8-6 ABZO sensor setting parameters.....148

8-7 Mechanism settings parameters.....148

8-8 Initial coordinate generation & wrap coordinate parameters.....148

8-9 JOG/HOME/ZHOME operation information setting parameters.....149

8-10 Power removal function setting parameters.....150

8-11 Alarm setting parameters.....150

8-12 Information setting parameters.....151

8-13 I/O parameters.....152

8-14 Direct I/O setting parameters.....156

8-15 Remote I/O setting parameters.....157

8-16 Extended input setting parameters.....158

8-17 Differential output setting parameters.....159

8-18 Virtual input parameters.....159

8-19 User output setting parameters.....160

8-20 Driver mode setting parameters.....160

8-21 EtherNet/IP communication setting parameters.....160

9 I/O signals assignment list.....162

9-1 Input signals.....162

9-2 Output signals.....163

1 Timing for parameter to update

All data used by the driver is 32-bit wide.
Parameters are stored in the RAM or non-volatile memory. The parameters in the RAM are erased once the control power supply is shut off, but the parameters in the non-volatile memory are remained to store even if the control power supply is shut off.
When the control power supply of the driver is turned on, the parameters stored in the non-volatile memory will be sent to the RAM, and the recalculation and setup for the parameters will be executed in the RAM.

Parameters set via Implicit communication are stored in the RAM. To save the parameters stored in the RAM to the non-volatile memory, execute the "Write batch NV memory" of the maintenance command.
When a parameter is changed, the timing to update the new value varies depending on the parameter. For details about timing to update, check on "Notation rules."

memo

- Parameters set via Implicit communication are stored in the RAM. For parameters required for turning on the control power supply again, be sure to save them in the non-volatile memory before turning off the power.
- The non-volatile memory can be rewritten approximately 100,000 times.

■ Notation rules

● Timing to update

In this part, each update timing is represented in an alphabet.

Notation	Update timing	Description
A	Update immediately	Recalculation and setup are immediately executed when the parameter is written.
B	Update after operation stop	Recalculation and setup are executed when the operation is stopped.
C	Update after executing configuration	Recalculation and setup are executed after Configuration is executed or the control power supply is turned on again.
D	Update after turning on the control power supply again	Recalculation and setup are executed after the control power supply is turned on again.

● READ and WRITE

READ/WRITE may be represented as follows in this manual.

Notation	Description
R	READ
W	WRITE
R/W	READ/WRITE

2 Maintenance commands

Maintenance commands are used for resetting alarms, clearing latch information, batch processing of the non-volatile memory or the like are executed.
Refer to the OPERATING MANUAL **AZ** Series Function Edition for details about parameters. When checking the OPERATING MANUAL **AZ** Series Function Edition, use the parameter name instead of the parameter ID.

Note The maintenance commands include processing in which the memory is operated, such as batch processing of the non-volatile memory and P-PRESET. Be careful not to execute them unnecessarily in succession.

Parameter ID		Name	Setting range	Initial value
Dec	Hex			
192	00C0h	Alarm reset	–	–
194	00C2h	Clear alarm history		
197	00C5h	P-PRESET execution		
198	00C6h	Configuration		
199	00C7h	Batch data initialization (excluding communication parameters)		
200	00C8h	Read batch NV memory		
201	00C9h	Write batch NV memory		
202	00CAh	All data batch initialization (including communication parameters)		
203	00CBh	Read from backup		
204	00CCh	Write to backup		
205	00CDh	Clear latch information		
206	00CEh	Clear sequence history		
207	00CFh	Clear tripmeter		
208	00D0h	Execute ETO-CLR input		
209	00D1h	ZSG-PRESET		
210	00D2h	Clear ZSG-PRESET		
211	00D3h	Clear information		
212	00D4h	Clear information history		
213	00D5h	Alarm history details	1 to 10: Alarm history 1 to 10	0: Not selected

■ Configuration

Configuration can be executed when all of the following conditions are satisfied.
- An alarm is not being generated.
- The motor is not operated.
- The following commands are not executed via EtherNet/IP.
  – Batch data initialization
  – All data batch initialization
  – Read batch NV memory
  – Write batch NV memory
  – Read from backup
  – Write to backup
- The following monitors or menus are not executed with the **MEXE02** software.
  – Teaching, remote operation
  – I/O test
  – Data writing
  – Reset

The table below shows the driver status before and after Configuration is executed.

Item	Configuration is ready to execute	Configuration is being executed	After Configuration is executed
PWR/ALM LED	Green light	Blink in green and red colors simultaneously	Based on the driver condition.
Electromagnetic brake	Hold/Release	Hold	
Motor excitation	Excitation/non-excitation	Non-excitation	
Output signal	Enable	Disable	Enable
Input signal	Enable	Disable	Enable

memo Even if monitor is executed while Configuration is being executed, the correct monitor value may not return.

3 Monitor commands

These commands are used to monitor the command position, command speed, alarm and information history, etc. All commands are used for read (READ).
Refer to the OPERATING MANUAL **AZ** Series Function Edition for details about parameters. When checking the OPERATING MANUAL **AZ** Series Function Edition, use the parameter name instead of the parameter ID.

Parameter ID		Name
Dec	Hex	
64	0040h	Present alarm
65	0041h	Alarm history 1
66	0042h	Alarm history 2
67	0043h	Alarm history 3
68	0044h	Alarm history 4
69	0045h	Alarm history 5
70	0046h	Alarm history 6
71	0047h	Alarm history 7
72	0048h	Alarm history 8
73	0049h	Alarm history 9
74	004Ah	Alarm history 10
97	0061h	Present selected data number
98	0062h	Present operation data number
99	0063h	Command position
100	0064h	Command speed (r/min)
101	0065h	Command speed (Hz)
102	0066h	Feedback position
103	0067h	Feedback speed (r/min)
104	0068h	Feedback speed (Hz)
105	0069h	Remaining dwell time
106	006Ah	Direct I/O
107	006Bh	Torque monitor (1=0.1 %)
109	006Dh	Cumulative load monitor
111	006Fh	Target position
112	0070h	Next number
113	0071h	Loop origin number
114	0072h	Loop count
115	0073h	Event monitor command position (NEXT)
116	0074h	Event monitor feedback position (NEXT)
117	0075h	Event monitor command position (JUMP0 – Low event)
118	0076h	Event monitor feedback position (JUMP0 – Low event)
119	0077h	Event monitor command position (JUMP1 – High event)
120	0078h	Event monitor feedback position (JUMP1 – High event)
121	0079h	Event monitor command position (Operation stop)
122	007Ah	Event monitor feedback position (Operation stop)
123	007Bh	Information
124	007Ch	Driver temperature (1=0.1 °C)
125	007Dh	Motor temperature (1=0.1 °C)
126	007Eh	Odometer (1=0.1 kRev)
127	007Fh	Tripmeter (1=0.1 kRev)

Parameter ID		Name
Dec	Hex	
128	0080h	Sequence history 1
129	0081h	Sequence history 2
130	0082h	Sequence history 3
131	0083h	Sequence history 4
132	0084h	Sequence history 5
133	0085h	Sequence history 6
134	0086h	Sequence history 7
135	0087h	Sequence history 8
136	0088h	Sequence history 9
137	0089h	Sequence history 10
138	008Ah	Sequence history 11
139	008Bh	Sequence history 12
140	008Ch	Sequence history 13
141	008Dh	Sequence history 14
142	008Eh	Sequence history 15
143	008Fh	Sequence history 16
144	0090h	Feedback position 32-bit counter
145	0091h	Command position 32-bit counter
146	0092h	CST operating current (1=0.1 %)
147	0093h	Loop count buffer
160	00A0h	Main power supply count
161	00A1h	Main power supply time (min)
162	00A2h	Control power supply count
163	00A3h	Inverter voltage (1=0.1 V)
164	00A4h	Main power voltage (DC power input driver only) [1=0.1 V]
166	00A6h	IP ADDR SW0*1
167	00A7h	IP ADDR SW1*2
169	00A9h	Elapsed time from BOOT (ms)
184	00B8h	I/O status 1
185	00B9h	I/O status 2
186	00BAh	I/O status 3
187	00BBh	I/O status 4
188	00BCh	I/O status 5
189	00BDh	I/O status 6
190	00BEh	I/O status 7
191	00BFh	I/O status 8
1280	0500h	Alarm history details (Alarm code)
1281	0501h	Alarm history details (Sub code)
1282	0502h	Alarm history details (Driver temperature)
1283	0503h	Alarm history details (Motor temperature)
1284	0504h	Alarm history details (Inverter voltage)
1285	0505h	Alarm history details (Physical I/O input)
1286	0506h	Alarm history details (R-I/O output)
1287	0507h	Alarm history details (Operation information 0)
1288	0508h	Alarm history details (Operation information 1)
1289	0509h	Alarm history details (Feedback position)
1290	050Ah	Alarm history details (Elapsed time from Boot) [ms]

Parameter ID		Name
Dec	Hex	
1291	050Bh	Alarm history details (elapsed time from starting operation) [ms]
1292	050Ch	Alarm history details (main power supply time) [min]
1296	0510h	Information history 1
1297	0511h	Information history 2
1298	0512h	Information history 3
1299	0513h	Information history 4
1300	0514h	Information history 5
1301	0515h	Information history 6
1302	0516h	Information history 7
1303	0517h	Information history 8
1304	0518h	Information history 9
1305	0519h	Information history 10
1306	051Ah	Information history 11
1307	051Bh	Information history 12
1308	051Ch	Information history 13
1309	051Dh	Information history 14
1310	051Eh	Information history 15
1311	051Fh	Information history 16
1312	0520h	Information time history 1 (ms)
1313	0521h	Information time history 2 (ms)
1314	0522h	Information time history 3 (ms)
1315	0523h	Information time history 4 (ms)
1316	0524h	Information time history 5 (ms)
1317	0525h	Information time history 6 (ms)
1318	0526h	Information time history 7 (ms)
1319	0527h	Information time history 8 (ms)
1320	0528h	Information time history 9 (ms)
1321	0529h	Information time history 10 (ms)
1322	052Ah	Information time history 11 (ms)
1323	052Bh	Information time history 12 (ms)
1324	052Ch	Information time history 13 (ms)
1325	052Dh	Information time history 14 (ms)
1326	052Eh	Information time history 15 (ms)
1327	052Fh	Information time history 16 (ms)
1472	05C0h	Latch monitor status (NEXT)
1473	05C1h	Latch monitor command position (NEXT)
1474	05C2h	Latch monitor feedback position (NEXT)
1475	05C3h	Latch monitor target position (NEXT)
1476	05C4h	Latch monitor operation number (NEXT)
1477	05C5h	Latch monitor number of loop (NEXT)
1480	05C8h	Latch monitor status (I/O event – Low event)
1481	05C9h	Latch monitor command position (I/O event – Low event)
1482	05CAh	Latch monitor feedback position (I/O event – Low event)
1483	05CBh	Latch monitor target position (I/O event – Low event)
1484	05CCh	Latch monitor operation number (I/O event – Low event)
1485	05CDh	Latch monitor number of loop (I/O event – Low event)
1488	05D0h	Latch monitor status (I/O event – High event)

Parameter ID		Name
Dec	Hex	
1489	05D1h	Latch monitor command position (I/O event – High event)
1490	05D2h	Latch monitor feedback position (I/O event – High event)
1491	05D3h	Latch monitor target position (I/O event – High event)
1492	05D4h	Latch monitor operation number (I/O event – High event)
1493	05D5h	Latch monitor number of loop (I/O event – High event)
1496	05D8h	Latch monitor status (Operation stop)
1497	05D9h	Latch monitor command position (Operation stop)
1498	05DAh	Latch monitor feedback position (Operation stop)
1499	05DBh	Latch monitor target position (Operation stop)
1500	05DCh	Latch monitor operation number (Operation stop)
1501	05DDh	Latch monitor number of loop (Operation stop)

*1 It is not described on the **AZ** Series OPERATING MANUAL Function Edition. It indicates the input status of the IP address setting switch (IP ADDR ×16).

*2 It is not described on the **AZ** Series OPERATING MANUAL Function Edition. It indicates the input status of the IP address setting switch (IP ADDR ×1).

4 Operation data R/W commands

This is a method in which the parameter ID (base address) of the base operation data number is specified to input data.
Refer to "4-3 Setting example" on p.142 for how to use the base address.

4-1 Base address of each operation data number

Base address		Operation data No.	Base address		Operation data No.	Base address		Operation data No.	Base address		Operation data No.
Dec	Hex		Dec	Hex		Dec	Hex		Dec	Hex	
3072	0C00h	No. 0	4288	10C0h	No. 38	5504	1580h	No. 76	6720	1A40h	No. 114
3104	0C20h	No. 1	4320	10E0h	No. 39	5536	15A0h	No. 77	6752	1A60h	No. 115
3136	0C40h	No. 2	4352	1100h	No. 40	5568	15C0h	No. 78	6784	1A80h	No. 116
3168	0C60h	No. 3	4384	1120h	No. 41	5600	15E0h	No. 79	6816	1AA0h	No. 117
3200	0C80h	No. 4	4416	1140h	No. 42	5632	1600h	No. 80	6848	1AC0h	No. 118
3232	0CA0h	No. 5	4448	1160h	No. 43	5664	1620h	No. 81	6880	1AE0h	No. 119
3264	0CC0h	No. 6	4480	1180h	No. 44	5696	1640h	No. 82	6912	1B00h	No. 120
3296	0CE0h	No. 7	4512	11A0h	No. 45	5728	1660h	No. 83	6944	1B20h	No. 121
3328	0D00h	No. 8	4544	11C0h	No. 46	5760	1680h	No. 84	6976	1B40h	No. 122
3360	0D20h	No. 9	4576	11E0h	No. 47	5792	16A0h	No. 85	7008	1B60h	No. 123
3392	0D40h	No. 10	4608	1200h	No. 48	5824	16C0h	No. 86	7040	1B80h	No. 124
3424	0D60h	No. 11	4640	1220h	No. 49	5856	16E0h	No. 87	7072	1BA0h	No. 125
3456	0D80h	No. 12	4672	1240h	No. 50	5888	1700h	No. 88	7104	1BC0h	No. 126
3488	0DA0h	No. 13	4704	1260h	No. 51	5920	1720h	No. 89	7136	1BE0h	No. 127
3520	0DC0h	No. 14	4736	1280h	No. 52	5952	1740h	No. 90	7168	1C00h	No. 128
3552	0DE0h	No. 15	4768	12A0h	No. 53	5984	1760h	No. 91	7200	1C20h	No. 129
3584	0E00h	No. 16	4800	12C0h	No. 54	6016	1780h	No. 92	7232	1C40h	No. 130
3616	0E20h	No. 17	4832	12E0h	No. 55	6048	17A0h	No. 93	7264	1C60h	No. 131
3648	0E40h	No. 18	4864	1300h	No. 56	6080	17C0h	No. 94	7296	1C80h	No. 132
3680	0E60h	No. 19	4896	1320h	No. 57	6112	17E0h	No. 95	7328	1CA0h	No. 133
3712	0E80h	No. 20	4928	1340h	No. 58	6144	1800h	No. 96	7360	1CC0h	No. 134
3744	0EA0h	No. 21	4960	1360h	No. 59	6176	1820h	No. 97	7392	1CE0h	No. 135
3776	0EC0h	No. 22	4992	1380h	No. 60	6208	1840h	No. 98	7424	1D00h	No. 136
3808	0EE0h	No. 23	5024	13A0h	No. 61	6240	1860h	No. 99	7456	1D20h	No. 137
3840	0F00h	No. 24	5056	13C0h	No. 62	6272	1880h	No. 100	7488	1D40h	No. 138
3872	0F20h	No. 25	5088	13E0h	No. 63	6304	18A0h	No. 101	7520	1D60h	No. 139
3904	0F40h	No. 26	5120	1400h	No. 64	6336	18C0h	No. 102	7552	1D80h	No. 140
3936	0F60h	No. 27	5152	1420h	No. 65	6368	18E0h	No. 103	7584	1DA0h	No. 141
3968	0F80h	No. 28	5184	1440h	No. 66	6400	1900h	No. 104	7616	1DC0h	No. 142
4000	0FA0h	No. 29	5216	1460h	No. 67	6432	1920h	No. 105	7648	1DE0h	No. 143
4032	0FC0h	No. 30	5248	1480h	No. 68	6464	1940h	No. 106	7680	1E00h	No. 144
4064	0FE0h	No. 31	5280	14A0h	No. 69	6496	1960h	No. 107	7712	1E20h	No. 145
4096	1000h	No. 32	5312	14C0h	No. 70	6528	1980h	No. 108	7744	1E40h	No. 146
4128	1020h	No. 33	5344	14E0h	No. 71	6560	19A0h	No. 109	7776	1E60h	No. 147
4160	1040h	No. 34	5376	1500h	No. 72	6592	19C0h	No. 110	7808	1E80h	No. 148
4192	1060h	No. 35	5408	1520h	No. 73	6624	19E0h	No. 111	7840	1EA0h	No. 149
4224	1080h	No. 36	5440	1540h	No. 74	6656	1A00h	No. 112	7872	1EC0h	No. 150
4256	10A0h	No. 37	5472	1560h	No. 75	6688	1A20h	No. 113	7904	1EE0h	No. 151

Base address		Operation data No.
Dec	Hex	
7936	1F00h	No. 152
7968	1F20h	No. 153
8000	1F40h	No. 154
8032	1F60h	No. 155
8064	1F80h	No. 156
8096	1FA0h	No. 157
8128	1FC0h	No. 158
8160	1FE0h	No. 159
8192	2000h	No. 160
8224	2020h	No. 161
8256	2040h	No. 162
8288	2060h	No. 163
8320	2080h	No. 164
8352	20A0h	No. 165
8384	20C0h	No. 166
8416	20E0h	No. 167
8448	2100h	No. 168
8480	2120h	No. 169
8512	2140h	No. 170
8544	2160h	No. 171
8576	2180h	No. 172
8608	21A0h	No. 173
8640	21C0h	No. 174
8672	21E0h	No. 175
8704	2200h	No. 176
8736	2220h	No. 177

Base address		Operation data No.
Dec	Hex	
8768	2240h	No. 178
8800	2260h	No. 179
8832	2280h	No. 180
8864	22A0h	No. 181
8896	22C0h	No. 182
8928	22E0h	No. 183
8960	2300h	No. 184
8992	2320h	No. 185
9024	2340h	No. 186
9056	2360h	No. 187
9088	2380h	No. 188
9120	23A0h	No. 189
9152	23C0h	No. 190
9184	23E0h	No. 191
9216	2400h	No. 192
9248	2420h	No. 193
9280	2440h	No. 194
9312	2460h	No. 195
9344	2480h	No. 196
9376	24A0h	No. 197
9408	24C0h	No. 198
9440	24E0h	No. 199
9472	2500h	No. 200
9504	2520h	No. 201
9536	2540h	No. 202
9568	2560h	No. 203

Base address		Operation data No.
Dec	Hex	
9600	2580h	No. 204
9632	25A0h	No. 205
9664	25C0h	No. 206
9696	25E0h	No. 207
9728	2600h	No. 208
9760	2620h	No. 209
9792	2640h	No. 210
9824	2660h	No. 211
9856	2680h	No. 212
9888	26A0h	No. 213
9920	26C0h	No. 214
9952	26E0h	No. 215
9984	2700h	No. 216
10016	2720h	No. 217
10048	2740h	No. 218
10080	2760h	No. 219
10112	2780h	No. 220
10144	27A0h	No. 221
10176	27C0h	No. 222
10208	27E0h	No. 223
10240	2800h	No. 224
10272	2820h	No. 225
10304	2840h	No. 226
10336	2860h	No. 227
10368	2880h	No. 228
10400	28A0h	No. 229

Base address		Operation data No.
Dec	Hex	
10432	28C0h	No. 230
10464	28E0h	No. 231
10496	2900h	No. 232
10528	2920h	No. 233
10560	2940h	No. 234
10592	2960h	No. 235
10624	2980h	No. 236
10656	29A0h	No. 237
10688	29C0h	No. 238
10720	29E0h	No. 239
10752	2A00h	No. 240
10784	2A20h	No. 241
10816	2A40h	No. 242
10848	2A60h	No. 243
10880	2A80h	No. 244
10912	2AA0h	No. 245
10944	2AC0h	No. 246
10976	2AE0h	No. 247
11008	2B00h	No. 248
11040	2B20h	No. 249
11072	2B40h	No. 250
11104	2B60h	No. 251
11136	2B80h	No. 252
11168	2BA0h	No. 253
11200	2BC0h	No. 254
11232	2BE0h	No. 255

4-2 Parameter ID

The setting item of operation data is set with the operation data R/W command.
The parameter ID for the setting item is arranged based on the base address of the operation data number.
(Base address ⇨p.139)
For example, in the case of the setting item "Position," 1 is added to the base address.

Parameter ID	Name	Setting range	Initial value	Update
Base address +0	Operation type	1: Absolute positioning 2: Incremental positioning (based on command position) 3: Incremental positioning (based on feedback position) 7: Continuous operation (position control) 8: Wrap absolute positioning 9: Wrap proximity positioning 10: Wrap forward direction absolute positioning 11: Wrap reverse direction absolute positioning 12: Wrap absolute push-motion 13: Wrap proximity push-motion 14: Wrap forward direction push-motion 15: Wrap reverse direction push-motion 16: Continuous operation (speed control) 17: Continuous operation (push-motion) 18: Continuous operation (torque control) 20: Absolute positioning push-motion 21: Incremental positioning push-motion (based on command position) 22: Incremental positioning push-motion (based on feedback position)	2	B
Base address +1	Position	–2,147,483,648 to 2,147,483,647 steps	0	
Base address +2	Operating speed	–4,000,000 to 4,000,000 Hz	1,000	
Base address +3	Starting/changing rate	1 to 1,000,000,000 (1=0.001 kHz/s, 1=0.001 s, or 1=0.001 ms/kHz)	1,000,000	
Base address +4	Stopping deceleration	1 to 1,000,000,000 (1=0.001 kHz/s, 1=0.001 s, or 1=0.001 ms/kHz)	1,000,000	
Base address +5	Operating current	0 to 1,000 (1=0.1 %)	1,000	
Base address +6	Drive-complete delay time	0 to 65,535 (1=0.001 s)	0	
Base address +7	Link	0: No link 1: Manual sequential 2: Automatic sequential 3: Continuous sequential operation	0	
Base address +8	Next data number	–256: Stop –2: ↓↓ (+2) –1: ↓ (+1) 0 to 255: Operation data number	–1	
Base address +9	Area offset	–2,147,483,648 to 2,147,483,647 steps	0	
Base address +10	Area width	–1: Disable 0 to 4,194,303: Set by 1 step	–1	
Base address +11	Loop count	0: None (–) 2 to 255: Number of loops (loop 2 { to loop 255 {)	0	
Base address +12	Loop offset	–4,194,304 to 4,194,303 steps	0	
Base address +13	Loop end number	0: None (–) 1: Loop end (} L-End)	0	
Base address +14	(Low) I/O event number	–1: None (–) 0 to 31: Operation I/O event number (0 to 31)	–1	

Parameter ID	Name	Setting range	Initial value	Update
Base address +15	(High) I/O event number	–1: None (–) 0 to 31: Operation I/O event number (0 to 31)	–1	B

4-3 Setting example

As an example, this section explains how to set the following operation data to the operation data No. 0 to No. 2.

Setting item	Operation data No. 0	Operation data No. 1	Operation data No. 2
Operation type	Absolute positioning	Incremental positioning (based on command position)	Incremental positioning (based on feedback position)
Position [step]	1,000	1,000	1,000
Operating speed [Hz]	1,000	1,000	1,000
Operating current [%]	50.0	70.0	100.0

■ Setting of operation data No. 0

From the table on p.139, we can find that the base address of the operation data No. 0 is "3072 (0C00h)."
Based on this base address, the parameter ID for the setting item is calculated from the table on p.141.

Base address
3072 (0C00h)

Setting item	Parameter ID			Setting value
	Calculation method	Dec	Hex	
Operation type	Base address +0	3072 + 0 = 3072	0C00h	1
Position	Base address +1	3072 + 1 = 3073	0C01h	1,000
Operating speed	Base address +2	3072 + 2 = 3074	0C02h	1,000
Operating current	Base address +5	3072 + 5 = 3077	0C05h	500

■ Setting of operation data No. 1

From the table on p.139, we can find that the base address of the operation data No. 1 is "3104 (0C20h)."
Based on this base address, the parameter ID for the setting item is calculated from the table on p.141.

Base address
3104 (0C20h)

Setting item	Parameter ID			Setting value
	Calculation method	Dec	Hex	
Operation type	Base address +0	3104 + 0 = 3104	0C20h	2
Position	Base address +1	3104 + 1 = 3105	0C21h	1,000
Operating speed	Base address +2	3104 + 2 = 3106	0C22h	1,000
Operating current	Base address +5	3104 + 5 = 3109	0C25h	700

■ Setting of operation data No. 2

From the table on p.139, we can find that the base address of the operation data No. 2 is "3136 (0C40h)."
Based on this base address, the parameter ID for the setting item is calculated from the table on p.141.

Base address
3136 (0C40h)

Setting item	Parameter ID			Setting value
	Calculation method	Dec	Hex	
Operation type	Base address +0	3136 + 0 = 3136	0C40h	3
Position	Base address +1	3136 + 1 = 3137	0C41h	1,000
Operating speed	Base address +2	3136 + 2 = 3138	0C42h	1,000
Operating current	Base address +5	3136 + 5 = 3141	0C45h	1,000

5 Operation I/O event R/W commands

If a specified event (ON/OFF of I/O) is generated during operation of the motor, another operation can be started. This is called operation I/O event. This chapter explains the address to execute the operation I/O event.

5-1 Base address of operation I/O event

Base address		Operation I/O event number
Dec	Hex	
2560	0A00h	0
2568	0A08h	1
2576	0A10h	2
2584	0A18h	3
2592	0A20h	4
2600	0A28h	5
2608	0A30h	6
2616	0A38h	7
2624	0A40h	8
2632	0A48h	9
2640	0A50h	10

Base address		Operation I/O event number
Dec	Hex	
2648	0A58h	11
2656	0A60h	12
2664	0A68h	13
2672	0A70h	14
2680	0A78h	15
2688	0A80h	16
2696	0A88h	17
2704	0A90h	18
2712	0A98h	19
2720	0AA0h	20
2728	0AA8h	21

Base address		Operation I/O event number
Dec	Hex	
2736	0AB0h	22
2744	0AB8h	23
2752	0AC0h	24
2760	0AC8h	25
2768	0AD0h	26
2776	0AD8h	27
2784	0AE0h	28
2792	0AE8h	29
2800	0AF0h	30
2808	0AF8h	31

5-2 Parameter ID for operation I/O event R/W command

The setting item of operation I/O event is set with the operation I/O event R/W command.
The parameter ID for the setting item is arranged based on the base address of the operation I/O event.
For example, in the case of the setting item "Dwell," 2 is added to the base address.

Parameter ID	Name	Setting range	Initial value	Update
Base address +0	Link	0: No link 1: Manual sequential 2: Automatic sequential 3: Continuous sequential operation	0	B
Base address +1	Next data number	−256: Stop −2: ↓↓ (+2) −1: ↓ (+1) 0 to 255: Operation data number	−256	
Base address +2	Dwell	0 to 65,535 (1=0.001 s)	0	
Base address +3	Event trigger I/O	Input signal list ⇨ p.162 Output signal list ⇨ p.163	0: Not used	
Base address +4	Event trigger type	0: No setting 1: ON (calculated cumulative ms) 2: ON (ms) 3: OFF (calculated cumulative ms) 4: OFF (ms) 5: ON edge 6: OFF edge 7: ON (cumulative ms) 8: OFF (cumulative ms)	0	
Base address +5	Event trigger counter	0 to 65,535 (1=1 ms or 1=once)	0	

6 Protect release commands

The key codes for reading/writing of data from/to the backup area and the key codes for release of function limitation by the HMI input are set.
Refer to the OPERATING MANUAL **AZ** Series Function Edition for details about parameters. When checking the OPERATING MANUAL **AZ** Series Function Edition, use the parameter name instead of the parameter ID.

Parameter ID		Name	Setting range	Initial value
Dec	Hex			
32	0020h	Backup DATA access key	Refer to the next table.	0
33	0021h	Backup DATA write key		
34	0022h	HMI release key		

Key code table

Process that requires protect release	Command name	Key code
Data writing to backup area	Backup DATA access key	20519253 (01391955h)
	Backup DATA write key	1977326743 (75DB9C97h)
Data reading from backup area	Backup DATA access key	20519253 (01391955h)
Release of limitation by HMI input	HMI release key	864617234 (33890312h)

7 Extended operation data setting R/W command

Parameters for extended operation data setting can be set.
Refer to the OPERATING MANUAL **AZ** Series Function Edition for details about parameters. When checking the OPERATING MANUAL **AZ** Series Function Edition, use the parameter name instead of the parameter ID.

Parameter ID		Name	Setting range	Initial value	Update
Dec	Hex				
320	0140h	Common acceleration rate or time	1 to 1,000,000,000 (1=0.001 kHz/s, 1=0.001 s, or 1=0.001 ms/kHz)	1,000,000	A
321	0141h	Common stopping deceleration	1 to 1,000,000,000 (1=0.001 kHz/s, 1=0.001 s, or 1=0.001 ms/kHz)	1,000,000	
326	0146h	Rate selection	0: Common rate 1: Rate of each operation data	1	
2048	0800h	Repeat start operation data number	−1: Disable 0 to 255: Operation data number	−1	
2049	0801h	Repeat end operation data number	−1: Disable 0 to 255: Operation data number	−1	
2050	0802h	Repeat time	−1: Disable 0 to 100,000,000	−1	

Note Rewrite the parameter of the extended operation data setting R/W command while operation is stopped.

8 Parameter R/W commands

These commands are used to write or read parameters.
Refer to the OPERATING MANUAL **AZ** Series Function Edition for details about parameters. When checking the OPERATING MANUAL **AZ** Series Function Edition, use the parameter name instead of the parameter ID.

8-1 Driver action simulation setting parameter

Parameter ID		Name	Setting range	Initial value	Update
Dec	Hex				
511	01FFh	Driver simulation mode	0: Use real motor 1: Virtual motor (when ABZO not connected =no ABZO information) 2: Virtual motor (when ABZO not connected =1,800 rev wrap enable) 3: Virtual motor (when ABZO not connected =900 rev wrap enable)	0	D

8-2 Basic setting parameters

Parameter ID		Name	Setting range	Initial value	Update
Dec	Hex				
294	0126h	Base current	0 to 1,000 (1=0.1 %)	1,000	A
296	0128h	Stop current	0 to 1,000 (1=0.1 %)	500	
297	0129h	Command filter setting	1: LPF (speed filter) 2: Moving average filter	1	B
298	012Ah	Command filter time constant	0 to 200 ms	1	
300	012Ch	Smooth drive function	0: Disable 1: Enable	1	C
301	012Dh	Current control mode	0: Follow the CCM input 1: Alpha control mode (CST) 2: Servo emulation mode (SVE)	0	A
302	012Eh	Servo emulation (SVE) ratio	0 to 1,000 (1=0.1 %)	1,000	
303	012Fh	SVE position loop gain	1 to 50	10	
304	0130h	SVE speed loop gain	10 to 200	180	
305	0131h	SVE speed loop integral time constant	100 to 2,000 (1=0.1 ms)	1,000	
306	0132h	Automatic current cutback function	0: Disable 1: Enable	1	
307	0133h	Automatic current cutback switching time	0 to 1,000 ms	100	
308	0134h	Operating current ramp up rate	0 to 100 ms/100 %	0	
309	0135h	Operating current ramp down rate	0 to 100 ms/100 %	0	
311	0137h	Resonance suppression control frequency	100 to 2,000 Hz	1,000	
312	0138h	Resonance suppression control gain	–500 to 500	0	
313	0139h	Deviation acceleration suppressing gain	0 to 500	45	

Parameter ID		Name	Setting range	Initial value	Update
Dec	Hex				
506	01FAh	Main power mode*	−1: Automatic discrimination (Discriminates the input power supply voltage automatically.) 0: 24 VDC 1: 48 VDC	−1	D

* This is the parameter for DC power input drivers. This is the parameter the voltage mode of the main power supply is set.

8-3 Position coordinate parameters

Parameter ID		Name	Setting range	Initial value	Update
Dec	Hex				
451	01C3h	Software overtravel	−1: Disable 0: Immediate stop 1: Deceleration stop 2: Immediate stop with alarm 3: Deceleration stop with alarm	3	A
452	01C4h	Positive software limit	−2,147,483,648 to 2,147,483,647 steps	2,147,483,647	
453	01C5h	Negative software limit	−2,147,483,648 to 2,147,483,647 steps	−2,147,483,648	
454	01C6h	Preset position	−2,147,483,648 to 2,147,483,647 steps	0	

8-4 Operation parameters

Parameter ID		Name	Setting range	Initial value	Update
Dec	Hex				
322	0142h	Starting speed	0 to 4,000,000 Hz	500	B
327	0147h	Acceleration/deceleration unit	0: kHz/s 1: s 2: ms/kHz	0	C
328	0148h	Permission of absolute positioning without setting absolute coordinates	0: Disable 1: Enable	0	B

8-5 Direct data operation parameters

Parameter ID		Name	Setting range	Initial value	Update
Dec	Hex				
272	0110h	Direct data operation zero speed command action	0: Deceleration stop 1: ZERO speed	0	B
24852	6114h	Direct data operation trigger setting	−6: Operation type −5: Position −4: Speed −3: Starting/changing rate −2: Stopping deceleration −1: Operating current 0: Disable 1: Apply all data	1	A

8-6 ABZO sensor setting parameters

Parameter ID		Name	Setting range	Initial value	Update
Dec	Hex				
2032	07F0h	Mechanism settings	0: Prioritize ABZO setting 1: Manual setting	0	D
2034	07F2h	Initial coordinate generation & wrap coordinate setting	0: Prioritize ABZO setting 1: Manual setting	0	
2035	07F3h	Mechanism limit parameter setting	0: Follow ABZO setting 1: Disable	0	
2036	07F4h	Mechanism protection parameter setting	0: Follow ABZO setting 1: Disable	0	
2037	07F5h	JOG/HOME/ZHOME operation setting	0: Prioritize ABZO setting 1: Manual setting	0	

8-7 Mechanism settings parameters

Parameter ID		Name	Setting range	Initial value	Update
Dec	Hex				
448	01C0h	Electronic gear A	1 to 65,535	1	C
449	01C1h	Electronic gear B	1 to 65,535	1	
450	01C2h	Motor rotation direction	0: Positive side=Counterclockwise 1: Positive side=Clockwise 2: Positive side=Counterclockwise (the driver parameter is applied) 3: Positive side=Clockwise (the driver parameter is applied)	1	
2017	07E1h	Mechanism lead	1 to 32,767	1	
2033	07F1h	Gear ratio setting	0: Gear ratio setting disable 1 to 32,767: Gear ratio (1=0.01)	0	
2553	09F9h	Mechanism lead decimal digit setting	0: ×1 [mm] 1: ×0.1 [mm] 2: ×0.01 [mm] 3: ×0.001 [mm]	0	

8-8 Initial coordinate generation & wrap coordinate parameters

Parameter ID		Name	Setting range	Initial value	Update
Dec	Hex				
455	01C7h	Wrap setting	0: Disable 1: Enable	1	C
457	01C9h	Initial coordinate generation & wrap setting range	Refer to the next table. (1=0.1 rev)	10	
459	01CBh	Initial coordinate generation & wrap range offset ratio	0 to 10,000 (1=0.01 %)	5,000	
460	01CCh	Initial coordinate generation & wrap range offset value	–536,870,912 to 536,870,911 steps	0	
461	01CDh	The number of the RND-ZERO output in wrap range	1 to 536,870,911 divisions	1	

- **Value that can be set in the "Initial coordinate generation & wrap setting range" parameter**

  In the table, the values which are surrounded with thick box border cannot be set in 900 rev.

memo The table shows the values when setting with the **MEXE02**. When setting via Implicit communication, multiply the values in the table by 10.

Wrap setting range [rev]						
0.5	1.8	4.8	12.0	25.0	72.0	200.0
0.6	2.0	5.0	12.5	30.0	75.0	225.0
0.8	2.4	6.0	14.4	36.0	90.0	300.0
0.9	2.5	7.2	15.0	37.5	100.0	360.0
1.0	3.0	7.5	18.0	40.0	112.5	450.0
1.2	3.6	8.0	20.0	45.0	120.0	600.0
1.5	4.0	9.0	22.5	50.0	150.0	900.0
1.6	4.5	10.0	24.0	60.0	180.0	1,800.0

8-9 JOG/HOME/ZHOME operation information setting parameters

Parameter ID		Name	Setting range	Initial value	Update
Dec	Hex				
336	0150h	(JOG) Travel amount	1 to 8,388,607 steps	1	B
337	0151h	(JOG) Operating speed	1 to 4,000,000 Hz	1,000	
338	0152h	(JOG) Acceleration/deceleration	1 to 1,000,000,000 (1=0.001 kHz/s, 1=0.001 s, or 1=0.001 ms/kHz)	1,000,000	
339	0153h	(JOG) Starting speed	0 to 4,000,000 Hz	500	
340	0154h	(JOG) Operating speed (high)	1 to 4,000,000 Hz	5,000	
344	0158h	(ZHOME) Operating speed	1 to 4,000,000 Hz	5,000	
345	0159h	(ZHOME) Acceleration/deceleration	1 to 1,000,000,000 (1=0.001 kHz/s, 1=0.001 s, or 1=0.001 ms/kHz)	1,000,000	
346	015Ah	(ZHOME) Starting speed	0 to 4,000,000 Hz	500	
350	015Eh	JOG/HOME/ZHOME command filter time constant	1 to 200 ms	1	
351	015Fh	JOG/HOME/ZHOME operating current	0 to 1,000 (1=0.1 %)	1,000	
352	0160h	(HOME) Home-seeking mode	0: 2-sensor 1: 3-sensor 2: One-way rotation 3: Push-motion	1	
353	0161h	(HOME) Starting direction	0: Negative side 1: Positive side	1	
354	0162h	(HOME) Acceleration/deceleration	1 to 1,000,000,000 (1=0.001 kHz/s, 1=0.001 s, or 1=0.001 ms/kHz)	1,000,000	
355	0163h	(HOME) Starting speed	1 to 4,000,000 Hz	500	
356	0164h	(HOME) Operating speed	1 to 4,000,000 Hz	1,000	
357	0165h	(HOME) Last speed	1 to 10,000 Hz	500	
358	0166h	(HOME) SLIT detection	0: Disable 1: Enable	0	
359	0167h	(HOME) TIM/ZSG signal detection	0: Disable 1: TIM 2: ZSG	0	
360	0168h	(HOME) Position offset	–2,147,483,647 to 2,147,483,647 steps	0	

Parameter ID		Name	Setting range	Initial value	Update
Dec	Hex				
361	0169h	(HOME) Backward steps in 2 sensor home-seeking	0 to 8,388,607 steps	500	B
362	016Ah	(HOME) Operating amount in uni-directional home-seeking	0 to 8,388,607 steps	500	
363	016Bh	(HOME) Operating current for push-home-seeking	0 to 1,000 (1=0.1 %)	1,000	
364	016Ch	(HOME) Backward steps after first entry in push-home-seeking	0 to 8,388,607 steps	0	
365	016Dh	(HOME) Pushing time in push-home-seeking	1 to 65,535 ms	200	
366	016Eh	(HOME) Backward steps in push-home-seeking	0 to 8,388,607 steps	500	

8-10 Power removal function setting parameters

Parameter ID		Name	Setting range	Initial value	Update
Dec	Hex				
400	0190h	HWTO mode selection	0: Alarm is not present 1: Alarm is present	0	A
401	0191h	HWTO delay time of checking dual system	0 to 10 (disable), 11 to 100 ms	0	
408	0198h	ETO reset ineffective period	0 to 100 ms	0	
409	0199h	ETO reset action (ETO-CLR)	1: ON-Edge 2: ON-Level	1	
410	019Ah	ETO reset action (ALM-RST)	0: Disable 1: Excitation at ON edge	0	
411	019Bh	ETO reset action (C-ON)	0: Disable 1: Excitation at ON edge	0	
412	019Ch	ETO reset action (STOP)	0: Disable 1: Excitation at ON edge	1	

8-11 Alarm setting parameters

Parameter ID		Name	Setting range	Initial value	Update
Dec	Hex				
384	0180h	Overload alarm	1 to 300 (1=0.1 s)	50	A
385	0181h	Excessive position deviation alarm	1 to 30,000 (1=0.01 rev)	300	
24968	6188h	Network bus error alarm	0: Disable 1: Enable	1	

8-12 Information setting parameters

Parameter ID		Name	Setting range	Initial value	Update
Dec	Hex				
416	01A0h	Driver temperature information (INFO-DRVTMP)	40 to 85 °C	85	A
417	01A1h	Overload time information (INFO-OLTIME)	1 to 300 (1=0.1 s)	50	
418	01A2h	Speed information (INFO-SPD)	0: Disable 1 to 12,000 r/min	0	
421	01A5h	Position deviation information (INFO-POSERR)	1 to 30,000 (1=0.01 rev)	300	
424	01A8h	Motor temperature information (INFO-MTRTMP)	40 to 120 °C	85	
425	01A9h	Overvoltage information (INFO-OVOLT) (AC power input type driver)	120 to 450 V	435	
426	01AAh	Undervoltage information (INFO-UVOLT) (AC power input type driver)	120 to 280 V	120	
427	01ABh	Overvoltage information (INFO-OVOLT) (DC power input type driver)	150 to 630 (1=0.1 V)	630	
428	01ACh	Undervoltage information (INFO-UVOLT) (DC power input type driver)	150 to 630 (1=0.1 V)	180	
431	01AFh	Tripmeter information (INFO-TRIP)	0: Disable 1 to 2,147,483,647 (1=0.1 kRev)	0	
432	01B0h	Odometer information (INFO-ODO)	0: Disable 1 to 2,147,483,647 (1=0.1 kRev)	0	
433	01B1h	Cumulative load 0 information (INFO-CULD0)	0 to 2,147,483,647	0	
434	01B2h	Cumulative load 1 information (INFO-CULD1)	0 to 2,147,483,647	0	
435	01B3h	Cumulative load value auto clear	0: Disable 1: Enable	1	
436	01B4h	Cumulative load value count divisor	1 to 32,767	1	
444	01BCh	INFO-USRIO output selection	Output signals list⇨p.163	128: CONST-OFF	
445	01BDh	INFO-USRIO output inversion	0: Not invert 1: Invert	0	
446	01BEh	Information LED condition	0: Disable (LED does not blink) 1: Enable (LED blinks)	1	
447	01BFh	Information auto clear	0: Disable (not turned OFF automatically) 1: Enable (turned OFF automatically)	1	
1952	07A0h	INFO action (assigned I/O status information (INFO-USRIO))	0: No info reflect (Only the bit output is ON.) 1: Info reflect (The bit output and the INFO output are ON and the LED blinks.)	1	
1953	07A1h	INFO action (position deviation information (INFO-POSERR))			
1954	07A2h	INFO action (driver temperature information (INFO-DRVTMP))			
1955	07A3h	INFO action (motor temperature information (INFO-MTRTMP))			
1956	07A4h	INFO action (overvoltage information (INFO-OVOLT))			
1957	07A5h	INFO action (undervoltage information (INFO-UVOLT))			

Parameter ID		Name	Setting range	Initial value	Update
Dec	Hex				
1958	07A6h	INFO action (overload time information (INFO-OLTIME))	0: No info reflect (Only the bit output is ON.) 1: Info reflect (The bit output and the INFO output are ON and the LED blinks.)	1	A
1960	07A8h	INFO action (speed information (INFO-SPD))			
1961	07A9h	INFO action (start operation error information (INFO-START))			
1962	07AAh	INFO action (start ZHOME error information (INFO-ZHOME))			
1963	07ABh	INFO action (PRESET request information (INFO-PR-REQ))			
1965	07ADh	INFO action (electronic gear setting error information (INFO-EGR-E))			
1966	07AEh	INFO action (wrap setting error information (INFO-RND-E))			
1968	07B0h	INFO action (forward operation prohibition information (INFO-FW-OT))			
1969	07B1h	INFO action (reverse operation prohibition information (INFO-RV-OT))			
1970	07B2h	INFO action (cumulative load 0 information (INFO-CULD0))			
1971	07B3h	INFO action (cumulative load 1 information (INFO-CULD1))			
1972	07B4h	INFO action (tripmeter information (INFO-TRIP))			
1973	07B5h	INFO action (odometer information (INFO-ODO))			
1980	07BCh	INFO action (start operation restricted mode information (INFO-DSLMTD))			
1981	07BDh	INFO action (I/O test mode information (INFO-IOTEST))			
1982	07BEh	INFO action (configuration request information (INFO-CFG))			
1983	07BFh	INFO action (reboot request information (INFO-RBT))			

8-13 I/O parameters

Parameter ID		Name	Setting range	Initial value	Update
Dec	Hex				
1792	0700h	STOP/STOP-COFF input action	0: Both are immediate 1: (STOP) Dec. & (STOP-COFF) Imm. 2: (STOP) Imm. & (STOP-COFF) Dec. 3: Both are deceleration	3	A
1793	0701h	FW-LS/RV-LS input action	−1: For homing sensor 0: Immediate stop 1: Deceleration stop 2: Immediate stop with alarm 3: Deceleration stop with alarm	2	
1794	0702h	FW-BLK/RV-BLK input action	0: Immediate stop 1: Deceleration stop	1	
1795	0703h	IN-POS positioning completion signal range	0 to 180 (1=0.1°)	18	

Parameter ID		Name	Setting range	Initial value	Update
Dec	Hex				
1796	0704h	IN-POS positioning completion signal offset	–18 to 18 (1=0.1°)	0	A
1797	0705h	D-SEL drive start function	0: Without START-Func. (only select data) (Only operation data number selection) 1: With START-Func (Operation data number selection + START function)	1	
1798	0706h	TEACH operation type setting	–1: Not set 1: Absolute positioning 8: Wrap absolute positioning	1	
1799	0707h	ZSG signal width	1 to 1,800 (1=0.1°)	18	
1800	0708h	RND-ZERO signal width	1 to 10,000 steps	10	
1801	0709h	RND-ZERO signal source	0: Based on feedback position 1: Based on command position	0	
1802	070Ah	MOVE minimum ON time	0 to 255 ms	0	
1803	070Bh	PAUSE standby condition selection	0: Standstill mode (current cutback) 1: Operation mode (operating current is retained)	0	
1804	070Ch	PLS-XMODE pulse multiplying factor	2 to 30 times	10	
1805	070Dh	CRNT-LMT operating current limit value	0 to 1,000 (1=0.1 %)	500	
1806	070Eh	SPD-LMT speed limit type selection	0: Ratio 1: Value	0	
1807	070Fh	SPD-LMT speed limit ratio	1 to 100 %	50	
1808	0710h	SPD-LMT speed limit value	1 to 4,000,000 Hz	1,000	
1809	0711h	JOG-C time from JOG-P to JOG	1 to 5,000 (1=0.001 s)	500	B
1810	0712h	JOG-C time from JOG to JOG-H	1 to 5,000 (1=0.001 s)	1,000	
1811	0713h	PLS-LOST check algorithm	0: Unsigned 1: Signed	0	A
1812	0714h	MON-REQ0 output data selection	1: Feedback position 2: Feedback position (32-bit counter) 3: Command position 4: Command position (32-bit counter) 8: Alarm code (8 bits) 9: Feedback position and alarm code 10: Feedback position (32-bit counter) and alarm code 11: Command position and alarm code 12: Command position (32-bit counter) and alarm code	1	B
1813	0715h	MON-REQ1 output data selection		8	
1814	0716h	PLS-OUT output data selection	0: Command position 1: Command position (32-bit counter) 2: Feedback position 3: Feedback position (32-bit counter)	0	
1815	0717h	PLS-OUT maximum frequency	1 to 10,000 (1=0.1 kHz)	100	
1816	0718h	VA mode selection	0: Feedback speed attainment (speed at feedback position) 1: Speed at command position (only internal profile) 2: Speed at feedback position & command position (only internal profile)	0	
1817	0719h	VA detection speed range	1 to 200 r/min	30	

Parameter ID		Name	Setting range	Initial value	Update
Dec	Hex				
1818	071Ah	MAREA output source	0: Feedback position (ON after operation) 1: Command position (ON after operation) 2: Feedback position (MAREA output OFF at completion) 3: Command position (MAREA output OFF at completion)	0	A
1856	0740h	AREA0 positive direction position/offset	−2,147,483,648 to 2,147,483,647 steps	0	
1857	0741h	AREA0 negative direction position/detection range			
1858	0742h	AREA1 positive direction position/offset			
1859	0743h	AREA1 negative direction position/detection range			
1860	0744h	AREA2 positive direction position/offset			
1861	0745h	AREA2 negative direction position/detection range			
1862	0746h	AREA3 positive direction position/offset			
1863	0747h	AREA3 negative direction position/detection range			
1864	0748h	AREA4 positive direction position/offset			
1865	0749h	AREA4 negative direction position/detection range			
1866	074Ah	AREA5 positive direction position/offset			
1867	074Bh	AREA5 negative direction position/detection range			
1868	074Ch	AREA6 positive direction position/offset			
1869	074Dh	AREA6 negative direction position/detection range			
1870	074Eh	AREA7 positive direction position/offset			
1871	074Fh	AREA7 negative direction position/detection range			
1872	0750h	AREA0 range setting mode	0: Absolute pos 1: Offset/width setting from the target position	0	
1873	0751h	AREA1 range setting mode			
1874	0752h	AREA2 range setting mode			
1875	0753h	AREA3 range setting mode			
1876	0754h	AREA4 range setting mode			
1877	0755h	AREA5 range setting mode			
1878	0756h	AREA6 range setting mode			
1879	0757h	AREA7 range setting mode			
1880	0758h	AREA0 positioning standard	0: Based on feedback position 1: Based on command position	0	
1881	0759h	AREA1 positioning standard			
1882	075Ah	AREA2 positioning standard			
1883	075Bh	AREA3 positioning standard			
1884	075Ch	AREA4 positioning standard			
1885	075Dh	AREA5 positioning standard			

Parameter ID		Name	Setting range	Initial value	Update
Dec	Hex				
1886	075Eh	AREA6 positioning standard	0: Based on feedback position 1: Based on command position	0	A
1887	075Fh	AREA7 positioning standard			
1888	0760h	D-SEL0 operation number selection	0 to 255: Operation data number	0	
1889	0761h	D-SEL1 operation number selection		1	
1890	0762h	D-SEL2 operation number selection		2	
1891	0763h	D-SEL3 operation number selection		3	
1892	0764h	D-SEL4 operation number selection		4	
1893	0765h	D-SEL5 operation number selection		5	
1894	0766h	D-SEL6 operation number selection		6	
1895	0767h	D-SEL7 operation number selection		7	
1896	0768h	D-END0 operation number selection	0 to 255: Operation data number	0	
1897	0769h	D-END1 operation number selection		1	
1898	076Ah	D-END2 operation number selection		2	
1899	076Bh	D-END3 operation number selection		3	
1900	076Ch	D-END4 operation number selection		4	
1901	076Dh	D-END5 operation number selection		5	
1902	076Eh	D-END6 operation number selection		6	
1903	076Fh	D-END7 operation number selection		7	
2554	09FAh	Current setting during motor standstill at T-MODE	0: Stop current 1: Operating current	0	

8-14 Direct I/O setting parameters

Parameter ID		Name	Setting range	Initial value	Update
Dec	Hex				
2112	0840h	DIN0 input function	Input signals list ⇨p.162	37: ZHOME	C
2113	0841h	DIN1 input function		1: FREE	
2114	0842h	DIN2 input function		5: STOP	
2115	0843h	DIN3 input function		8: ALM-RST	
2116	0844h	DIN4 input function		48: FW-JOG	
2117	0845h	DIN5 input function		49: RV-JOG	
2128	0850h	DIN0 inverting mode	0: Non invert 1: Invert	0	
2129	0851h	DIN1 inverting mode			
2130	0852h	DIN2 inverting mode			
2131	0853h	DIN3 inverting mode			
2132	0854h	DIN4 inverting mode			
2133	0855h	DIN5 inverting mode			
2144	0860h	DOUT0 (normal) output function	Output signals list ⇨p.163	144: HOME-END	
2145	0861h	DOUT1 (normal) output function		138: IN-POS	
2146	0862h	DOUT2 (normal) output function		133: PLS-RDY	
2147	0863h	DOUT3 (normal) output function		132: READY	
2148	0864h	DOUT4 (normal) output function		134: MOVE	
2149	0865h	DOUT5 (normal) output function		130: ALM-B	
2160	0870h	DOUT0 inverting mode	0: Non invert 1: Invert	0	
2161	0871h	DOUT1 inverting mode			
2162	0872h	DOUT2 inverting mode			
2163	0873h	DOUT3 inverting mode			
2164	0874h	DOUT4 inverting mode			
2165	0875h	DOUT5 inverting mode			
2176	0880h	DIN0 composite input function	Input signals list ⇨p.162	0: No function	C
2177	0881h	DIN1 composite input function			
2178	0882h	DIN2 composite input function			
2179	0883h	DIN3 composite input function			
2180	0884h	DIN4 composite input function			
2181	0885h	DIN5 composite input function			
2192	0890h	DOUT0 composite output function	Output signals list ⇨p.163	128: CONST-OFF	
2193	0891h	DOUT1 composite output function			
2194	0892h	DOUT2 composite output function			
2195	0893h	DOUT3 composite output function			
2196	0894h	DOUT4 composite output function			
2197	0895h	DOUT5 composite output function			
2208	08A0h	DOUT0 composite inverting mode	0: Non invert 1: Invert	0	
2209	08A1h	DOUT1 composite inverting mode			
2210	08A2h	DOUT2 composite inverting mode			
2211	08A3h	DOUT3 composite inverting mode			
2212	08A4h	DOUT4 composite inverting mode			
2213	08A5h	DOUT5 composite inverting mode			

Parameter ID		Name	Setting range	Initial value	Update
Dec	Hex				
2224	08B0h	DOUT0 composite logical combination	0: AND 1: OR	1	C
2225	08B1h	DOUT1 composite logical combination			
2226	08B2h	DOUT2 composite logical combination			
2227	08B3h	DOUT3 composite logical combination			
2228	08B4h	DOUT4 composite logical combination			
2229	08B5h	DOUT5 composite logical combination			
2240	08C0h	DIN0 ON signal dead-time	0 to 250 ms	0	
2241	08C1h	DIN1 ON signal dead-time			
2242	08C2h	DIN2 ON signal dead-time			
2243	08C3h	DIN3 ON signal dead-time			
2244	08C4h	DIN4 ON signal dead-time			
2245	08C5h	DIN5 ON signal dead-time			
2256	08D0h	DIN0 1 shot signal	0: Disable 1: Enable	0	
2257	08D1h	DIN1 1 shot signal			
2258	08D2h	DIN2 1 shot signal			
2259	08D3h	DIN3 1 shot signal			
2260	08D4h	DIN4 1 shot signal			
2261	08D5h	DIN5 1 shot signal			
2272	08E0h	DOUT0 OFF delay time	0 to 250 ms	0	
2273	08E1h	DOUT1 OFF delay time			
2274	08E2h	DOUT2 OFF delay time			
2275	08E3h	DOUT3 OFF delay time			
2276	08E4h	DOUT4 OFF delay time			
2277	08E5h	DOUT5 OFF delay time			

8-15 Remote I/O setting parameters

Parameter ID		Name	Setting range	Initial value	Update
Dec	Hex				
2304	0900h	R-IN0 input function	Input signals list ⇨p.162	0: No function	C
2305	0901h	R-IN1 input function			
2306	0902h	R-IN2 input function			
2307	0903h	R-IN3 input function			
2308	0904h	R-IN4 input function			
2309	0905h	R-IN5 input function			
2310	0906h	R-IN6 input function			
2311	0907h	R-IN7 input function			
2312	0908h	R-IN8 input function			
2313	0909h	R-IN9 input function			
2314	090Ah	R-IN10 input function			
2315	090Bh	R-IN11 input function			
2316	090Ch	R-IN12 input function			
2317	090Dh	R-IN13 input function			
2318	090Eh	R-IN14 input function			
2319	090Fh	R-IN15 input function			

Parameter ID		Name	Setting range	Initial value	Update
Dec	Hex				
2320	0910h	R-OUT0 output function	Output signals list ⇨p.163	64: M0_R	C
2321	0911h	R-OUT1 output function		65: M1_R	
2322	0912h	R-OUT2 output function		66: M2_R	
2323	0913h	R-OUT3 output function		32: START_R	
2324	0914h	R-OUT4 output function		144: HOME-END	
2325	0915h	R-OUT5 output function		132: READY	
2326	0916h	R-OUT6 output function		135: INFO	
2327	0917h	R-OUT7 output function		129: ALM-A	
2328	0918h	R-OUT8 output function		136: SYS-BSY	
2329	0919h	R-OUT9 output function		160: AREA0	
2330	091Ah	R-OUT10 output function		161: AREA1	
2331	091Bh	R-OUT11 output function		162: AREA2	
2332	091Ch	R-OUT12 output function		157: TIM	
2333	091Dh	R-OUT13 output function		134: MOVE	
2334	091Eh	R-OUT14 output function		138: IN-POS	
2335	091Fh	R-OUT15 output function		140: TLC	
2352	0930h	R-OUT0 OFF delay time	0 to 250 ms	0	
2353	0931h	R-OUT1 OFF delay time			
2354	0932h	R-OUT2 OFF delay time			
2355	0933h	R-OUT3 OFF delay time			
2356	0934h	R-OUT4 OFF delay time			
2357	0935h	R-OUT5 OFF delay time			
2358	0936h	R-OUT6 OFF delay time			
2359	0937h	R-OUT7 OFF delay time			
2360	0938h	R-OUT8 OFF delay time			
2361	0939h	R-OUT9 OFF delay time			
2362	093Ah	R-OUT10 OFF delay time			
2363	093Bh	R-OUT11 OFF delay time			
2364	093Ch	R-OUT12 OFF delay time			
2365	093Dh	R-OUT13 OFF delay time			
2366	093Eh	R-OUT14 OFF delay time			
2367	093Fh	R-OUT15 OFF delay time			

8-16 Extended input setting parameters

Parameter ID		Name	Setting range	Initial value	Update
Dec	Hex				
2416	0970h	Extended input (EXT-IN) function	Input signals list⇨p.162	9: P-PRESET	C
2417	0971h	Extended input (EXT-IN) inverting mode	0: Non invert 1: Invert	0	
2418	0972h	Extended input (EXT-IN) interlock releasing time	0: Interlock disabled 1 to 50 (1=0.1 s)	10	A
2419	0973h	Extended input (EXT-IN) interlock releasing duration	0 to 50 (1=0.1 s)	30	
2420	0974h	Extended input (EXT-IN) ON monitor time	0 to 50 (1=0.1 s)	10	

8-17 Differential output setting parameters

Parameter ID		Name	Setting range	Initial value	Update
Dec	Hex				
2424	0978h	Differential output mode selection	–1: Non-out 0: PLS (FB-POS) 8: IO-OUT	0	C
2426	097Ah	Differential output (EXT-OUTA) function selection on I/O mode	Output signals list ⇨p.163	128: CONST-OFF	
2427	097Bh	Differential output (EXT-OUTB) function selection on I/O mode			
2428	097Ch	Differential output (EXT-OUTA) inverting mode on I/O mode	0: Non invert 1: Invert	0	
2429	097Dh	Differential output (EXT-OUTB) inverting mode on I/O mode			
2430	097Eh	Differential output (EXT-OUTA) OFF delay time on I/O mode	0 to 250 ms	0	
2431	097Fh	Differential output (EXT-OUTB) OFF delay time on I/O mode			

8-18 Virtual input parameters

Parameter ID		Name	Setting range	Initial value	Update
Dec	Hex				
2368	0940h	Virtual input (VIR-IN0) function	Input signals list ⇨p.162	0: No function	C
2369	0941h	Virtual input (VIR-IN1) function			
2370	0942h	Virtual input (VIR-IN2) function			
2371	0943h	Virtual input (VIR-IN3) function			
2372	0944h	Virtual input (VIR-IN0) source selection	Output signals list ⇨p.163	128: CONST-OFF	
2373	0945h	Virtual input (VIR-IN1) source selection			
2374	0946h	Virtual input (VIR-IN2) source selection			
2375	0947h	Virtual input (VIR-IN3) source selection			
2376	0948h	Virtual input (VIR-IN0) inverting mode	0: Non invert 1: Invert	0	
2377	0949h	Virtual input (VIR-IN1) inverting mode			
2378	094Ah	Virtual input (VIR-IN2) inverting mode			
2379	094Bh	Virtual input (VIR-IN3) inverting mode			
2380	094Ch	Virtual input (VIR-IN0) ON signal dead time	0 to 250 ms	0	
2381	094Dh	Virtual input (VIR-IN1) ON signal dead time			
2382	094Eh	Virtual input (VIR-IN2) ON signal dead time			
2383	094Fh	Virtual input (VIR-IN3) ON signal dead time			
2384	0950h	Virtual input (VIR-IN0) 1 shot signal mode	0: Disable 1: Enable	0	
2385	0951h	Virtual input (VIR-IN1) 1 shot signal mode			
2386	0952h	Virtual input (VIR-IN2) 1 shot signal mode			
2387	0953h	Virtual input (VIR-IN3) 1 shot signal mode			

8-19 User output setting parameters

Parameter ID		Name	Setting range	Initial value	Update
Dec	Hex				
2400	0960h	User output (USR-OUT0) source A function	Output signals list ⇨p.163	128: CONST-OFF	C
2401	0961h	User output (USR-OUT1) source A function			
2402	0962h	User output (USR-OUT0) source A inverting mode	0: Non invert 1: Invert	0	
2403	0963h	User output (USR-OUT1) source A inverting mode			
2404	0964h	User output (USR-OUT0) source B function	Output signals list ⇨p.163	128: CONST-OFF	
2405	0965h	User output (USR-OUT1) source B function			
2406	0966h	User output (USR-OUT0) source B inverting mode	0: Non invert 1: Invert	0	
2407	0967h	User output (USR-OUT1) source B inverting mode			
2408	0968h	User output (USR-OUT0) logical operation	0: AND 1: OR	1	
2409	0969h	User output (USR-OUT1) logical operation			

8-20 Driver mode setting parameters

Parameter ID		Name	Setting range	Initial value	Update
Dec	Hex				
496	01F0h	PULSE-I/F mode selection	−1: Disable 1: 2 pulse input mode 2: 1 pulse input mode 3: Phase-shifted pulses input mode (×1) 4: Phase-shifted pulses input mode (×2) 5: Phase-shifted pulses input mode (×4)	1	D
498	01F2h	USB-ID enable	0: Disable 1: Enable	1	
499	01F3h	USB-ID	0 to 999,999,999	0	
2555	09FBh	USB-PID	0 to 31	0	

8-21 EtherNet/IP communication setting parameters

● **Assignable monitor setting parameters**

Parameter ID		Name	Description	Setting range	Initial value	Update
Dec	Hex					
25600	6400h	Assignable monitor address 0	Sets the parameter ID to show on the assignable monitor.	Set from items of "5 Parameter ID lists."	124: Driver temperature	A
25601	6401h	Assignable monitor address 1			125: Motor temperature	
25602	6402h	Assignable monitor address 2			109: Cumulative load monitor	
25603	6403h	Assignable monitor address 3			127: Tripmeter	

- **IP address setting parameters**

These are set using the **MEXE02**. They cannot be read or written via Implicit communication.

Parameter ID		Name	Description	Setting range	Initial value	Update
Dec	Hex					
–	–	Configuration control	Sets how to obtain the IP address.	0: Parameter 2: DHCP server	2	D
–	–	IP address 1	Sets the IP address.	0 to 255	192	
–	–	IP address 2			168	
–	–	IP address 3			1	
–	–	IP address 4			1	
–	–	Network mask 1	Sets the subnet mask.	0 to 255	255	
–	–	Network mask 2			255	
–	–	Network mask 3			255	
–	–	Network mask 4			0	
–	–	Gateway address 1	Sets the default gateway.	0 to 255	0	
–	–	Gateway address 2			0	
–	–	Gateway address 3			0	
–	–	Gateway address 4			0	

9 I/O signals assignment list

9-1 Input signals

To assign signals via network, use the "assignment number" in the table instead of the signal names.

Assignment number	Signal name
0	No function
1	FREE
2	C-ON
3	CLR
4	STOP-COFF
5	STOP
6	PAUSE
7	BREAK-ATSQ
8	ALM-RST
9	P-PRESET
10	EL-PRST
12	ETO-CLR
13	LAT-CLR
14	INFO-CLR
16	HMI
18	CCM
19	PLS-XMODE
20	PLS-DIS
21	T-MODE
22	CRNT-LMT
23	SPD-LMT
26	FW-BLK
27	RV-BLK
28	FW-LS
29	RV-LS
30	HOMES
31	SLIT
32	START

Assignment number	Signal name
33	SSTART
35	NEXT
36	HOME
37	ZHOME
40	D-SEL0
41	D-SEL1
42	D-SEL2
43	D-SEL3
44	D-SEL4
45	D-SEL5
46	D-SEL6
47	D-SEL7
48	FW-JOG
49	RV-JOG
50	FW-JOG-H
51	RV-JOG-H
52	FW-JOG-P
53	RV-JOG-P
54	FW-JOG-C
55	RV-JOG-C
56	FW-POS
57	RV-POS
58	FW-SPD
59	RV-SPD
60	FW-PSH
61	RV-PSH
64	M0
65	M1

Assignment number	Signal name
66	M2
67	M3
68	M4
69	M5
70	M6
71	M7
75	TEACH
76	MON-REQ0
77	MON-REQ1
78	MON-CLK
79	PLSM-REQ
80	R0
81	R1
82	R2
83	R3
84	R4
85	R5
86	R6
87	R7
88	R8
89	R9
90	R10
91	R11
92	R12
93	R13
94	R14
95	R15

9-2 Output signals

To assign signals via network, use the "assignment number" in the table instead of the signal names.

Assignment number	Signal name
0	No function
1	FREE_R
2	C-ON_R
3	CLR_R
4	STOP-COFF_R
5	STOP_R
6	PAUSE_R
7	BREAK-ATSQ_R
8	ALM-RST_R
9	P-PRESET_R
10	EL-PRST_R
12	ETO-CLR_R
13	LAT-CLR_R
14	INFO-CLR_R
16	HMI_R
18	CCM_R
19	PLS-XMODE_R
20	PLS-DIS_R
21	T-MODE_R
22	CRNT-LMT_R
23	SPD-LMT_R
26	FW-BLK_R
27	RV-BLK_R
28	FW-LS_R
29	RV-LS_R
30	HOMES_R
31	SLIT_R
32	START_R
33	SSTART_R
35	NEXT_R
36	HOME_R
37	ZHOME_R
40	D-SEL0_R
41	D-SEL1_R
42	D-SEL2_R
43	D-SEL3_R
44	D-SEL4_R
45	D-SEL5_R
46	D-SEL6_R
47	D-SEL7_R
48	FW-JOG_R
49	RV-JOG_R
50	FW-JOG-H_R
51	RV-JOG-H_R

Assignment number	Signal name
52	FW-JOG-P_R
53	RV-JOG-P_R
54	FW-JOG-C_R
55	RV-JOG-C_R
56	FW-POS_R
57	RV-POS_R
58	FW-SPD_R
59	RV-SPD_R
60	FW-PSH_R
61	RV-PSH_R
64	M0_R
65	M1_R
66	M2_R
67	M3_R
68	M4_R
69	M5_R
70	M6_R
71	M7_R
75	TEACH_R
76	MON-REQ0_R
77	MON-REQ1_R
78	MON-CLK_R
79	PLSM-REQ_R
80	R0_R
81	R1_R
82	R2_R
83	R3_R
84	R4_R
85	R5_R
86	R6_R
87	R7_R
88	R8_R
89	R9_R
90	R10_R
91	R11_R
92	R12_R
93	R13_R
94	R14_R
95	R15_R
128	CONST-OFF
129	ALM-A
130	ALM-B
131	SYS-RDY
132	READY

Assignment number	Signal name
133	PLS-RDY
134	MOVE
135	INFO
136	SYS-BSY
137	ETO-MON
138	IN-POS
140	TLC
141	VA
142	CRNT
143	AUTO-CD
144	HOME-END
145	ABSPEN
146	ELPRST-MON
149	PRST-DIS
150	PRST-STLD
151	ORGN-STLD
152	RND-OVF
153	FW-SLS
154	RV-SLS
155	ZSG
156	RND-ZERO
157	TIM
159	MAREA
160	AREA0
161	AREA1
162	AREA2
163	AREA3
164	AREA4
165	AREA5
166	AREA6
167	AREA7
168	MPS
169	MBC
170	RG
172	EDM-MON
173	HWTOIN-MON
176	MON-OUT
177	PLS-OUTR
180	USR-OUT0
181	USR-OUT1
192	CRNT-LMTD
193	SPD-LMTD
196	OPE-BSY
197	PAUSE-BSY

Assignment number	Signal name
198	SEQ-BSY
199	DELAY-BSY
200	JUMP0-LAT
201	JUMP1-LAT
202	NEXT-LAT
203	PLS-LOST
204	DCMD-RDY
205	DCMD-FULL
207	M-CHG
208	M-ACT0
209	M-ACT1
210	M-ACT2
211	M-ACT3
212	M-ACT4
213	M-ACT5
214	M-ACT6
215	M-ACT7
216	D-END0
217	D-END1
218	D-END2
219	D-END3
220	D-END4
221	D-END5
222	D-END6

Assignment number	Signal name
223	D-END7
224	INFO-USRIO
225	INFO-POSERR
226	INFO-DRVTMP
227	INFO-MTRTMP
228	INFO-OVOLT
229	INFO-UVOLT
230	INFO-OLTIME
232	INFO-SPD
233	INFO-START
234	INFO-ZHOME
235	INFO-PR-REQ
237	INFO-EGR-E
238	INFO-RND-E
240	INFO-FW-OT
241	INFO-RV-OT
242	INFO-CULD0
243	INFO-CULD1
244	INFO-TRIP
245	INFO-ODO
252	INFO-DSLMTD
253	INFO-IOTEST
254	INFO-CFG
255	INFO-RBT

6 Troubleshooting

This part describes alarm and information functions.

◆Table of contents

1 Detection of communication errors.....166

1-1 Communication timeout 166

1-2 IP address conflict.....166

2 Alarms.....167

2-1 Alarm reset.....167

2-2 Alarm history.....167

2-3 Generation condition of alarms 167

2-4 Alarm list.....168

2-5 Timing chart 175

3 Information.....177

3-1 Information history.....180

3-2 Information list.....180

4 Troubleshooting and remedial actions 183

1 Detection of communication errors

This chapter explains a function to detect that an error occurred in EtherNet/IP.

1-1 Communication timeout

If Implicit communication is interrupted due to disconnection of the EtherNet/IP communication cable or other reasons, the communication timeout is detected.
When the communication timeout is detected, the NS LED on the driver blinks in red.
When connection with the scanner is established again, the communication timeout is automatically cleared, and the NS LED on the driver returns to be lit in green.
If the communication timeout is detected, check the following points.

- Is the EtherNet/IP communication cable disconnected?
- Is the power supply for the scanner is turned on?

1-2 IP address conflict

If an IP address of the EtherNet/IP compatible products is duplicated in the same system, the IP address conflict is detected.
When the IP address conflict is detected, the NS LED on the driver is lit in red.
If the IP address conflict is detected, change the setting so that an IP address of the EtherNet/IP compatible products is not duplicated.
Check the IP address is not duplicated, and then turn on the control power supply again.

2 Alarms

This driver has the alarm function to protect from temperature rise, poor connection, error in operation, and others. If an alarm is generated, the ALM-A output is turned ON and the ALM-B output is turned OFF to stop the motor. At the same time, the PWR/ALM LED blinks in red.
Details of the alarm being generated can be checked by counting the number of times the PWR/ALM LED blinks, or using EtherNet/IP or the **MEXE02**.

2-1 Alarm reset

Before resetting an alarm, always remove the cause of the alarm and ensure safety, and perform one of the reset operations specified next.

- Turn the ALM-RST input ON. (The alarm will be reset at the ON edge of the input.)
- Execute the alarm reset of the maintenance command via EtherNet/IP.
- Execute the alarm reset using the **MEXE02**.
- Turn on the control power supply again.

Note

- Some alarms cannot be reset by other methods than turning on the control power supply again. Check with "2-4 Alarm list" on p.168.
- An alarm of the absolute position error can be reset if the position preset or return-to-home operation is performed. If it cannot be reset by these methods, the ABZO sensor may be damaged.

2-2 Alarm history

Up to 10 generated alarm items are stored in the non-volatile memory in order of the latest to oldest. The alarm history stored in the non-volatile memory can be read or cleared if one of the following is performed.

- Read the alarm history by the monitor command via EtherNet/IP.
- Clear the alarm history by the maintenance command via EtherNet/IP.
- Read and clear the alarm history using the **MEXE02**.

2-3 Generation condition of alarms

Alarms shown in the table will be generated if the generation condition is exceeded.

Alarm code	Alarm name	Motor model	Generation condition	
			AC power input driver	DC power input driver
21h	Main circuit overheat [°C (°F)]	–	85 (185)	85 (185)
22h	Overvoltage (V)	–	430	63
26h	Motor overheat [°C (°F)]	–	85 (185)	85 (185)
31h	Overspeed (r/min)	**AZM14 AZM15 AZM24 AZM26**	–	8,000
		AZM46 AZM48 AZM66	8,000	4,500
		AZM69	8,000	2,500
		AZM98 AZM911	5,000	–
34h	Command pulse error (r/min)	–	38,400	38,400

2-4 Alarm list

Alarm code	Number of times LED blinks	Alarm type	Cause
10h	4	Excessive position deviation	• When the motor was in a state of current ON, the deviation between the command position and feedback position exceeded the value set in the "Excessive position deviation alarm" parameter in the motor output shaft. • A load is large. • The acceleration/deceleration time is too short or the acceleration/deceleration rate is too fast relative to the load. • The operating range of positioning push-motion SD operation was exceeded.
20h	5	Overcurrent	The motor, the cable, and the driver output circuit were short-circuited.
21h	2	Main circuit overheat	The internal temperature of the driver reached the upper limit of the specification value.
22h	3	Overvoltage (AC power input driver)	• The main power supply voltage exceeded the permissible value. • A large load inertia was suddenly stopped. • Vertical operation (elevating operation) was performed.
22h	3	Overvoltage (DC power input driver)	• The main power supply voltage exceeded the permissible value. • A large load inertia was suddenly stopped. • Vertical operation (elevating operation) was performed.
23h	3	Main power supply OFF	The main power supply was shut off during operation.
25h	3	Undervoltage	The main power supply was shut off momentarily or a voltage shortage was generated.
26h	8	Motor overheat	The detection temperature of the ABZO sensor reached the upper limit of the specification value.
28h	8	Sensor error	An error of the ABZO sensor was detected during operation.
2Ah	8	ABZO sensor communication error	An error was detected in communication between the driver and ABZO sensor.
30h	2	Overload	A load exceeding the maximum torque was applied for the time exceeded the value set in the "Overload alarm" parameter.
31h	2	Overspeed	The feedback speed of the motor output shaft exceeded the specification value.
33h	7	Absolute position error	The home information of the ABZO sensor was damaged.
34h	2	Command pulse error	The command pulse frequency exceeded the specification value.

Remedial action	How to reset	Motor excitation *
• Decrease the load. • Increase the acceleration/deceleration time or slow the acceleration/deceleration rate. • Increase the operating current. • Reconsider the operation data.	Any of reset operations	Non-excitation
Turn off the main power supply and the control power supply first, and check the motor, the cable, and the driver are not damaged. After that, turn on the main power supply and the control power supply again. If the alarm is still not reset, the motor, the cable, or the driver may be damaged. Contact your nearest Oriental Motor sales office.	Turn on the control power supply again	Non-excitation
Reconsider the ventilation condition.	Any of reset operations	Non-excitation
• Check the input voltage of the main power supply. • Decrease the load. • Increase the acceleration/deceleration time or slow the acceleration/deceleration rate. • Connect our regeneration resistor **RGB100**.	Turn on the control power supply again	Non-excitation
• Check the input voltage of the main power supply. • Decrease the load. • Increase the acceleration/deceleration time or slow the acceleration/deceleration rate.	Any of reset operations	Non-excitation
Check if the main power supply is applied properly.	Any of reset operations	Non-excitation
Check the input voltage of the main power supply.	Any of reset operations	Non-excitation
• Check the heat radiation condition of the motor. • Reconsider the ventilation condition.	Any of reset operations	Non-excitation
Turn off the main power supply and control power supply, and check the connection of the motor. After that, turn on the main power supply and control power supply again.	Turn on the control power supply again	Non-excitation
Turn off the main power supply and control power supply, and check the connection of the ABZO sensor. After that, turn on the main power supply and control power supply again.	Turn on the control power supply again	Non-excitation
• Decrease the load. • Increase the acceleration/deceleration time or slow the acceleration/deceleration rate. • Increase the operating current.	Any of reset operations	Non-excitation
• Reconsider the "Electronic gear" parameter and set the speed of the motor output shaft to a value lower than the specification value. • If an overshoot is occurred at the time of accelerating, increase the acceleration time or slow the acceleration rate.	Any of reset operations	Non-excitation
Perform the position preset or return-to-home operation to set the home again.	Turn on the control power supply again	Non-excitation
Decrease the frequency of the command pulse.	Any of reset operations	Non-excitation

Alarm code	Number of times LED blinks	Alarm type	Cause
41h	9	EEPROM error	The data stored in the driver was damaged.
42h	8	Sensor error at power-on	An error of the ABZO sensor was detected when the control power supply was turned on.
43h	8	Rotation error at power on	The motor was being rotated when the control power supply was turned on.
44h	8	Encoder EEPROM error	The data stored in the ABZO sensor was damaged.
45h	8	Motor combination error	A motor not allowed to combine with the driver was connected. (⇨ Refer to p.174 for details.)
4Ah	7	Return-to-home incomplete	Absolute positioning operation was started in a state where the position coordinate had not been set.
51h	2	Regeneration resistor overheat (AC power input driver only)	• The regeneration resistor **RGB100** is not connected properly. • The regeneration resistor **RGB100** was overheated extraordinarily.
53h	2	HWTO input circuit error	• The time after either the HWTO1 input or the HWTO2 input is turned OFF until the other input is turned OFF exceeded the value set in the "HWTO delay time of checking dual system" parameter. • An error of the circuit corresponding to the phenomenon above was detected.
60h	7	±LS both sides active	• When the "FW-LS/RV-LS input action" parameter is set to "2: Immediate stop with alarm" or "3: Deceleration stop with alarm," both the FW-LS input and the RV-LS input were detected. • Return-to-home operation was executed in a state where both the FW-LS input and the RV-LS input were detected.
61h	7	Reverse ±LS connection	The LS input opposite to the operating direction was detected while return-to-home operation in 2-sensor mode or 3-sensor mode was performed.
62h	7	Return-to-home operation error	• An unanticipated load was applied while return-to-home operation was performed. • The installation positions of the FW-LS and RV-LS sensors and the HOME sensor are near to each other. • Position preset processing upon completion of return-to-home operation was failed. • In return-to-home operation in one-way rotation mode, the motor passed by the HOME sensor during deceleration stop.
63h	7	No HOMES	The HOMES input was not detected at a position between the FW-LS input and the RV-LS input while return-to-home operation in 3-sensor mode was performed.

Remedial action	How to reset	Motor excitation *
Initialize all parameters.	Turn on the control power supply again	Non-excitation
Turn off the main power supply and control power supply, and check the connection of the ABZO sensor. After that, turn on the main power supply and control power supply again.	Turn on the control power supply again	Non-excitation
Reconsider the load conditions so that the motor output shaft does not rotate by an external force when the control power supply is turned on.	Turn on the control power supply again	Non-excitation
Execute either of the following operations. If the same alarm is still generated, the ABZO sensor has been damaged. Contact your nearest Oriental Motor sales office. • Set phase Z again with the "ZSG-PRESET" of the maintenance command. • Execute the "Clear tripmeter" of the maintenance command.	Turn on the control power supply again	Non-excitation
Check the motor model and the driver model, and connect them in the correct combination.	Turn on the control power supply again	Non-excitation
Execute the position preset or return-to-home operation.	Any of reset operations	Excitation
• If the regeneration resistor **RGB100** is not used, short the TH1 and TH2 terminals of the CN1. • Connect the regeneration resistor **RGB100** properly. • The allowable regenerative power of the regeneration resistor **RGB100** is exceeded. Reconsider the load and operating conditions.	Turn on the control power supply again	Non-excitation
• Increase the value set in the "HWTO delay time of checking dual system" parameter. • Check the wiring of the HWTO1 input and the HWTO2 input.	Turn on the control power supply again	Non-excitation
Check the sensor logic installed and the "Inverting mode" parameter.	Any of reset operations	Excitation
Check the wiring of the sensor.	Any of reset operations	Excitation
• Check the load. • Reconsider the sensor installation positions and the starting direction of motor operation. • See that a load exceeding the maximum torque is not applied upon completion of return-to-home operation. • Reconsider the specification of the HOME sensor and the "(HOME) Acceleration/deceleration" parameter.	Any of reset operations	Excitation
Install the HOME sensor at a position between the FW-LS and RV-LS sensors.	Any of reset operations	Excitation

Alarm code	Number of times LED blinks	Alarm type	Cause
64h	7	TIM, ZSG, SLIT signal error	None of the TIM output, the ZSG output, or the SLIT input could be detected during return-to-home operation.
66h	7	Hardware overtravel	When the "FW-LS/RV-LS input action" parameter is set to "2: Immediate stop with alarm" or "3: Deceleration stop with alarm," the FW-LS input or the RV-LS input was detected.
67h	7	Software overtravel	When the "Software overtravel" parameter is set to "2: Immediate stop with alarm" or "3: Deceleration stop with alarm," the motor position reached the set value of the software limit.
68h	1	HWTO input detection	When the "HWTO mode selection" parameter is set to "1: Alarm is present," the HWTO1 input or the HWTO2 input was turned OFF.
6Ah	7	Return-to-home operation offset error	When offset movement as part of return-to-home operation is performed, the FW-LS input or the RV-LS input was detected.
6Dh	7	Mechanical overtravel	The product having set the home reached the mechanism limit stored in the ABZO sensor.
70h	7	Operation data error	• Stored data operation was performed with data whose operating speed was 0. • Operation was performed at the operating speed or operating current exceeding the value set in the "Mechanism protection parameter." • Wrap operation was executed when wrap setting was disabled. • Push-motion operation or push-motion return-to-home operation was performed with the **DG**II Series.
71h	7	Electronic gear setting error	The resolution set in the "Electronic gear" parameter was out of the specification.
72h	7	Wrap setting error	The control power supply was turned on with the value set in the "Wrap setting" parameter that is inconsistent with the resolution set in the "Electronic gear" parameter.
81h	7	Network bus error	Implicit communication of Exclusive Owner connection was disconnected during operation.
82h	7	Network module error	An error was detected in the network module.
F0h	Lit	CPU error	CPU malfunctioned.

* The motor excitation when an alarm is generated is as follows.
Non-excitation: If an alarm is generated, the motor current is cut off and the motor holding force is lost.
In the case of the electromagnetic brake motor, the electromagnetic brake automatically holds the position.
Excitation: Even if an alarm is generated, the motor current is not cut off and the motor position is held.

Remedial action	How to reset	Motor excitation *
• Reconsider the connection status of the load and the position of the HOME sensor so that these signals should be ON while the HOMES input is ON. • When a signal is not used, set the "(HOME) TIM/ZSG signal detection" parameter or the "(HOME) SLIT detection" parameter to "0: Disable."	Any of reset operations	Excitation
Reset the alarm and then escape from the sensor by operating the motor or manually.	Any of reset operations	Excitation
• Reconsider the operation data. • Reset the alarm and then escape from the sensor by operating the motor or manually.	Any of reset operations	Excitation
Turn the HWTO1 input and the HWTO2 input ON.	Any of reset operations	Non-excitation
Check the offset value.	Any of reset operations	Excitation
• Check the travel amount (position). • Reset the alarm and then escape from the sensor by operating the motor or manually.	Any of reset operations	Excitation
• Check the operation data. • Check the value set in the "Mechanism protection parameter" using the unit information monitor of the **MEXE02**. • Check the wrap setting. • Push-motion operation as well as push-motion return-to-home operation cannot be performed with the **DG**II Series.	Any of reset operations	Excitation
Reconsider the "Electronic gear" parameter, and set so that the resolution should be in the range of the specification.	Turn on the control power supply again	Non-excitation
Set the wrap setting properly, and turn on the control power supply again.	Turn on the control power supply again	Non-excitation
Check the connection with the scanner and the condition of the power supply of the scanner.	Any of reset operations	Excitation
Turn on the control power supply again.	Turn on the control power supply again	Non-excitation
Turn on the control power supply again.	–	–

Related parameters

Parameter ID		Name	Description	Initial value
Dec	Hex			
384	0180h	Overload alarm	Sets the condition in which the overload alarm is generated. **[Setting range]** 1 to 300 (1=0.1 s)	50
385	0181h	Excessive position deviation alarm	Sets the condition in which the excessive position deviation alarm is generated. **[Setting range]** 1 to 30,000 (1=0.01 rev)	300
24968	6188h	Network bus error alarm	Sets the function of the network bus error alarm. **[Setting range]** 0: Network bus error alarm is disabled 1: Network bus error alarm is enabled	1

■ About causes of the motor combination error (alarm code 45h)

An alarm of the motor combination error is generated in the following conditions.

- When the motor for a DC power supply was connected to the AC power input driver.
- When the motor for an AC power supply was connected to the DC power input driver.
- When the motor of frame size 20 mm (0.79 in.) or 28 mm (1.10 in.) was connected to the DC power input driver and 48 VDC was applied.

2-5 Timing chart

■ When the motor remains in an excitation state even if an alarm is generated

1. If an error occurs, the ALM-B output, the MOVE output, and the PLS-RDY output are turned OFF.
   At the same time, the motor stops.
2. Remove the cause of the alarm and then turn the ALM-RST input ON.
   The alarm is reset, and the ALM-B output, the READY output, and the PLS-RDY output are turned ON.

memo When resetting the alarm, stop the pulse input. If the alarm is reset in a state of inputting pulses, the motor may start suddenly, causing injury or damage to equipment.

3. Check the ALM-B output has been turned ON and then turn the ALM-RST input OFF.

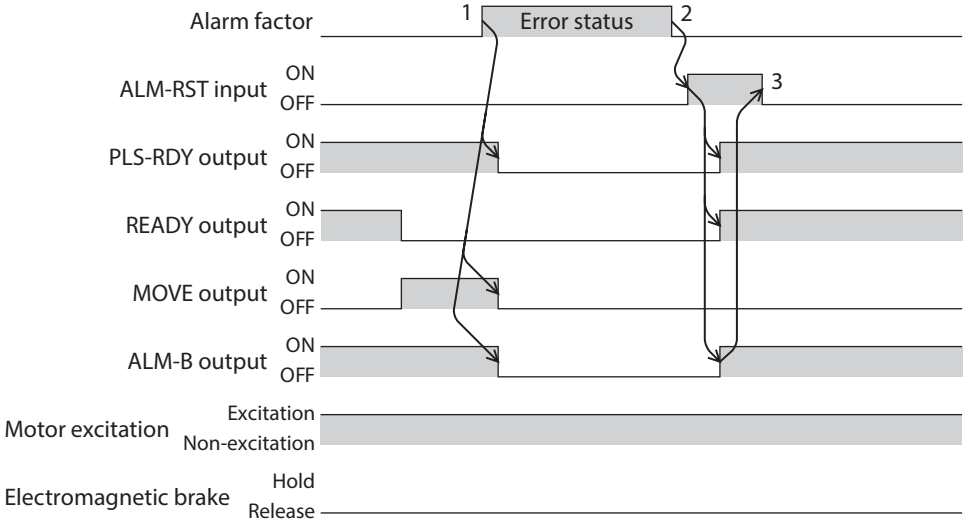

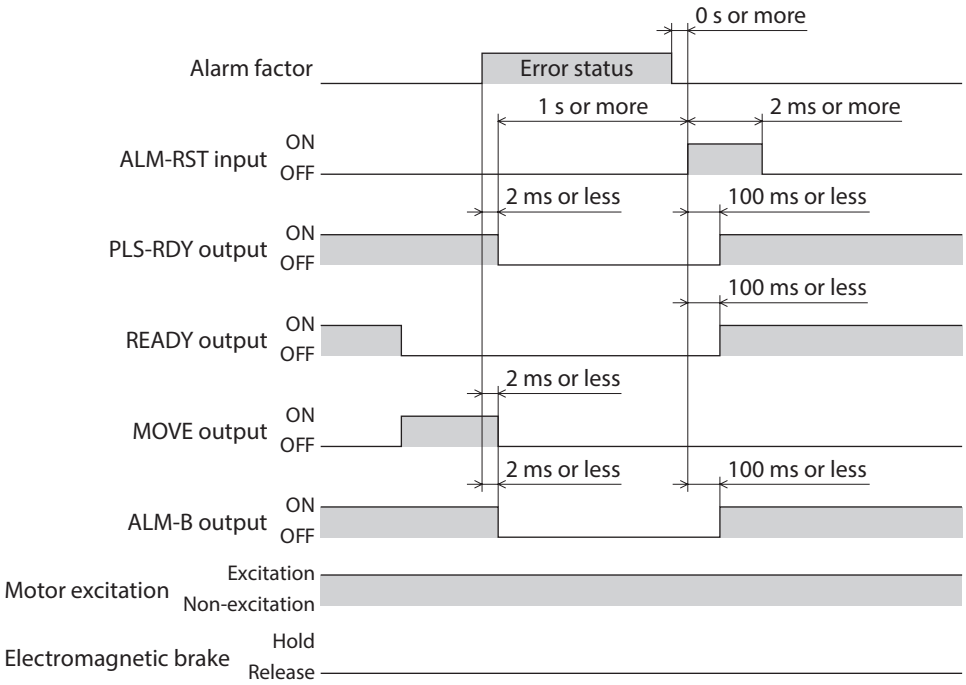

■ When the motor puts into a non-excitation state if an alarm is generated

1. If an error occurs, the ALM-B output, the MOVE output, and the PLS-RDY output are turned OFF.
   At the same time, the motor stops.
2. Remove the cause of the alarm and then turn the ALM-RST input ON.
   The alarm is reset, and the ALM-B output, the READY output, and the PLS-RDY output are turned ON.

memo When resetting the alarm, stop the pulse input. If the alarm is reset in a state of inputting pulses, the motor may start suddenly, causing injury or damage to equipment.

3. Check the ALM-B output has been turned ON and then turn the ALM-RST input OFF.

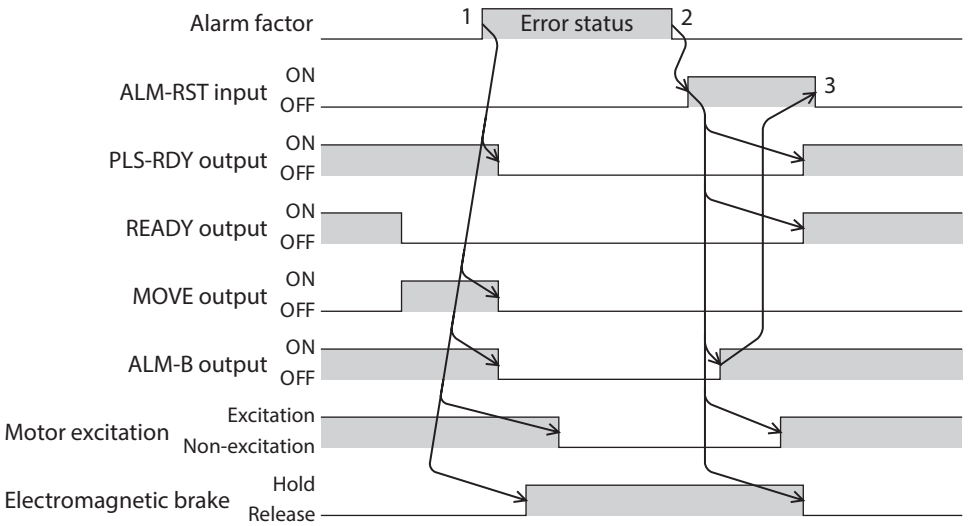

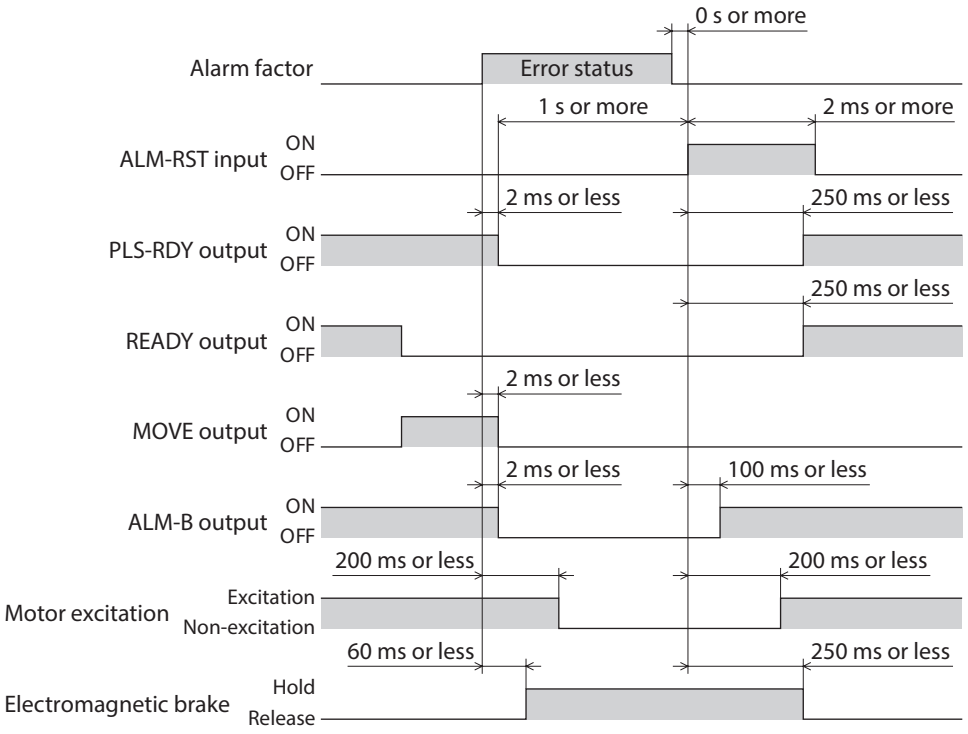

3 Information

The driver is equipped with a function to generate information output before an alarm is generated.
This function can be utilized for periodic maintenance of equipment by setting a suitable value in the parameter of each information.
For example, utilizing the "Motor temperature information" parameter can prevent equipment malfunction or production stoppage due to motor overheat. In addition, the "Tripmeter information" parameter can be utilized as a reference to do maintenances every time a certain travel distance is reached.

■ Status when information is generated

- **Information bit output**

  If information is generated, a bit output (INFO-∗∗ output) of the corresponding information is turned ON.
  A desired output signal can be assigned to the INFO-USRIO output among bit outputs and used. If the assigned output signal is turned ON, the INFO-USRIO output is also turned ON. (Details of bit output ⇨p.180)

- **INFO output**

  If information is generated, the INFO output is turned ON.

- **LED indicator**

  If information is generated, the PWR/ALM LED will simultaneously blink in red and green twice. (Red and green colors may overlap and it may be visible to orange.)

- **Motor operation**

  The motor continues to operate during information unlike in the case of an alarm.

- **Parameter**

  Each information has a corresponding "INFO action" parameter. If the parameter is set to "0: No Info reflect," only the bit output of information is turned ON, and the INFO output and LED are not changed.

Related parameters

Parameter ID		Name	Description	Initial value
Dec	Hex			
416	01A0h	Driver temperature information (INFO-DRVTMP)	Sets the generation condition of the driver temperature information (INFO-DRVTMP). **[Setting range]** 40 to 85 °C	85
417	01A1h	Overload time information (INFO-OLTIME)	Sets the generation condition of the overload time information (INFO-OLTIME). **[Setting range]** 1 to 300 (1=0.1 s)	50
418	01A2h	Speed information (INFO-SPD)	Sets the generation condition of the speed information (INFO-SPD). **[Setting range]** 0: Disable 1 to 12,000 r/min	0
421	01A5h	Position deviation information (INFO-POSERR)	Sets the generation condition of the position deviation information (INFO-POSERR). **[Setting range]** 1 to 30,000 (1=0.01 rev)	300
424	01A8h	Motor temperature information (INFO-MTRTMP)	Sets the generation condition of the motor temperature information (INFO-MTRTMP). **[Setting range]** 40 to 120 °C	85

Parameter ID		Name	Description	Initial value
Dec	Hex			
425	01A9h	Overvoltage information (INFO-OVOLT) [AC power input driver]	Sets the generation condition of the overvoltage information (INFO-OVOLT). [AC power input driver only] **[Setting range]** 120 to 450 V	435
426	01AAh	Undervoltage information (INFO-UVOLT) [AC power input driver]	Sets the generation condition of the undervoltage information (INFO-UVOLT). [AC power input driver only] **[Setting range]** 120 to 280 V	120
427	01ABh	Overvoltage information (INFO-OVOLT) [DC power input driver]	Sets the generation condition of the overvoltage information (INFO-OVOLT). [DC power input driver only] **[Setting range]** 150 to 630 (1=0.1 V)	630
428	01ACh	Undervoltage information (INFO-UVOLT) [DC power input driver]	Sets the generation condition of the undervoltage information (INFO-UVOLT). [DC power input driver only] **[Setting range]** 150 to 630 (1=0.1 V)	180
431	01AFh	Tripmeter information (INFO-TRIP)	Sets the generation condition of the tripmeter information (INFO-TRIP). **[Setting range]** 0: Disable 1 to 2,147,483,647 (1=0.1 kRev)	0
432	01B0h	Odometer information (INFO-ODO)	Sets the generation condition of the odometer information (INFO-ODO). **[Setting range]** 0: Disable 1 to 2,147,483,647 (1=0.1 kRev)	0
433	01B1h	Cumulative load 0 information (INFO-CULD0)	Sets the generation condition of the cumulative load 0 information (INFO-CULD0). **[Setting range]** 0 to 2,147,483,647	0
434	01B2h	Cumulative load 1 information (INFO-CULD1)	Sets the generation condition of the cumulative load 1 information (INFO-CULD1). **[Setting range]** 0 to 2,147,483,647	0
435	01B3h	Cumulative load value auto clear	Clears the cumulative load when operation is started (ON edge of the MOVE output). **[Setting range]** 0: Disable 1: Enable	1
436	01B4h	Cumulative load value count divisor	Sets the divisor of the cumulative load. **[Setting range]** 1 to 32,767	1
444	01BCh	INFO-USRIO output selection	Selects the output signal to be checked in the INFO-USRIO output. **[Setting range]** Output signal⇨p.163	128: CONST-OFF
445	01BDh	INFO-USRIO output inversion	Sets the output logic of the INFO-USRIO output. **[Setting range]** 0: Not invert 1: Invert	0

Parameter ID		Name	Description	Initial value
Dec	Hex			
446	01BEh	Information LED condition	Sets the LED status when information is generated. **[Setting range]** 0: Disable (LED does not blink) 1: Enable (LED blinks)	1
447	01BFh	Information auto clear	When the cause of information is eliminated, the INFO output and the bit output of the corresponding information are turned OFF automatically. **[Setting range]** 0: Disable (not turned OFF automatically) 1: Enable (turned OFF automatically)	1
1952	07A0h	INFO action (Assigned I/O status information (INFO-USRIO))	Sets the bit output, the INFO output, and the LED status when information is generated. **[Setting range]** 0: No Info reflect (Only the bit output is ON.) 1: Info reflect (The bit output and the INFO output are ON and the LED blinks.)	1
1953	07A1h	INFO action (Position deviation information (INFO-POSERR))		
1954	07A2h	INFO action (Driver temperature information (INFO-DRVTMP))		
1955	07A3h	INFO action (Motor temperature information (INFO-MTRTMP))		
1956	07A4h	INFO action (Overvoltage information (INFO-OVOLT))		
1957	07A5h	INFO action (Undervoltage information (INFO-UVOLT))		
1958	07A6h	INFO action (Overload time information (INFO-OLTIME))		
1960	07A8h	INFO action (Speed information (INFO-SPD))		
1961	07A9h	INFO action (Start operation error information (INFO-START))		
1962	07AAh	INFO action (Start ZHOME error information (INFO-ZHOME))		
1963	07ABh	INFO action (PRESET request information (INFO-PR-REQ))		
1965	07ADh	INFO action (Electronic gear setting error information (INFO-EGR-E))		
1966	07AEh	INFO action (Wrap setting error information (INFO-RND-E))		
1968	07B0h	INFO action (Forward operation prohibition information (INFO-FW-OT))		
1969	07B1h	INFO action (Reverse operation prohibition information (INFO-RV-OT))		
1970	07B2h	INFO action (Cumulative load 0 information (INFO-CULD0))		
1971	07B3h	INFO action (Cumulative load 1 information (INFO-CULD1))		
1972	07B4h	INFO action (Tripmeter information (INFO-TRIP))		
1973	07B5h	INFO action (Odometer information (INFO-ODO))		
1980	07BCh	INFO action (Start operation restricted mode information (INFO-DSLMTD))		

Parameter ID		Name	Description	Initial value
Dec	Hex			
1981	07BDh	INFO action (I/O test mode information (INFO-IOTEST))	Sets the bit output, the INFO output, and the LED status when information is generated. **[Setting range]** 0: No Info reflect (Only the bit output is ON.) 1: Info reflect (The bit output and the INFO output are ON and the LED blinks.)	1
1982	07BEh	INFO action (Configuration request information (INFO-CFG))		
1983	07BFh	INFO action (Reboot request information (INFO-RBT))		

3-1 Information history

Up to 16 generated information items are stored in the RAM in order of the latest to oldest. Information items stored as the information history are the information code, generation time, and contents of information.
The information history can be read or cleared when one of the following is performed.

- Read the information history by the monitor command via EtherNet/IP.
- Clear the information history by the maintenance command via EtherNet/IP.
- Read and clear the information history using the **MEXE02**.

Note Information history is stored in the RAM, so they are cleared when the control power supply of the driver is turned OFF.

3-2 Information list

Information item	Information bit output signal	Cause	Reset condition
Assigned I/O status	INFO-USRIO	The I/O signal set in the "INFO-USRIO output selection" parameter was turned ON.	The I/O signal set in the "INFO-USRIO output selection" parameter was turned OFF.
Position deviation	INFO-POSERR	The deviation between the command position and the feedback position exceeded the value set in the "Position deviation information" parameter in the motor output shaft.	The deviation between the command position and the feedback position fell below the value set in the "Position deviation information" parameter in the motor output shaft.
Driver temperature	INFO-DRVTMP	The internal temperature of the driver exceeded the value set in the "Driver temperature information" parameter.	The internal temperature of the driver fell below the setting value of the "Driver temperature information" parameter.
Motor temperature	INFO-MTRTMP	The detection temperature of the encoder exceeded the value set in the "Motor temperature information" parameter.	The detection temperature of the encoder fell below the value set in the "Motor temperature information" parameter.
Overvoltage	INFO-OVOLT	• The voltage of the main power supply exceeded the value set in the "Overvoltage information" parameter. • A large load inertia was suddenly stopped. • Vertical operation (elevating operation) was performed.	The voltage of the main power supply fell below the value set in the "Overvoltage information" parameter.
Undervoltage	INFO-UVOLT	• The voltage of the main power supply fell below the value set in the "Undervoltage information" parameter. • The main power supply was shut off momentarily or a voltage shortage was generated.	The voltage of the main power supply exceeded the value set in the "Undervoltage information" parameter.

Information item	Information bit output signal	Cause	Reset condition
Overload time	INFO-OLTIME	A load exceeding the maximum torque was applied for a time period exceeding the value set in the "Overload time information" parameter.	The overload counter fell below the value set in the "Overload time information" parameter.
Speed	INFO-SPD	The feedback speed of the motor exceeded the value set in the "Speed information" parameter.	The feedback speed of the motor fell below the value set in the "Speed information" parameter.
Start operation error	INFO-START	• The operation start signal in the direction having been stopped by the FW-BLK input or RV-BLK input was turned ON. • The operation start signal in the direction having been stopped by the FW-LS input or RV-LS input was turned ON. • The operation start signal in the direction having been stopped by the software limit was turned ON. • When operation could not be executed (e.g., the READY output was OFF), the operation start signal was turned ON.	Operation was started normally.
Start ZHOME error	INFO-ZHOME	• When the position coordinate was not set (the ABSPEN output was OFF), the ZHOME input was turned ON. • When the motor was used with the electrical home coordinate system (the EL-PRST input was ON), return-to-home operation was performed.	Operation was started normally.
Preset request	INFO-PR-REQ	Preset was executed by the position preset or return-to-home operation.	Preset was completed.
Electronic gear setting error	INFO-EGR-E	The resolution set in the "Electronic gear" parameter was out of the specification.	The resolution was set in the range of the specification.
Wrap setting error	INFO-RND-E	The resolution and the "Initial coordinate generation & wrap setting range" parameter were inconsistent.	The "Initial coordinate generation & wrap setting range" parameter was set in the range of the specification.
Forward operation prohibition	INFO-FW-OT	• The positive software limit was exceeded. • Either the FW-LS input or the FW-BLK input was turned ON.	The position coordinate of the motor was in the range of the positive software limit, and in addition, both the FW-LS input and the FW-BLK input were turned OFF.
Reverse operation prohibition	INFO-RV-OT	• The negative software limit was exceeded. • Either the RV-LS input or the RV-BLK input was turned ON.	The position coordinate of the motor was in the range of the negative software limit, and in addition, both the RV-LS input and the RV-BLK input were turned OFF.
Cumulative load 0	INFO-CULD0	The cumulative load exceeded the value set in the "Cumulative load 0 information" parameter.	The cumulative load fell below the value set in the "Cumulative load 0 information" parameter.
Cumulative load 1	INFO-CULD1	The cumulative load exceeded the value set in the "Cumulative load 1 information" parameter.	The cumulative load fell below the value set in the "Cumulative load 1 information" parameter.

Information item	Information bit output signal	Cause	Reset condition
Tripmeter	INFO-TRIP	The travel distance of the motor exceeded the value set in the "Tripmeter information" parameter.	After one of the following operation was performed, the travel distance (Tripmeter) of the motor fell below the value set in the "Tripmeter information" parameter. • The "Tripmeter information" parameter was set again. • The "Clear tripmeter" of the maintenance command was executed.
Odometer	INFO-ODO	The cumulative travel distance of the motor exceeded the value set in the "Odometer information" parameter.	After the following operation was performed, the cumulative travel distance (Odometer) of the motor fell below the value set in the "Odometer information" parameter. • The "Odometer information" parameter was set again.
Start operation restricted mode	INFO-DSLMTD	• "Teaching, remote operation" was executed using the **MEXE02**. • Configuration was executed. • Data was written to the driver from the **MEXE02**. • "Restored to the factory setting" was executed with the **MEXE02**.	• Teaching, remote operation was canceled. • Configuration was complete. • Writing data was complete. • Data was restored to the factory setting.
I/O test mode	INFO-IOTEST	• "I/O test" was executed with the **MEXE02**. • Configuration was executed.	• The I/O test mode was canceled. • Configuration was complete.
Configuration request	INFO-CFG	The parameter that required executing the configuration was changed.	Configuration was executed.
Reboot request	INFO-RBT	The parameter that required rebooting was changed.	Reboot was executed.

memo If the "Preset request" information was generated for 100 ms or more in a state where the "Information auto clear" parameter was set to disable, the preset may have been failed. There are the following two possible reasons that the preset was failed.
· The ABZO sensor is not connected to the driver.
· The preset was executed in a state where the position deviation between the command position and the feedback position was 1.8° or more.

4 Troubleshooting and remedial actions

In motor operation, the motor or driver may not function properly due to an improper setting or wrong connection. When the motor cannot be operated properly, refer to the contents provided in this chapter and take an appropriate remedial action.
If the problem persists, contact your nearest Oriental Motor sales office.

This chapter describes problems that may occur in operation other than the initial settings. Refer to the OPERATING MANUAL AZ Function Edition for these contents.

Phenomenon	Possible cause	Remedial action
• The motor is not excited. • The motor output shaft can be moved by hand.	Connection error of the motor cable.	Check the motor connection.
	The FREE input is being ON.	Turn the FREE input OFF.
The motor has a holding torque even if it is put into a non-excitation state.	Effect of dynamic brake.	If the motor is put into a non-excitation state using the C-ON input or the STOP-COFF input, the motor windings is in a state of being short-circuited in the driver, and the holding torque larger than when the power is shut off is generated (dynamic brake). To release the dynamic brake, shut off the power or turn the FREE input ON.
The motor does not operate.	When an electromagnetic brake motor is used, the electromagnetic brake is in a holding state.	Check the connection of the electromagnetic brake.
	The STOP input is being ON.	Turn the STOP input OFF.
	The position (travel amount) is not set in the operation data when positioning operation is performed.	Check the operation data.
	When JOG operation, high-speed JOG operation, or continuous macro operation is performed, the input in the forward direction and that in the reverse direction are simultaneously ON.	Turn both inputs in the forward direction and the reverse direction OFF, and then turn either one ON.
The motor rotates in the direction opposite to the specified direction.	The "Motor rotation direction" parameter is set wrongly.	Check the setting of the "Motor rotation direction" parameter.
The gearhead output shaft rotates in the direction opposite to the motor output shaft.	The geared motor that rotates in the direction opposite to the motor shaft is used.	• With **TS** geared type, the gear output shaft rotates in the direction opposite to the motor output shaft when the gear ratio is 20 or 30. • With Harmonic geared type, the gear output shaft always rotates in the direction opposite to the motor output shaft.
Motor operation is unstable.	Connection error in the motor cable or the power supply cable.	Check the connections between the driver, the motor, and the main power supply.
	The value set in the "Base current" parameter is too low.	Check the setting of the "Base current" parameter. If the motor current value is low with respect to a load, the torque will also be low and the operation will be unstable.
Motor vibration is too large.	Load is too small.	Lower the current with the "Base current" parameter. If the motor output torque is too large relative to the load, vibration will increase.
The electromagnetic brake is not released.	The power is not supplied to the electromagnetic brake.	Check the connection of the electromagnetic brake.

memo Check the alarm message using EtherNet/IP or the **MEXE02** when the alarm is being generated.

7 Reference materials

◆Table of contents

1 Timing chart 186

2 Specifications 187

2-1 General specifications.....187

2-2 Product specifications.....188

3 Regulations and standards.....190

3-1 UL Standards, CSA Standards.....190

3-2 CE Marking / UKCA Marking (AC power input driver).....190

3-3 CE Marking / UKCA Marking (DC power input driver).....192

3-4 Functional safety.....192

1 Timing chart

■ Power ON

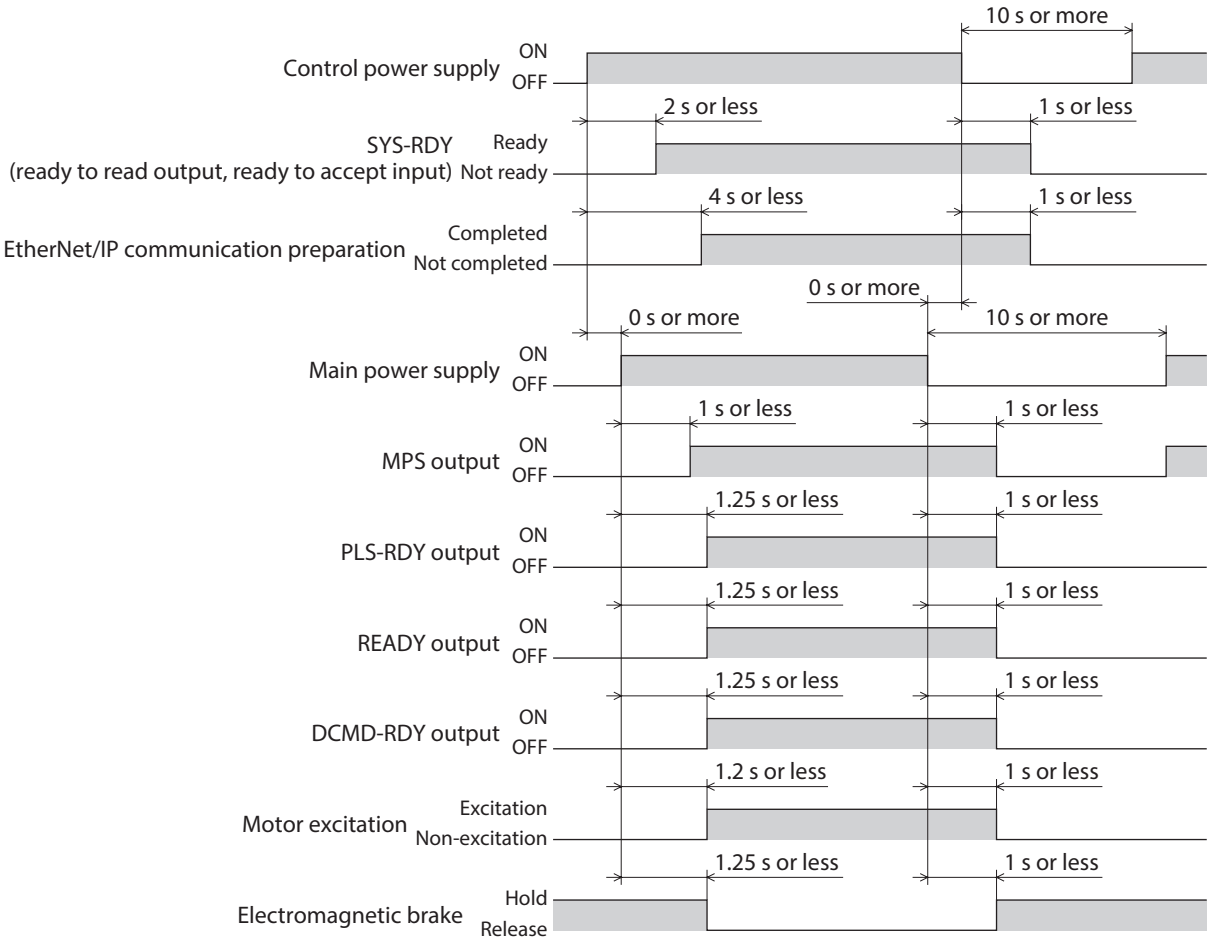

memo There are two types of timings when an output signal is turned ON.
· A signal is turned ON by only turning on the control power supply.
· A signal is turned ON by turning on the control power supply and the main power supply.

2 Specifications

2-1 General specifications

■ AC power input driver

Degree of protection		IP10
Operating environment	Ambient temperature	0 to +55 °C (+32 to +131 °F) * (non-freezing)
	Humidity	85 % or less (non-condensing)
	Altitude	Up to 1,000 m (3,300 ft.) above sea level
	Surrounding atmosphere	No corrosive gas, dust, water, or oil.
Storage environment Shipping environment	Ambient temperature	−25 to +70 °C (−13 to +158 °F) (non-freezing)
	Humidity	85 % or less (non-condensing)
	Altitude	Up to 3,000 m (10,000 ft.) above sea level
	Surrounding atmosphere	No corrosive gas, dust, water, or oil.
Insulation resistance		100 MΩ or more when 500 VDC megger is applied between the following places: · Protective Earth Terminal - Main power supply input terminal · Encoder connector - Main power supply input terminal · I/O signal connector - Main power supply input terminal
Dielectric strength		Sufficient to withstand the specified voltage applied between the following places for 1 minute: · Protective Earth Terminal - Main power supply input terminal 1.5 kVAC 50/60 Hz · Encoder connector - Main power supply input terminal 1.8 kVAC 50/60 Hz · I/O signal connector - Main power supply input terminal 1.8 kVAC 50/60 Hz

* When installing a driver on a heat sink [material: aluminum, 200×200×2 mm (7.87×7.87×0.08 in.) or equivalent].

■ DC power input driver

Degree of protection		IP20
Operating environment	Ambient temperature	0 to +50 °C (+32 to +122 °F) (non-freezing)
	Humidity	85 % or less (non-condensing)
	Altitude	Up to 1,000 m (3,300 ft.) above sea level
	Surrounding atmosphere	No corrosive gas, dust, water, or oil.
Storage environment Shipping environment	Ambient temperature	−25 to +70 °C (−13 to +158 °F) (non-freezing)
	Humidity	85 % or less (non-condensing)
	Altitude	Up to 3,000 m (10,000 ft.) above sea level
	Surrounding atmosphere	No corrosive gas, dust, water, or oil.
Insulation resistance		100 MΩ or more when 500 VDC megger is applied between the following places: · Frame Ground Terminal - Power supply input terminal *

* The main power supply input terminals and the control power supply input terminals are not electrically insulated. Check using either of terminals.

2-2 Product specifications

■ AC power input driver

Driver model		AZD-AEP	AZD-CEP
Main power supply	Input voltage	Single-phase 100-120 VAC −15 to +6 % 50/60 Hz	• Single-phase 200-240 VAC −15 to +6 % 50/60 Hz • Three-phase 200-240 VAC −15 to +6 % 50/60 Hz
	Input current	2.7 to 6.4 A *1	Single-phase: 1.6 to 3.9 A *1 Three-phase: 1.0 to 2.3 A *1
Control power supply	Input voltage	24 VDC±5 % *2	
	Input current	0.25 A (0.5 A) *3	
Interface	Pulse input	• 3 to 5.25 VDC Number of input points: 2, photocoupler • Maximum input pulse frequency Line driver output of host controller: 1 MHz (duty cycle 50 %) Open-collector output of host controller: 250 kHz (duty cycle 50 %)	
	Control input	Number of input points: 6, photocoupler	
	Pulse output	Number of output points: 2, line driver	
	Control output	Number of output points: 6, photocoupler/open collector	
	Power removal signal input	Number of input points: 2, photocoupler	
	Power removal monitor output	Number of output point: 1, photocoupler/open collector	
	Field network	EtherNet/IP	

*1 The input current varies depending on the motor combined. Check on p.29

*2 When an electromagnetic brake motor is used, the input voltage is 24 VDC±4 % if the wiring distance between the cable type motor and the driver is extended to 20 m (65.6 ft.) using our cable.

*3 The value in parentheses ( ) is the one when the electromagnetic brake motor is connected. The **AZM46** type is 0.33 A.

■ DC power input driver

Driver model		AZD-KEP2
Main power supply	Input voltage	• 24 VDC±5 % • 48 VDC±5 %
	Input current	0.4 to 3.3 A *1
Control power supply	Input voltage	24 VDC±5 % *2
	Input current	0.15 A (0.4 A) *3
Interface	Pulse input	• 3 to 5.25 VDC Number of input points: 2, photocoupler • Maximum input pulse frequency Line driver output of host controller: 1 MHz (duty cycle 50 %) Open-collector output of host controller: 250 kHz (duty cycle 50 %)
	Control input	Number of input points: 6, photocoupler
	Pulse output	Number of output points: 2, line driver
	Control output	Number of output points: 6, photocoupler/open collector
	Power removal signal input	Number of input points: 2, photocoupler
	Power removal monitor output	Number of output point: 1, photocoupler/open collector
	Field network	EtherNet/IP

*1 The input current varies depending on the motor combined. Check on p.71.
*2 When an electromagnetic brake motor is used, the input voltage is 24 VDC±4 % if the wiring distance between the cable type motor and the driver is extended to 20 m (65.6 ft.) using our cable.
*3 The value in parentheses ( ) is the one when the electromagnetic brake motor is connected. The **AZM46** type is 0.23 A.

3 Regulations and standards

3-1 UL Standards, CSA Standards

This product is recognized by UL under UL and CSA Standards.
The driver is not provided with the electronic motor overload protection and the motor overtemperature protection specified in UL and CSA Standards.

3-2 CE Marking / UKCA Marking (AC power input driver)

This product is affixed with the marks under the following directives/regulations.
EU Declaration of Conformity can be downloaded from Download Page of the product in Oriental Motor Website (https://www.orientalmotor.eu/eu).

- EU Low Voltage Directive / UK Electrical Equipment (Safety) Regulation
- EU Machinery Directive / UK Machinery Regulation
- EU EMC Directive / UK EMC Regulation
- EU RoHS Directive/UK RoHS Regulation

■ EU Low Voltage Directive / UK Electrical Equipment (Safety) Regulation

● **Installation conditions**

Overvoltage category	II
Pollution degree	2
Degree of protection	IP10
Protection against electric shock	Class I Equipment

- This product cannot be used in IT power distribution systems.
- Isolate the motor cable, the power supply cable and other drive cables from the signal cables by means of double insulation.
- The temperature of the driver's heat sink may exceed 90 °C (194 °F) depending on the driving condition. Observe the followings.
  - Be sure to perform test operation and check the driver temperature.
  - Do not use the driver near combustibles.
  - Do not touch the driver while operating.
- Use a circuit breaker conforming to EN or IEC Standards.
- The driver is not provided with the electronic motor overload protection and the motor overtemperature protection specified in EN Standards.
- The driver is not provided with the ground fault protection circuit. Wire the product in accordance with "Example of wiring to power supply considering ground fault protection" on p.191. Also observe the followings.
  - Earth leakage breaker: Rated current 15 A, rated sensitivity current 30 mA
  - When connecting to a power supply of Overvoltage category III, use an insulation transformer to ground its secondary side (N for single-phase, neutral point for three-phase).
  - Fault loop impedance: Equal to or less than the value in table

Power supply specifications of driver	Fault loop impedance
Single-phase 100-120 VAC	500 Ω
Single-phase 200-240 VAC Three-phase 200-240 VAC (Delta connection)	1,000 Ω
Three-phase 200-240 VAC (Star connection)	577 Ω

- **Example of wiring to power supply considering ground fault protection**

Single-phase 100-120 VAC, Single-phase 200-240 VAC

- TN power distribution systems

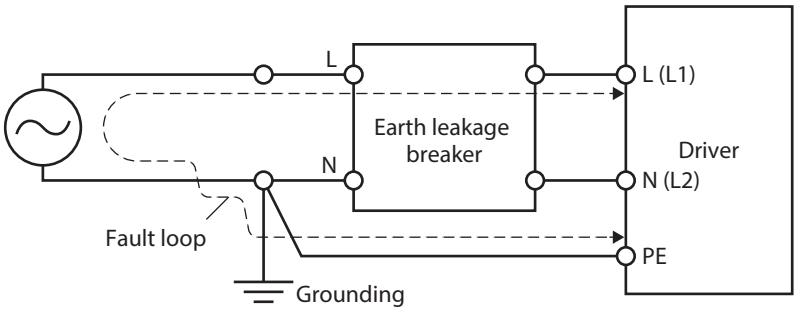

- TT power distribution systems

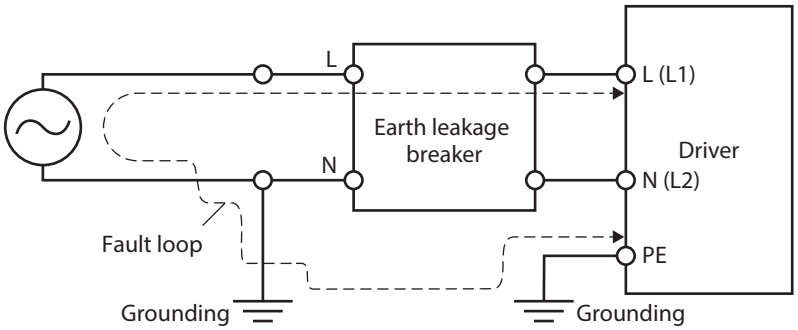

Three-phase 200-240 VAC

- TN power distribution systems

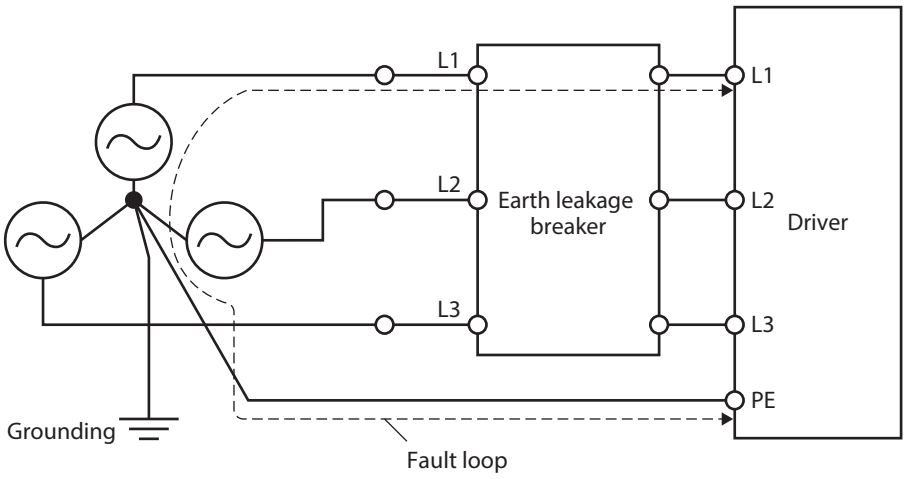

- TT power distribution systems

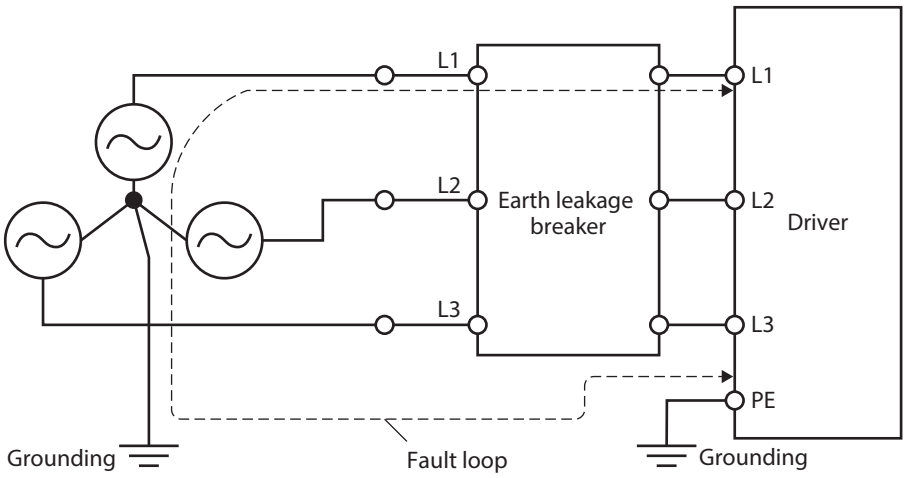

■ EU EMC Directive / UK EMC Regulation

Refer to "4-10 Conformity to the EMC Directive/Regulations" on p.37 for details about conformity.

■ EU RoHS Directive/UK RoHS Regulation

This product does not contain the substances exceeding the restriction values.

3-3 CE Marking / UKCA Marking (DC power input driver)

This product is affixed with the marks under the following directives/regulations.
EU Declaration of Conformity can be downloaded from Download Page of the product in Oriental Motor Website (https://www.orientalmotor.eu/eu).

- EU Machinery Directive / UK Machinery Regulation
- EU EMC Directive / UK EMC Regulation
- EU RoHS Directive/UK RoHS Regulation

■ EU EMC Directive / UK EMC Regulation

Refer to "4-8 Conformity to the EMC Directive/Regulations" on p.79 for details about conformity.

■ EU RoHS Directive/UK RoHS Regulation

This product does not contain the substances exceeding the restriction values.

3-4 Functional safety

This product is certified by TÜV SÜD Product Service GmbH and affixed with the TÜV SÜD Mark. It is not a certified product if the TÜV SÜD Mark is not affixed.

■ DC power input driver

- Overvoltage category: I
- Pollution degree: 2
- Vibration resistance: 10 to 57 Hz, amplitude 0.075 mm
  57 to 150 Hz, acceleration 9.8 m/s^2 (1 G)
- Impact resistance: 50 m/s^2 (5 G), 30 ms
- The driver does not provide the electronic motor overload protection and motor overtemperature protection that are specified in the EN Standards.
- Install the driver in an enclosure whose degree of protection is IP54 minimum.
- Use a power supply that is certified as compatible with SELV for the control power supply.

- Unauthorized reproduction or copying of all or part of this manual is prohibited.
  If a new copy is required to replace an original manual that has been damaged or lost, please contact your nearest Oriental Motor sales office.
- Oriental Motor shall not be liable whatsoever for any problems relating to industrial property rights arising from use of any information, circuit, equipment or device provided or referenced in this manual.
- Characteristics, specifications and dimensions are subject to change without notice.
- While we make every effort to offer accurate information in the manual, we welcome your input. Should you find unclear descriptions, errors or omissions, please contact your nearest Oriental Motor sales office.
- ***Orientalmotor***, α_{STEP}, and ABZO sensor are registered trademarks or trademarks of Oriental Motor Co., Ltd., in Japan and other countries.
  EtherNet/IP™ is a trademark of ODVA (Open DeviceNet Vendor Association).
  Other product names and company names mentioned in this manual may be registered trademarks or trademarks of their respective companies and are hereby acknowledged. The third-party products mentioned in this manual are recommended products, and references to their names shall not be construed as any form of performance guarantee. Oriental Motor is not liable whatsoever for the performance of these third-party products.

© Copyright ORIENTAL MOTOR CO., LTD. 2025

Published in July 2026

• Please contact your nearest Oriental Motor office for further information.

ORIENTAL MOTOR U.S.A. CORP.
Technical Support Tel:800-468-3982
8:30am EST to 5:00pm PST (M-F)

ORIENTAL MOTOR (EUROPA) GmbH
Schiessstraße 44, 40549 Düsseldorf, Germany
Technical Support Tel:00 800/22 55 66 22

ORIENTAL MOTOR (UK) LTD.
Blythe Valley Business Park,
Central Blvd Blythe Valley Park,
Solihull B90 8AG, United Kingdom
Tel:+44-1926-671220

ORIENTAL MOTOR (FRANCE) SARL
Tel:+33-1 47 86 97 50

ORIENTAL MOTOR ITALIA s.r.l.
Tel:+39-02-93906347

ORIENTAL MOTOR ASIA PACIFIC PTE. LTD.
Singapore
Tel:1800-842-0280

ORIENTAL MOTOR (MALAYSIA) SDN. BHD.
Tel:1800-806-161

ORIENTAL MOTOR (THAILAND) CO., LTD.
Tel:1800-888-881

ORIENTAL MOTOR (INDIA) PVT. LTD.
Tel:1800-120-1995 (For English)
1800-121-4149 (For Hindi)

TAIWAN ORIENTAL MOTOR CO., LTD.
Tel:0800-060708

SHANGHAI ORIENTAL MOTOR CO., LTD.
Tel:400-820-6516

INA ORIENTAL MOTOR CO., LTD.
Korea
Tel:080-777-2042

ORIENTAL MOTOR CO., LTD.
4-8-1 Higashiueno, Taito-ku, Tokyo
110-8536 Japan
Tel:+81-3-6744-0361
www.orientalmotor.co.jp/ja